Workshop Manual

TE 250-310-450-510/2009-I.E.,
TC 250-450-510/2009,
TXC 250-450-510/2009 (only USA),
SMR 450-510 2009-I.E.

Part. N. 8000 H0368 (09-2008)

Husqvarna

To the best knowledge of HUSQVARNA MOTORCYCLES S.R.L. - Varese, Inc. the material contained herein is accurate as of the date this pubblication was approved for printing. Cagiva Motor S.p.a. - Varese, Inc. reserves the right to change specifications, equipment, or designs at any time without notice and without incurring obligation. Illustrations in this manual are merely for demonstration purposes and could not exactly match the detail described.No part of this manual can de reproduced without permission in writing of the copyright holder.

1st Edition (09-2008)

Workshop Manual

TE 250-310-450-510/2009-I.E., TC 250-450-510/2009, TXC 250-450-510/2009 (only USA), SMR 450-510/2009-I.E.

Copyright by
HUSQVARNA MOTORCYCLES S.R.L.
BMW Group
Servizio Assistenza Tecnica
Via Nino Bixio, 8
21024 Biandronno
(Varese) - Italy
tel. ++39 0332 75.61.11
fax ++39 0332 756 558
www.husqvarna-motorcycles.com

1st Edition (09-2008)
Printed in Italy
Print No. N° 8000 H0368

VALIDITY (from vehicle identification number)

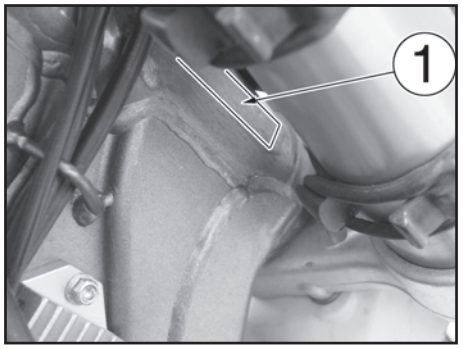

1. Vehicle identification number

TE 250: ZKHA200AA9V000001
TE 310: ZKHA204AA9V000001
TE 450: ZKHA202AA9V000001
TE 510: ZKHA203AA9V000001
TE 250 (USA): ZKHKBECF*9V100001
TE 310 (USA): ZKHKBEDF*9V100001
TE 450 (USA): ZKHKBEFF*9V100000
TE 510 (USA): ZKHKBEHF*9V100000
TC 450: ZKHA202AA9V050001
TC 510: ZKHA203AA9V050001
TC 450 (USA): ZKHTC450*9V100000
TC 510 (USA): ZKHTC510*9V100000
TXC 250 (USA): ZKHTX250*9V000001
TXC 450 (USA): ZKHTX450*9V000001
TXC 510 (USA): ZKHTX510*9V000001
SMR 450: ZKHA202AB9V000001
SMR 510: ZKHA203AB9V000001

Foreword

This publication intended for **HUSQVARNA** Workshops has been prepared for the purpose of helping the authorized personnel in the maintenance and repair work of the motorcycles herewith dealt with. The perfect knowledge of the technical data contained herein is essential for a more complete professional training of the operator.
The paragraphs have been completed with schematic illustrations evidencing the subject concerned, in order to enable a more immediate understanding.
This manual contains information with particular meanings:

Accident prevention rules for the operator and for the personnel working near by.

Possibility of damaging the vehicle and/or its components.

Additional information concerning the operation under way.

Useful suggestions

HUSQVARNA suggests, in order to prevent troubles and in order to have an excellent final result, to generically comply with the following instructions:

– in case of repair work, weigh the impressions of the Customer who complains about the improper operation of the motorcycle, and formulate proper clearing questions about the symptoms of the trouble.
– detect clearly the cause of the trouble. This manual gives the theoretical bases which however shall be integrated by the personal experience and by the attendance to training courses periodically organized by **HUSQVARNA**.
– rationally plan the repair work in order to prevent dead time as for instance procurement of spare parts, tool preparation, etc.
– reach the component to be repaired and perform only the required operations.
  In this connection, it will be useful to consult the disassembly sequence contained in this manual.

General instructions for repair work

1 Always replace the seal rings and split pins with new components.
2 When loosening or tightening nuts or bolts, always start from the bigger ones or from the center. Lock at the prescribed torque wrench setting following a crossed run.
3 Always earmark the components or positions which could be mistaken one for another at the time of assembly.
4 Use original **HUSQVARNA** spare parts and the lubricants of the recommended brands.
5 Use special tools, where specified.
6 Consult the Service Bulletins as they may contain up-dated adjustment data and repair methodologies.

Summary

Chapter	Section
Foreword, summary	a
Important notices	b
General	A
Maintenance	B
Troubles and remedies	C
Settings and adjustments	D
General operations	E
Engine disassembly	F
Engine overhauling	G
Engine re-assembly	H
Front suspension	I
Rear suspension	J
Brakes	L
Electric system	M
Engine cooling system	N
"KITS" assembling instructions	O
Hydraulic control clutch	P
Optional Parts List	Q
Fuel injection system	S
Lubrication system	T
Specific tools	W
Torque wrench settings	X
Frame, wheels	Y
Notes for USA/CDN-AUS models	Z

NOTES

1) Where not otherwise specified, data and instructions refer to all models.

Section b

1) The **TC** and **TXC** models are guaranteed COMPETITION motorcycles exempt from functional defects, the suggested maintenance table for competition use is shown on chapter B.
2) **TE** and **SMR** are STREET LEGAL motorcycles (with LIMITED POWER ENGINE); they are guaranteed exempt from functional defects and covered with legal guarantee, if the STANDARD CONFIGURATION is maintained and the suggested maintenance table, shown on chapter B, is observed. If TE and SMR are transformed in COMPETITION MOTORCYCLES (with FULL POWER ENGINE), the suggested maintenance table for competition use is shown on chapter B.

IMPORTANT
The reference for recognition of the guarantee will be the MOTORCYCLE CONFIGURATION, as shown below:
A) STANDARD MOTORCYCLE, STREET LEGAL: with LIMITED POWER ENGINE
B) COMPETITION MOTORCYCLE, RACING USE: with FULL POWER ENGINE

* This motorcycles was not designed for long trips with the engine always at maximum rpm as can occur whilst travelling on roads or highways. Long trips at full throttle can cause severe damage to the engine.

* This motorcycles is setup for competition use and therefore guarantees maximum performance with the rider alone. It is thereby not recommended to use the vehicle on circuits or off-road with a passenger.

* ALWAYS keep in mind that these motorcycles have been designed strictly for competition use, that is, for conditions of usage very different from those presented on the road.

* In order to maintain the vehicle's "Guarantee of Functionality", the client must follow the maintenance program indicated in the chapter B by carrying out maintenance checks at authorized HUSQVARNA dealers. The cost for substituting parts and for the labour necessary in order to respect the maintenance plan, is charged to the client. The guarantee is EXTINGUISHED in the case where the motorcycle is rented.

Notes
References to the "left" or "right" of the motorcycle are in the sense of a person facing forwards.

Z: number of teeth

A: Austria
AUS: Australia
B: Belgium
BR: Brazil
CDN: Canada
CH: Switzerland
D: Germany
E: Spain
F: France
FIN: Finland
GB: Great Britain
I: Italy
J: Japan
USA: United States of America
Where not specified, alla the data and the instructions are referred to any and all the Countries.

Section A

Engine A.3
Timing system A.3
Fuel feeding A.3
Lubrication A.3
Cooling A.3
Ignition A.3
Starting A.3
Transmission A.4-A.5
Frame A.6
Suspensions A.6
Brakes A.6
Wheels A.6
Tires A.6
Ignition system- electric system A.7
Weights A.8
Overall dimensions A.8
Capacities A.9

ENGINE
4-stroke, single cylinder
Bore (250) ..... 2.99 in.
Bore (310) ..... 3.27 in.
Bore (450- 510) ..... 3.81 in.
Stroke (250-310) .....2.17 in.
Stroke (450) ..... 2.39 in.
Stroke (510) ..... 2.67 in.
Displacement (250) ..... 15.22 cu. in.
Displacement (310) ..... 18.16 cu. in.
Displacement (450) ..... 27.39 cu. in.
Displacement (510) ..... 30.56 cu. in.
Compression ratio 12.9:1

TIMING SYSTEM
Double overhead camshaft; 4 valves
Valve angle in relation to cylinder:
INLET ..... 12°
EXHAUST ..... 13°
Valve clearance with cold engine
INLET..... 0.004-0.006 in.
EXHAUST..... 0.006-0.008 in.

FUEL FEEDING
Type (TE-SMR) ..... to injection electronic, throttle body MIKUNI D42
Type (TC-TXC 250) ..... carburetor “Keihin” FCR-MX 37 with acceleration pump and T.P.S. (Throttle Position Sensor)
Type (TC-TXC 450-510)..... carburetor “Keihin” FCR-MX 41 with acceleration pump and T.P.S. (Throttle Position Sensor)
Dry type air filter

LUBRICATION
Type ..... Dry sump with two oil pump rotors and cartridge filter

COOLING
By fluid with double cooler (TC, TXC)
By fluid with double cooler and electric fan (TE-SMR)

IGNITION
CDI electronic (TC, TXC) inductive discharge (TE, SMR) with adjustable advance (digital control)
Spark plug type ..... "NGK" CR8EB
Spark plug gap ..... 0.7 mm

STARTING (TC) ..... kick start (with automatic decompressor)
STARTING (TE-TXC) ..... electric and kick start (with automatic decompressor)
STARTING (SMR) ..... electric (with automatic decompressor) *

*: kick start upon request

TRANSMISSION
Multi-plate clutch in oil bath, hydraulic control
5-speed (TC) or 6-speed (TE-SMR-TXC) gearbox, constant mesh gear type
Drive between engine and gearbox main shaft by straight toothed

Primary drive
Drive pinion gear (TC 250) ..... z 20
Drive pinion gear (TE-TXC 250, TE 310) ..... z 24
Drive pinion gear (450-510) ..... z 23

Clutch ring gear (TC 250) ..... z 67
Clutch ring gear (TE-TXC 250, TE 310) ..... z 88
Clutch ring gear (450-510) ..... z 63

Transmission ratio (TC 250) 3.350
Transmission ratio (TE-TXC 250, TE 310) 3.666
Transmission ratio (450-510) 2.739

Gearbox ratios (TE-SMR-TXC)
1st gear ..... 2.000 (z 28/14)
2nd gear ..... 1.611 (z 29/18)
3rd gear ..... 1.333 (z 24/18)
4th gear ..... 1.086 (z 25/23)
5 th gear ..... 0.920 (z 23/25)
6 th gear ..... 0.814 (z 22/27)

Gearbox ratios (TC)
1st gear ..... 1.866 (z 28/15)
2nd gear (250) ..... 1.529 (z 26/17)
2nd gear (450-510) ..... 1.444 (z 26/18)
3rd gear..... 1.263 (z 24/19)
4th gear ..... 1.086 (z 25/23)
5 th gear ..... 0.954 (z 21/22)

Final drive
Drive between gearbox and rear wheel by 5/8" x 1/4" chain (with OR for TE, TXC and SMR models).

Transmission sprocket (TE 250-310-450-510; TXC 250-450-510) ..... z 13
Transmission sprocket (TC 450) ..... z 14
Transmission sprocket (TC 250) ..... z 12
Transmission sprocket (TC 510) ..... z 14
Transmission sprocket (SMR 450-510) ..... z 14

Rear wheel sprocket (TE 250-310 TXC 250) ..... z 50
Rear wheel sprocket (TC 450) ..... z 50
Rear wheel sprocket (TC 250) ..... z 50
Rear wheel sprocket (TC 510 TE 450-510; TXC 450-510) ..... z 47
Rear wheel sprocket (SMR 450-510) ..... z 42

Transmission ratio (TE 250-310) 3.846
Transmission ratio (TE 450-510) 3.615
Transmission ratio (TC 250) 4.166
Transmission ratio (TC 450) 3.571
Transmission ratio (TC 510) 3.357
Transmission ratio (SMR 450-510) 3.000

Rear chain size ..... 5/8”x1/4”

Total drive ratios

1st gear (TE-TXC 250, TE 310)	28.205
1st gear (TE-TXC 450-510)	19.806
1st gear (TC 250)	26.055
1st gear (TC 450)	18.261
1st gear (TC 510)	17.159
1st gear (SMR 450-510)	15,339
2nd gear (TE-TXC 250, TE 310)	22.721
2nd gear (TE-TXC 450-510)	15.955
2nd gear (TC 250)	21.348
2nd gear (TC 450)	14.130
2nd gear (TC 510)	13.283
2nd gear (SMR 450-510)	12,356
3rd gear (TE-TXC 250, TE 310)	18.803
3rd gear (TE-TXC 450-510)	13.204
3rd gear (TC 250)	17.631
3rd gear (TC 450)	12.357
3rd gear (TC 510)	11.616
3rd gear (SMR 450-510)	10,226
4th gear (TE-TXC 250, TE 310)	15.329
4th gear (TE-TXC 450-510)	10.764
4th gear (TC 250)	15.172
4th gear (TC 450)	10.633
4th gear (TC 510)	9.995
4th gear (SMR 450-510)	8,336
5th gear (TE-TXC 250, TE 310)	12.974
5th gear (TE-TXC 450-510)	9.111
5th gear (TC 250)	13.324
5th gear (TC 450)	9.338
5th gear (TC 510)	8.778
5th gear (SMR 450-510)	7,056
6th gear (TE-TXC 250, TE 310)	11.491
6th gear (TE-TXC 450-510)	8.069
6th gear (SMR 450-510)	6,249

FRAME
Steel single tube cradle (round, rectangular and ellipsoidal tubes, branching off into two parts approximately at the exhaust level), rear frame in light alloy
Forward travel (in.) ..... 4.17 (TE-TXC); 4.10 (TC); 3.27 (SMR)

SUSPENSIONS
Front
“MARZOCCHI” Overturned forkrod telehydraulic fork with advanced pin; forkrods 1.97 in. diameter; hydraulic brake adjustment both in compression and extension
Axle travel on leg axis (in.) ..... 11.81 (TE, TC, TXC); 9.84 (SMR)

Rear
Swinging arm in light alloy with progressive damping, “SACHS” hydraulic mono-shock absorber with helical spring.
Hydraulic brake and spring preloading adjustment both in compression (DOUBLE) and in extension.
Wheel travel (in.) ..... 11.65 (TC-TXC-TE); 11.41 (SMR)

BRAKES
Front
Drilled fixed disc 10.24 in. dia. “wave” type, with floating caliper (TE, TC, TXC); drilled floating disc 12.6 in. dia. (SMR) with radial fixed caliper
Pads area ..... 5.18 sq. in. (TE, TC); 6.48 sq. in. (SMR)
Independent hydraulic circuit and pump with control on the handlebar right side
Rear
Floating drilled disc 9.45 in. (“wave” type for TE and TC), with floating caliper
Pads area ..... 3.64 sq. in.
Independent hydraulic circuit; controlled by pedal and pump on the motorcycle right side.

WHEELS
Rims
Front (TE, TC, TXC) ..... "TAKASAGO“ Excel in light alloy: 1.6x21”
Front (SMR) ..... "SANREMO" in light alloy: 3.50x17”
Rear (TE, TXC) ..... "TAKASAGO“ Excel in light alloy: 2.15x18”
Rear (TC) ..... "TAKASAGO“ Excel in light alloy: 1.85x19”(250); 2.15x19”(450-510)
Rear (SMR) ..... "SANREMO" in light alloy: 4.25x17”

TIRES
Front
(TE-TXC) ..... "Michelin" ENDURO COMP. 3 - "Pirelli" MT 83 Scorpion - "Dunlop" 54R-D907; 90/90x21"
(TC) ..... "Pirelli" 51R-MT 32A; 80/100 x 21”
(SMR) ..... "Pirelli" MTR 21 DRAGON-EVO; 120/70-17”
Rear
(TE-TXC) ..... "Michelin" ENDURO COMP. 3 - "Pirelli" MT 83 Scorpion - "Dunlop" 70R-D907; 120/90x18” (250); 140/80x18” (450-510)
(TC) ..... "Pirelli" NHS (62) MT 32; 100/90x19” (250); 110/90x19” (450-510)
(SMR) ..... "Pirelli" MTR 22 DRAGON-EVO; 150/60x17”

Cold tire pressure (front TE-TXC racing use, TC) ..... 0.9÷1.0 Kg/cm^2 (12.8-14.2 psi)
Cold tire pressure (rear TE-TXC racing use, TC) ..... 0.8÷0.9 Kg/cm^2 (11.4-12.8 psi)
Cold tire pressure (front TE-TXC road use) ..... 1.1 Kg/cm^2 (15.6 psi)
Cold tire pressure (rearTE-TXC road use) ..... 1.0 Kg/cm^2 (14.2 psi)
Cold tire pressure
(front SMR) ..... 1.4 kg/cm^2 - 20 p.s.i.(Racing use); 1.8 kg/cm^2 - 25.6 p.s.i. (Road use: rider only);
2.0 kg/cm^2 - 28.4 p.s.i. (Road use: rider and passenger)
Pressione di gonfiaggio a freddo
(rear SMR) ..... 1.6 kg/cm^2 - 22.7 p.s.i. (Racing use); 2.0 kg/cm^2 - 28.4 p.s.i. (Road use: rider only);
2.2 kg/cm^2 - 31.3 p.s.i. (Road use: rider and passenger)

ELECTRICAL COMPONENTS LOCATION (TE-SMR)

The ignition system includes the following elements:
- Generator, in oil bath, on the inner side of L.H. crankcase cover;
- Electronic ignition coil under the fuel tank;
- Electronic power unit C.D.I. under the fuel tank;
- Voltage regulator under the fuel tank;
- Spark plug on the R.H. side of cylinder head;
- Starting motor 12V-450W behind the cylinder;
- Electric start remote control switch on the left side of the rear frame.
- M.A.Q.S. sensor (pressure, throttle control position, air temperature) on the throttle body.

The electric system includes the following elements:
- Battery 12V-6Ah or, in alternative, 12V-7Ah, under the saddle;
- Flashing indicator device on the left side of the rear frame;
- Relay for light and injection system, on the L.H. side of the frame;
- Relay for the electric fan, on the R.H. side of the frame;
- Electric fan;
- Two fuses 15A and one 20A, on the right side of the rear mudguard;
- Fall sensor (SMR) on the right side of the rear frame;
- Coolant temperature sensor;
- Lambda probe;
- Headlamp with two filaments bulb of 12V-35/35W and parking light bulb of 12V-3W;
- Rear tail-light with stop bulbs of 12V-21W and parking light bulb of 12V 5W;
- Turn signals bulb of 12V-10W;
- Fuel pump inside the fuel tank.

ELECTRICAL COMPONENTS LOCATION (TC-TXC)

The ignition system includes the following elements:
- Generator on the inner side of L.H. crankcase cover;
- Electronic coil and condenser (TXC) under the fuel tank;
- Electronic power unit C.D.I. under the fuel tank;
- Voltage regulator under the fuel tank;
- Spark plug on the R.H. side of cylinder head;
- Starting motor 12V-450W behind the cylinder (TXC);
- Electric start remote control switch on the left side of the rear frame (TXC);
- Potentiometer on the carburettor.

The electric system includes the following elements (TXC):
- Battery 12V-6Ah under the saddle;
- Two fuses 20A, on the electric starter contactor.

DIMENSIONS mm- WEIGHTS (§)

TE

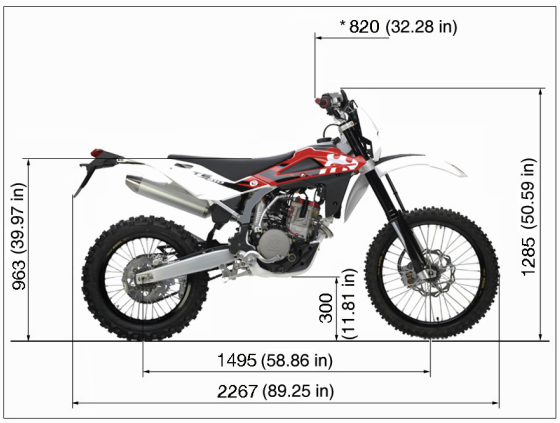

TE 250-310 .....kg 107/ lb 235.89
TE 450 .....kg 112/ lb 246.92
TE 510 .....kg 112/ lb 246.92

TC

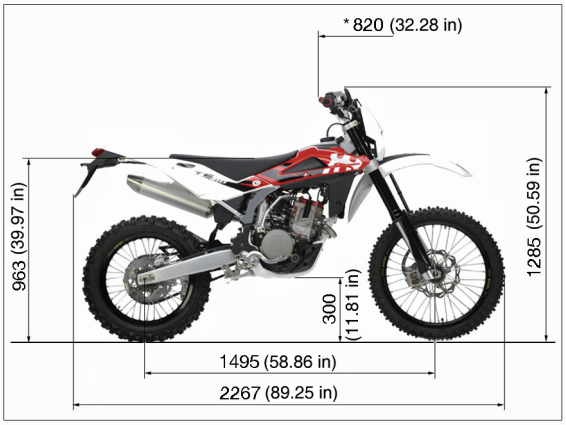

TC 450 .....kg 104,5 / lb 230.38
TC 510 .....kg 105 / lb 231.49

TXC

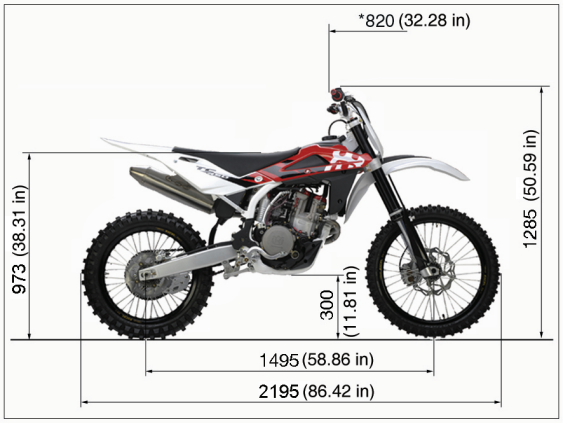

TXC 250 .....kg 104,7 / lb 230.82
TXC 450 .....kg 110 / lb 242.51
TXC 510 .....kg 111 / lb 244.71

SMR

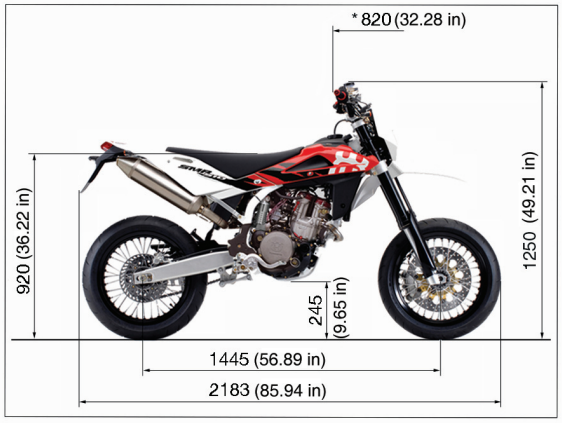

SMR 450 .....kg 120,5 / lb 265.66
SMR 510 .....kg 120,5 / lb 265.66

(§): Dry weight
*: overall width

CAPACITIES	TYPE	QUANTITY
Fuel tank (reserve included)	Unleaded gasoline (98 R.O.N.)	1.58 Imp. Gall./ 1.9 U.S. Gall.
Fuel reserve		1.58 Imp. Qt./ 1.9 U.S. Qt.
Change gear and main transmission oil	AGIP RACING 4T (SAE 10W60)	1.5 Imp. Qt./ 1.8 U.S. Qt. (oil and oil filter replacement)
Change gear and main transmission oil	AGIP RACING 4T (SAE 10W60)	1.3 Imp. Qt./ 1.6 U.S. Qt. (oil replacement)
Front fork oil	AGIP FORK 7,5 (SAE 7,5; SAE for hard climatic conditions)	
TC:		320 cm^3
TE:		725 cm^3
SMR:		740 cm^3
Oil for rear shock - absorber	AGIP FORK 2,5 (SAE 2,5)	
Fluid for cooling system	AGIP COOL	2.0÷2.4 Imp. Pints; 2.3÷2.7 U.S. Pints
Front brake fluid	AGIP BRAKE 4 (DOT 4)	
Rear brake fluid	AGIP BRAKE 4 (DOT 4)	
Clutch fluid	OLIO MINERALE SAE 10 PER CIRCUITI IDRAULICI	
Drive chain lubrication	AGIP CHAIN LUBE	
Grease lubrication	AGIP BIKE GREASE	
Electric contact protection	AGIP CONTACT CLEANER	
Fillers for radiator	AREXONS TURAFALLE LIQUIDO	
Air filter oil	AGIP FORMULA FILTER "Foam air filter protection oil"	
Air filter detergent	AGIP "Filter clean foam air detergent fluid"	

WARNING! - Use of additives in fuel or lubricants is not allowed

Section B

PRE -DELIVERY INSPECTION

Description	Operation	Pre-delivery
Engine oil	Check level	#
Coolant	Check / Restore level	#
Cooling system	Check for leakage	#
Elettroventole (TE-SMR)	Controllo funzionamento	#
Spark plugs	Check / Replace	#
Throttle body / Carburettor	Check and adjust	#
Brakes / Clutch fluid	Check level	#
Brakes / Clutch	Check operation	#
Brakes / Clutch	Check lines for leakage	#
Throttle control	Check operation	#
Throttle control	Check / Adjust play	#
Choke control	Check operation	#
Flexible controls and transmissions	Check / Adjust	#
Drive chain	Check / Adjust	#
Tyres	Check pressure	#
Side stand	Check operation	#
Interruttore cavalletto laterale	Check operation	#
Electrical equipment	Check operation	#
Instrument panel	Check operation	#
Lights / Visual signals	Check operation	#
Horn	Check operation	#
Headlight	Check operation	#
Ignition switch	Check operation	#
Locks	Check operation	#
Screws and nuts	Check / Tighten	#
Hose clamps	Check / Tighten	#
General lubrication		#
General test		#

TC 450, 510; TE-TXC 250, 450, 510-2009; TE 310-2009 COMPETITION MOTORCYCLE, RACING USE: with FULL POWER ENGINE	PERIODIC MAINTENANCE SCHEDULE (SEE YOUR HUSQVARNA DEALER FOR THESE SERVICES)							
	COUPON		COUPON	COUPON	COUPON	COUPON		
ITEM	AFTER FIRST 3 HOURS	EVERY 4h MX/8h EN	EVERY 8h MX/16h EN	EVERY 16h MX/32h EN	EVERY 32h MX/64h EN	EVERY 40h MX/80h EN	REPLACE IF NECESSARY	SEE PAGE
VALVE	C (•)			C (•)		S		D.4 - F.8 G.6 - G.7
VALVE SPRING						C	X	F.8 - G.6 G.7
VALVE CUP, VALVE HALF CONE						C	X	F.8 - G.7
ROCKER ARM (INTAKE-EXHAUST)						C	X	F.8 - G.8
CAMSHAFT						C		F.4 - G.9 H.36- H.37
VALVE TIMING CHAIN					C	S		F.11 - G.10 H.29- H.42
VALVE TIMING CHAIN SLIDER						S		F.8 - F.11 G.10
VALVE TIMING DRIVEN GEAR						C	X	F.6 - G.10 H.36
VALVE TIMING DRIVING GEAR					C		X	F.11 - G.10 H.38
VALVE TIMING CHAIN TENSIONER						C		F.5 - G.10 H.36
STARTER DECOMPRESSOR SYSTEM					C		X	D.8 - F.6 G.8 - H.37
INTAKE MANIFOLD			C		S			H.42
CYLINDER ASSY.						C	X	F.10 - G.11 H.32
PISTON ASSY.					C	S		F.10 - G.11 H.32
CONNECTING ROD ASSY.						S		F.24 - G.15 G.17 - H.14
CRANKCASE BEARINGS						S		F.21 - H.22
ENGINE OIL	S		S					D.15
OIL PUMP					C			F.17 - G.20 H.24
OIL FILTER CARTRIDGE/ NET OIL FILTER	S, P		S, P					D.16
CRANKCASE- CYLINDER HEAD HOSE						C		F.5 - H.42
SET OF MATCHED PRIMARY				C				F.20 - G.19 H.24 - H.27
CLUTCH HUB				C			X	F.14 - G.19 H.27 - H.28
CLUTCH DISCS			C		S		X	D.10 - F.13 G.8 - H.27
CLUTCH DISCS PRESSURE PLATE					C			F.13 - G.19 H.27 - H.28
CLUTCH SPRING					C		X	F.13 - G.18 H.27 - H.28
CLUTCH DISCS HOUSING					C			F.14 - G.19 H.27 - H.28
CLUTCH DISENGAGEMENT ROD					C			F.14 - G.19 H.27 - H.28
DRIVE SPROCKET		C	S				X	F.22 - H.17 Y.15
STARTING GEARS					C		X	F.16 H.24 - H.26

TC 450, 510; TE-TXC 250, 450, 510-2009; TE 310-2009 COMPETITION MOTORCYCLE, RACING USE: with FULL POWER ENGINE	PERIODIC MAINTENANCE SCHEDULE (SEE YOUR HUSQVARNA DEALER FOR THESE SERVICES)							
	COUPON		COUPON	COUPON	COUPON	COUPON		
ITEM	AFTER FIRST 3 HOURS	EVERY 4h MX/8h EN	EVERY 8h MX/16h EN	EVERY 16h MX/32h EN	EVERY 32h MX/64h EN	EVERY 40h MX/80h EN	REPLACE IF NECESSARY	SEE PAGE
STARTING PEDAL				L				F.12 - H.41
GEAR CONTROL PEDAL			C					F.18 - H.41
SPARK PLUG			P	S				M. 26
SPARK PLUG CAP				C				M. 26
CARBURETOR		P				R		D.10 - E.9 G.21
CARBURETOR THROTTLE VALVE						C		G.21 - G.22 G.24
AIR FILTER		P, L						D.23
RADIATORS		C						N.3
COOLANT HOSES AND CLAMPS		C						N.5
RADIATORS HOSES /WATER PUMP		C						N.5
COOLANT		C					X	D.17 - N.3
FOOTRESTS, FOOTREST PINS AND SPRINGS			C				X	Y.4
SADDLE FRAME FASTENING BOLTS, ENGINE FASTENING BOLTS	C			C				Y.4
SIDE STAND		C						Y.4
CHAIN GUIDE ROLLER, BEARINGS		C						Y.4
STEERING HEAD, STEM AND STEERING BRACKET			L					I.48
FRONT FORK			R					I.4 - I.48
HANDLEBAR HOLDERS AND FASTENING SET	C			C				D.28 - D.28
REAR SWING ARM BUSHINGS				C				J.15
REAR CHAIN SLIDER				C			X	J.17
REAR SUSPENSION LINKS BUSHINGS				C				J.16
REAR CHAIN GUIDE/ REAR CHAIN GUARD		C					X	J.17
REAR SWING ARM PIVOT NEEDLE BEARINGS			L					J.15
REAR SHOCK ABSORBER					R			J.5
REAR SUSPENSION LINKS NEEDLE BEARINGS AND GUDGEON PIN		L						J.16
THROTTLE CONTROL ASSY.		C, L						D.8
CLUTCH CONTROL ASSY.		C (•)				R		D.11 - P.5

TC 450, 510; TE-TXC 250, 450, 510-2009; TE 310-2009 COMPETITION MOTORCYCLE, RACING USE: with FULL POWER ENGINE	PERIODIC MAINTENANCE SCHEDULE (SEE YOUR HUSQVARNA DEALER FOR THESE SERVICES)							
	COUPON		COUPON	COUPON	COUPON	COUPON		
ITEM	AFTER FIRST 3 HOURS	EVERY 4h MX/8h EN	EVERY 8h MX/16h EN	EVERY 16h MX/32h EN	EVERY 32h MX/64h EN	EVERY 40h MX/80h EN	REPLACE IF NECESSARY	SEE PAGE
THROTTLE AND STARTING DECOMPRESSOR CABLES		C		L			X	D.7 - D.8
FRONT BRAKE DISC			C				X	L.4
FRONT BRAKE SYSTEM FLUID		C				S		D.12 - L.6 L.9
REAR BRAKE DISC			C (*)				X	L.4
REAR BRAKE SYSTEM FLUID		C				S		D.14 - L.8 L.9
BRAKE PADS		C					X	L.5
BRAKE SYSTEM PUMP/CALIPER HOSES		C						L.11
FUEL HOSES		C				S	X	D.29
EXHAUST SILENCER PACKING			S					D.30
EXHAUST PIPE AND SILENCER		C					X	D.31
WHEEL SPOKES TENSION	C		C					Y.13
WHEEL HUB BEARINGS					S			Y.12
REAR DRIVE SPROCKET			S					Y.14
REAR DRIVEN SPROCKET SCREWS TIGHTENING	C		C					X.5
REAR TRANSMISSION CHAIN	C, L		S					D.19
BOLTS AND NUTS TIGHTNESS GENERAL CHECK	C			C				Capitolo X

KEY FOR MAINTENANCE SCHEDULE
h: HOURS
S: REPLACEMENT
C: CHECK
C(•): CLEARANCE CHECK
P: CLEANING
R: OVERHAUL
L: GREASING/LUBRICATION
MX: MOTOCROSS
EN: ENDURO
(*) ROTATE 45° THE FASTENING BUSHES

NOTE:
- EVERY REMOVAL REPLACE ALL GASKETS
- REPLACE SCREWS AND NUTS IF WORN
- GENERAL CHECK AFTER RACING USE ON MUDDY OR SANDY GROUNDS

PERIODIC MAINTENANCE SCHEDULE (SEE YOUR HUSQVARNA DEALER FOR THESE SERVICES)					
SMR 450, 510 - TE 250, 450, 510 / 2009; TE 310-2009 - STANDARD MOTORCYCLE, STREET LEGAL (with LIMITED POWER ENGINE):	AFTER **FIRST** **1000 KM**	EVERY **5000 KM**	EVERY **10000 KM**		
SMR 450, 510 / 2009 - COMPETITION MOTORCYCLE, RACING USE (with FULL POWER ENGINE)	AFTER **FIRST** **3 HOURS**	EVERY **5 HOURS**	EVERY **15 HOURS**	REPLACE IF NECESSARY	SEE PAGE
ITEM	**COUPON**	**COUPON**	**COUPON**		
VALVE	C (•)	C (•)	S		D.4 - F.8 G.6 - G.7
VALVE SPRING			C	X	F.8 - G.6 G.7
VALVE CUP, VALVE HALF CONE			C	X	F.8 - G.7
ROCKER ARM (INTAKE-EXHAUST)			C	X	F.8 - G.8
CAMSHAFT			C		F.4 - G.9 H.36 - H.37
VALVE TIMING CHAIN			S		F.11 - G.10 H.29 - H.42
VALVE TIMING CHAIN SLIDER		C	S		F.8 - F.11 G.10
VALVE TIMING DRIVEN GEAR			C	X	F.6 - G.10 H.36
VALVE TIMING DRIVING GEAR			C		F.11 - G.10 H.38
VALVE TIMING CHAIN TENSIONER			C		F.5 - G.10 H.36
STARTER DECOMPRESSOR SYSTEM			C	X	D.7 - F.6 G.8 - H.37
INTAKE MANIFOLD		C	S	X	H.42
CYLINDER ASSY.			C	X	F.10 - G.11 H.32
PISTON ASSY.			S		F.10 - G.11 H.32
CONNECTING ROD ASSY.			S		F.24 - G.15 G.17 - H.14
CRANKCASE BEARINGS			S		F.21 - H.22
ENGINE OIL /OIL FILTER CARTRIDGE	S	S	S		D.15
OIL PUMP			C		F.17 - G.20 H.24
CRANKCASE / CYLINDER HEAD HOSE			C		F.5 - H.42
SET OF MATCHED PRIMARY		C		X	F.20 - G.19 H.24 - H.27
CLUTCH HUB		C		X	F.14 - G.19 H.27 - H.28
CLUTCH DISCS		C	S	X	D.10 - F.13 G.8 - H.27
CLUTCH DISCS PRESSURE PLATE			C		F.13 - G.19 H.27 - H.28
CLUTCH SPRING			C	X	F.13 - G.18 H.27 - H.28
CLUTCH DISCS HOUSING			C	X	F.14 - G.19 H.27 - H.28
CLUTCH DISENGAGEMENT ROD			C		F.14 - G.19 H.27 - H.28
DRIVE SPROCKET		C	S		F.22 - H.17 Y.15
STARTING GEARS			C	X	F.16 H.24 - H.26

PERIODIC MAINTENANCE SCHEDULE (SEE YOUR HUSQVARNA DEALER FOR THESE SERVICES)					
SMR 450, 510 - TE 250, 450, 510 / 2009; TE 310-2009 - STANDARD MOTORCYCLE, STREET LEGAL (with LIMITED POWER ENGINE):	AFTER **FIRST** **1000 KM**	EVERY **5000 KM**	EVERY **10000 KM**		
SMR 450, 510 / 2009 - COMPETITION MOTORCYCLE, RACING USE (with FULL POWER ENGINE)	AFTER **FIRST** **3 HOURS**	EVERY **5 HOURS**	EVERY **15 HOURS**	REPLACE IF NECESSARY	SEE PAGE
ITEM	**COUPON**	**COUPON**	**COUPON**		
STARTING PEDAL			L		F.12 - H.41
GEAR CONTROL PEDAL				X	F.18 - H.41
SPARK PLUG		P	S		M. 26
SPARK PLUG CAP		C	C	X	M. 26
CARBURETOR			P		D.9 - E.9 G.21
CARBURETOR THROTTLE VALVE			C	X	G.21 - G.22 G.24
AIR FILTER (**)		P, L	P, L	X	D.18
RADIATORS			C		N.3
COOLANT HOSES AND CLAMPS		C	C		N.5
RADIATORS HOSES/WATER PUMP		C	C		N.5
FOOTRESTS, FOOTREST PINS AND SPRINGS				X	Y.4
SADDLE FRAME FASTENING BOLTS, ENGINE FASTENING BOLTS	C		C		Y.4
SIDE STAND		C			Y.4
CHAIN GUIDE ROLLER, BEARINGS		C	C	X	I.48
STEERING HEAD, STEM AND STEERING BRACKET			L		I.4 - I.48
FRONT FORK			R		D.25
HANDLEBAR HOLDERS AND FASTENING SET	C		C		J.15
REAR SWING ARM BUSHINGS			C		J.17
REAR CHAIN SLIDER			S		J.16
REAR SUSPENSION LINKS BUSHINGS			C	X	J.17
REAR CHAIN GUIDE/ REAR CHAIN GUARD	C	C		X	J.15
REAR SUSPENSION LINKS NEEDLE BEARINGS AND GUDGEON PIN		L			J.5
REAR SHOCK ABSORBER			C		J.16
THROTTLE CONTROL ASSY.		C, L			D.8
CLUTCH CONTROL ASSY.		C (•)	R		D.11 - P.5
THROTTLE AND STARTING DECOMPRESSOR CABLES		C	L	X	D.7 - D.8
FRONT BRAKE DISC			C	X	L.4
FRONT BRAKE SYSTEM FLUID		C	S		D.12 - L.6 L.9

PERIODIC MAINTENANCE SCHEDULE (SEE YOUR HUSQVARNA DEALER FOR THESE SERVICES)					
SMR 450, 510 - TE 250, 450, 510 / 2009; TE 310-2009 - STANDARD MOTORCYCLE, STREET LEGAL (with LIMITED POWER ENGINE):	AFTER **FIRST** **1000 KM**	EVERY **5000 KM**	EVERY **10000 KM**		
SMR 450, 510 / 2009 - COMPETITION MOTORCYCLE, RACING USE (with FULL POWER ENGINE)	AFTER **FIRST** **3 HOURS**	EVERY **5 HOURS**	EVERY **15 HOURS**	REPLACE IF NECESSARY	SEE PAGE
ITEM	**COUPON**	**COUPON**	**COUPON**		
REAR BRAKE DISC			C	X	L.4
REAR BRAKE SYSTEM FLUID		C	S		D.14 - L.8 L.9
BRAKE PADS	C	C	C	X	L.5
BRAKE SYSTEM PUMP/CALIPER HOSES			C	X	L.11
FUEL HOSES			C	X	D.29
EXHAUST SILENCER PACKING				X	D.30
EXHAUST PIPE AND SILENCER		C		X	D.31
WHEEL SPOKES TENSION	C		C		Y.13
WHEEL HUB BEARINGS			C	X	Y.12
REAR DRIVE SPROCKET			S		Y.14
REAR DRIVEN SPROCKET SCREWS TIGHTENING	C	C	C		X.5
REAR TRANSMISSION CHAIN	C, L	C, L	S		D.19
BOLTS AND NUTS TIGHTNESS GENERAL CHECK	C	C			Capitolo X

KEY FOR MAINTENANCE SCHEDULE
h: HOURS
S: REPLACEMENT
C: CHECK
C(•): CLEARANCE CHECKP: CLEANING
R: OVERHAUL
L: GREASING/LUBRICATION
MX: MOTOCROSS
EN: ENDURO
(*) ROTATE 45° THE FASTENING BUSHES

NOTE:
- EVERY REMOVAL REPLACE ALL GASKETS
- REPLACE SCREWS AND NUTS IF WORN
- GENERAL CHECK AFTER RACING USE ON MUDDY OR SANDY GROUNDS
(**): + SOLENOID VALVE HOSE FILTER (STANDARD MOTORCYCLE)

Section C

TROUBLES AND REMEDIES

ENGINE

Trouble	Cause	Remedy
Engine don't start or starts with difficulty	**Inadequate compression**	
	1. Piston seizure	Replace
	2. Con-rod small or big end seized	Replace
	3. Piston rings worn	Replace
	4. Cylinder worn	Replace
	5. Low torque cylinder head nuts	Tighten
	6. Head gasket blowing	Replace
	7. Spark plug loose	Tighten
	8. Incorrect valve play	Adjust
	9. Valve springs weak or seized	Replace
	10. Valves seized	Replace
	11. Incorrect decompressor adjustment	Adjust
	No or weak spark	
	1. Spark plug faulty	Replace
	2. Spark plug dirty or wet	Clean or dry
	3. Spark plug gap too large	Adjust
	4. Ignition coil faulty	Replace
	5. H.T. leads damaged or short circuiting	Check
	6. Electronic device faulty	Replace
	7. R.H. switch faulty	Replace
	Fuel not reaching carburettor (TC, TXC)	
	1. Fuel tank cap breather blocked	Clean
	2. Fuel cock blocked	Clean
	3. Fuel feed hose blocked	Clean
	4. Carburettor fuel filter dirty	Clean
	5. Worn out float valve or worn out floats	Replace
	6. Rocker blocking float valve	Free
	Carburettor flooding (TC, TXC)	
	1. High fuel level in float bowls	Adjust
	2. Worn out float valve or worn out floats in open position	Replace or free
Engine cuts out easily	1. Spark plug dirty	Clean
	2. Electronic control unit faulty	Replace
	3. Carburettor jets blocked	Clean
	4. Idling low	Adjust
Engine noisy	**Piston noise**	
	1. Excessive play between cylinder liner and piston	Replace
	2. Piston rings or piston rings seats worn	Replace
	3. Excessive carbon layers inside the combustion chamber, or on the piston top	Clean
	4. Worn rocker arm	Replace
	5. Excessive valve play	Adjust
	6. Valve springs weak or seized	Replace
	7. Cam chain worn	Replace
	8. Incorrect timing chain adjustment	Adjust
	Crankshaft noise	
	1. Main bearings worn	Replace
	2. High radial and axial play at con-rod big end	Replace
	3. Crankshaft gear damaged	Replace
	4. Crankshaft nut loose	Tighten

Trouble	Cause	Remedy
	Clutch noise	
	1. Discs worn	Replace
	2. Excesive free play between clutch drum and driving discs	Replace
	Gearbox noise	
	1. Gears worn	Replace
	2. Gear splines worn	Replace
Rear transmission chain noise	1. Chain stretched or badly adjusted	Replace or adjust
	2. Engine sprocket and rear wheel sprocket worn	Replace
Clutch slip	1. Clutch springs weak	Replace
	2. Clutch discs worn	Replace
Clutch drag	1. Spring tension uneven	Replace
	2. Clutch discs bent	Replace
Gears not engaging	1. Gearshift forks bent or seized	Replace
	2. Gearchange pawls worn	Replace
	3. Gearshift forks' control pins damaged	Replace
Gearchange lever doesn't return	1. Selector return spring weak or broken	Replace
	2. Gearshift forks worn	Replace
Slips out of gear	1. Sliding dogs worn	Replace
	2. Gear splines worn	Replace
	3. Sliding dog seats on gears worn	Replace
	4. Splines gearshift forks' control shaft worn	Replace
	5. Gearshift forks control pins worn	Replace
Engine lacks power	1. Air filter dirty	Clean
	2. Carburettor main jet blocked or wrong size **(TC, TXC)**	Clean or replace
	3. Poor quality fuel	Replace
	4. Intake manifold loose	Tighten
	5. Spark plug gap too large	Adjust
	6. Inadequate compression	Find cause
	7. Incorrect valve play	Adjust
	8. Faulty valve guides or seats	Replace
	9. Valve springs weak or seized	Replace
Engine overheating	1. Excessive coke on combustion chamber and/or piston crown	Clean
	2. Insufficient engine oil, or wrong oil used	Top up or replace
	3. Radiator air flow blocked	Clean
	4. Poor seal at cylinder head gasket	Replace
	5. Clutch slipping	Adjust
	6. Faulty cooling fan (TE, SMR)	Replace the thermoswitch

FRAME, WHEELS AND SUSPENSION

Trouble	Cause	Remedy
Difficult to turn handlebars	1. Low tire pressure	Inflate
	2. Steering head bearings' adjustment ring nut or steering stem nut too tight	Adjust
	3. Bent steering head stem	Replace steering bracket
	4. Stearing head bearings worn or seized	Replace
Handlebar vibrates	1. Front fork legs bent	Replace
	2. Front wheel axle bent	Replace
	3. Frame bent	Replace
	4. Front wheel rim bent	Replace
	5. Front wheel bearings worn	Replace
Suspension too hard	1. Too much oil in front fork stanchions	Drain excess
	2. Too high viscosity of front fork stanchion oil	Replace
	3. Inflating pressure too high	Deflate
	4. Rear shock absorber incorrectly set	Adjust
Suspension too soft	1. Insufficient oil in front fork stanchions	Top up
	2. Too low viscosity of front fork stanchion oil	Replace
	3. Weak front fork spring	Replace
	4. Weak rear shock absorber spring	Replace
	5. Rear shock absorber badly adjusted	Adjust
Wheel (front and rear) vibrates	1. Wheel rim bent	Replace
	2. Wheel hub bearings worn	Replace
	3. Wheel spokes loose	Tighten
	4. Wheel axle nut loose	Tighten
	5. Rear swinging arm bearings worn	Replace
	6. Chain tensioner incorrectly set	Adjust
	7. Wheel not balanced correctly	Balance
Rear suspension noisy	1. Link rod bearings or spacers worn	Replace
	2. Shock absorber ball joints worn	Replace
	3. Shock absorber faulty	Replace
Poor (front and rear) braking	1. Air in the brake system	Bleed
	2. Insufficient fluid in reservoir	Top up
	3. Pads and/or disc worn	Replace
	4. Disc damaged	Replace
	5. Brake lever- pedal incorrectly adjusted	Adjust
	6. Water inside the braking system	Replace the fluid

ELECTRICS (see also chapter M)

Trouble	Cause	Remedy
Spark plug becomes dirty too frequently	1. Mixture too rich	Adjust carburettor
	2. Air filter dirty	Clean
	3. Piston rings worn	Replace
	4. Piston or cylinder worn	Replace
Spark plug overheats	1. Mixture too lean	Adjust carburettor
	2. Spark plug gap too small	Adjust
	3. Too high heat rating	Replace the spark plug
Generator charging too low or not at all	1. Wires to voltage regulator connected incorrectly or short circuiting	Connect correctly or replace
	2. Faulty voltage regulator	Replace
	3. Generator coil faulty	Replace
Generator charging too high	1. Voltage regulator faulty	Replace
The battery is discharged fast	1. Battery terminals dirty	Clean
Start motor won't start or slips (TE, SMR, TXC)	1. Battery flat	Recharge
	2. Control button on right hand switch unit faulty	Replace
	3. Starter relay faulty	Replace
	4. Starter motor faulty	Repair or replace
	5. Starter gears worn	Replace
	6. Free wheeel rollers worn or damaged	Replace free wheeel

FUEL INJECTION SYSTEM (see chapter S)

Section D

Adjustment of valves play D.4
Adjustment of starter decompression device D.7
Throttle cable adjustment D.8
Carburettor adjustment (TC, TXC) D.9
Idle adjustment (TC, TXC, SMR 450-R) D.9
Idle adjustment (TE, SMR) D.9
Clutch discs replacement (TC, TE, TXC, SMR) D.10
Adjustment of the control lever and check of
the clutch fluid level D.11
Adjustment of front brake control lever
and fluid level control (TE, TC, TXC, SMR) D.12
Rear brake pedal position adjustment D.13
Rear brake idle stroke adjustment D.14
Checking the rear brake fluid level D.14
Checking the engine oil level D.15
Engine oil replacement and bag filters-cartridge filter
cleaning or replacement D.16
Coolant level check D.17
Replacement of coolant D.17
Air filter check (TC-TXC) D.18
Air filter cleaning (TC-TXC) D.18
Air filter check (TE-SMR) D.19
Air filter cleaning (TE-SMR) D.20
Secondary transmission chain adjustment D.21
Lubricating the transmission chain D.22
Adjusting the suspensions according to particular
track conditions D.23
Adjusting the shock absorber D.24
Adjusting the shock absorber spring preload D.25
Shock absorber hydraulic brake adjustment D.26
Shock absorber springs D.26
Adjusting the front fork D.27
Front fork springs D.28
Steering bearings play adjustment D.29
Lock adjustment D.29
Handlebar position and height change
(TE, TC, TXC, SMR) D.30
Checking the fuel hose D.31
Replacing the muffler deadening material
(TC, TE, TXC) D.32
Replacing the muffler deadening material (SMR) D.33
Checking the exhaust system D.34

TC-TXC

TE

SMR

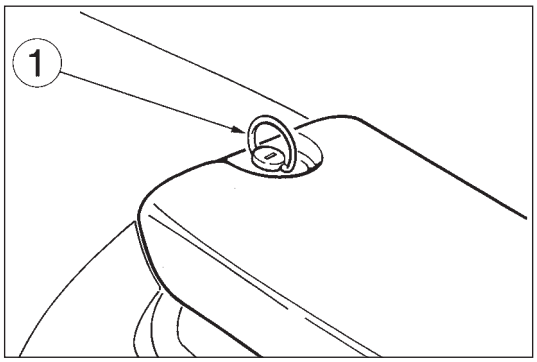

Adjusting the valve play

To check the valve clearance, proceed as follows , WITH COLD ENGINE:

First turn counterclockwise fastening rear pin (1) then remove the saddle.

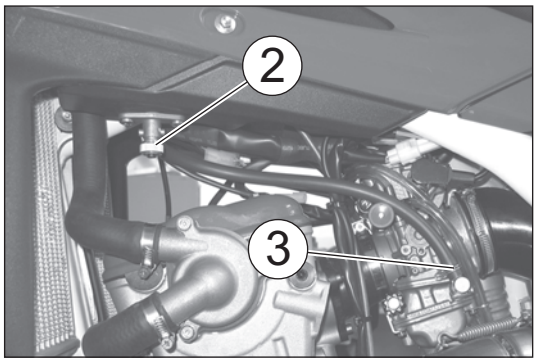

HOW TO REMOVE THE TANK (TC, TXC)

Close the fuel tap (2) and loosen the strap (3) on the connecting pipe to the carburettor, pull the pipe out of the carburettor.

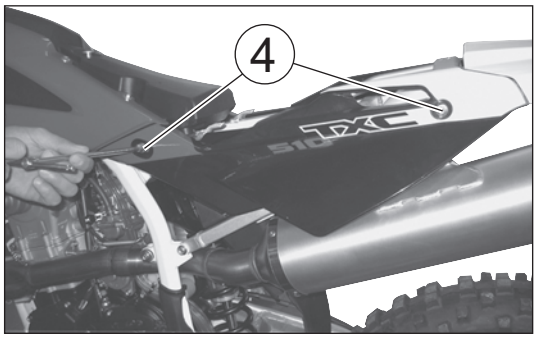

Remove the screws (4) and the side panels.

Remove the locking screw (A) and pull out the tank with its conveyors.

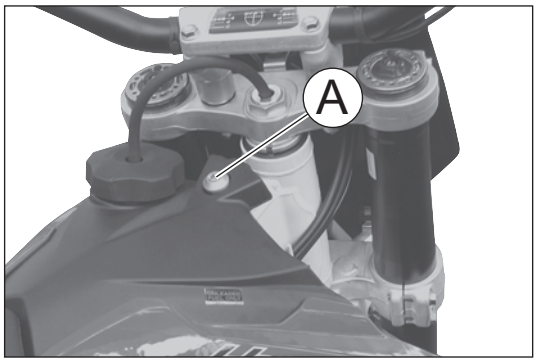

HOW TO REMOVE THE TANK (TE-SMR)

Remove the screws (1) and the side panels.

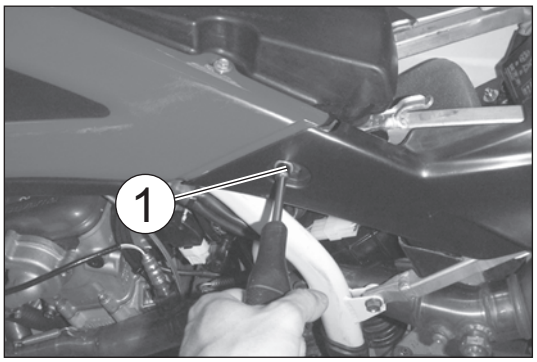

Remove the locking screw (A) of the tank.

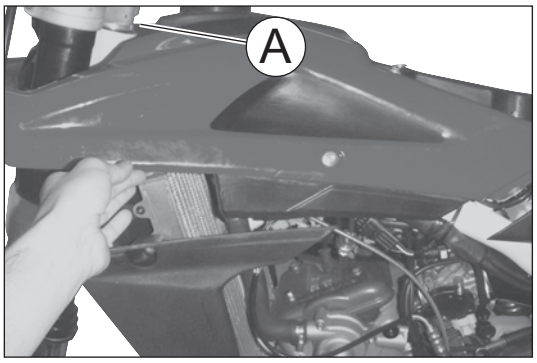

Lift the tank, then disconnect the connector of the fuel pump from the main cabling.
Disconnect the feeding pump (B) from the outlet coupling (C) on the fuel pump in the lower back section of the tank.

Pull out the tank with its conveyors.

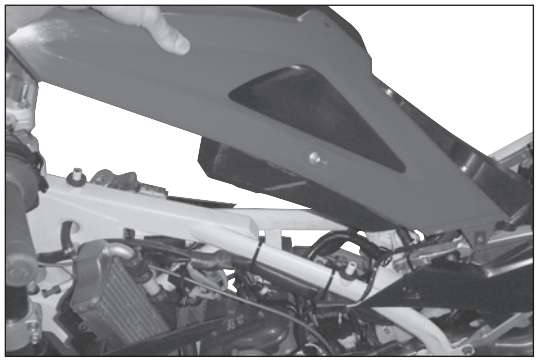

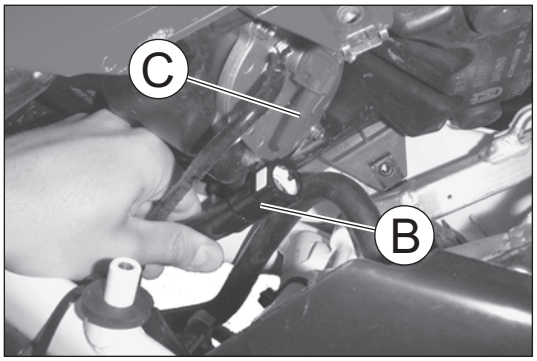

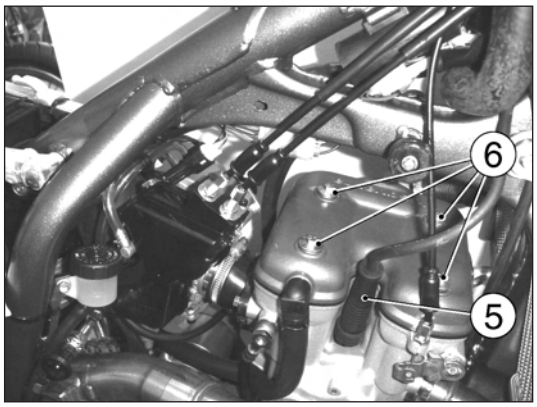

PROCEDURE APPLYING TO ALL THE MODELS

Remove the spark plug (5), the four cylinder head cover fastening screws (6) and the cylinder head cover.

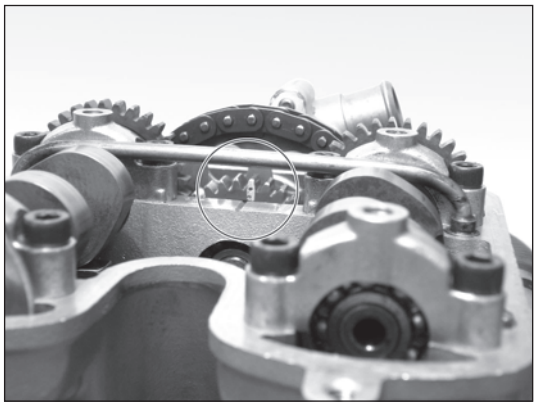

Engage second gear and, moving the vehicle forwards and backwards, bring the piston to Top Dead Center (in this condition , the mark on the cylinder head is aligned with the two marks on the idle gear of the camshafts, as illustrated in the figure).

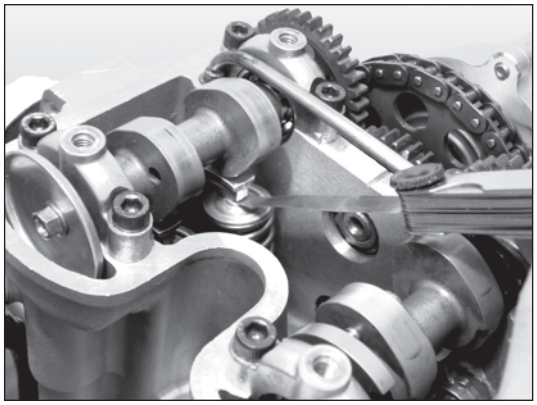

Check, by means of a feeler gauge, that the valve clearance is 0,10÷0,15 mm for INTAKE and 0,15÷0,20 mm for EXHAUST;

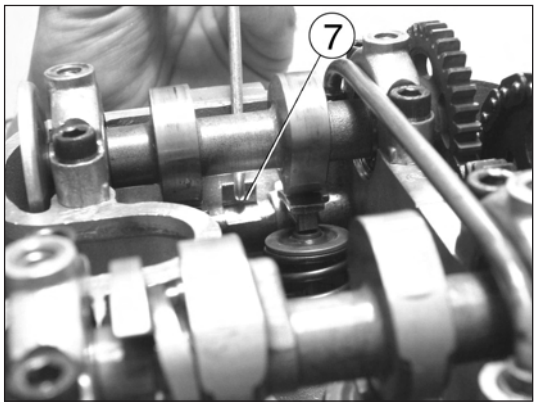

Otherwise, lift the retaining clip (7) using a hook, let the rocker arm slide to one side, extract the pad with a pair of pliers and check the thickness;
Depending on the result, fit a new pad (as spare parts, pads are supplied ranging from 1.60 mm to 2.60 mm in steps of 0.05 mm) and return the clip and rocker arm;
Check the valve clearance again and, if it's correct, reassembly the removed parts using the reverse procedure.

Adjustment of starter decompression device

In order to adjust the lever decompressor free play (approximately 3 mm - 0.12 in.): should the clearance be incorrect, unblock the counter ring-nut and turn the adjusting screw (by unscrewing it, the clearance is reduced, while by screwing screw it is increased); the lever holder (5) is provided with the adjuster (6); the adjustment can be also effected with the tightener (7) on the R.H. side of the engine (use this tightener if it is not possible to obtain the correct free play with the adjuster on the handlebar).

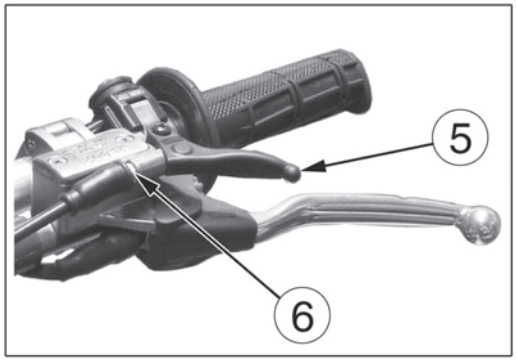

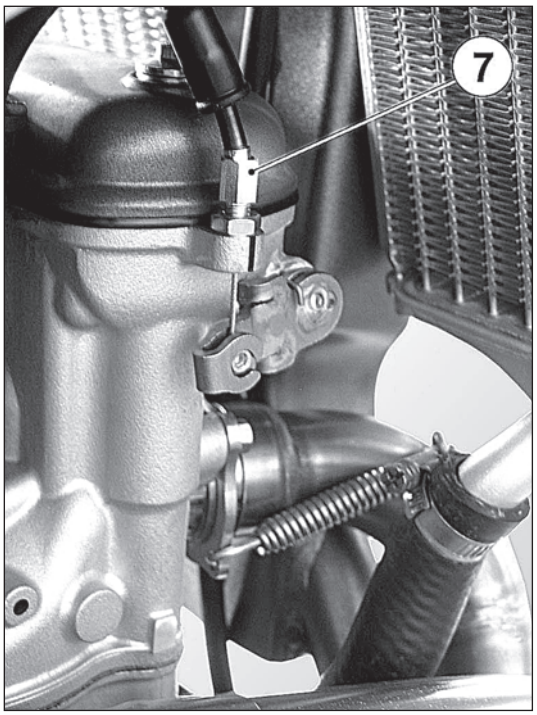

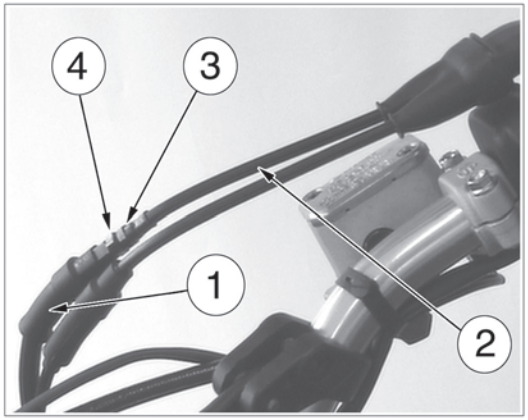

Throttle cable adjustment

To check the correct adjustment of the throttle operate as follows:
- remove the upper rubber cap (1);
- by moving cable (2) back and forth check for 2 mm (0.08 in.) clearance;
- should the clearance be incorrect, unblock the counter ring-nut (3) and turn the adjusting screw (4) (by unscrewing it, the clearance is reduced, while by screwing screw (4) it is increased);
- tighten the counter ring-nut again (3).

: Operation with damaged throttle cable could result in an unsafe riding condition

: Exhaust gas contains poisonous carbon monoxide gas. Never run the engine in a closed area or in a confined area.

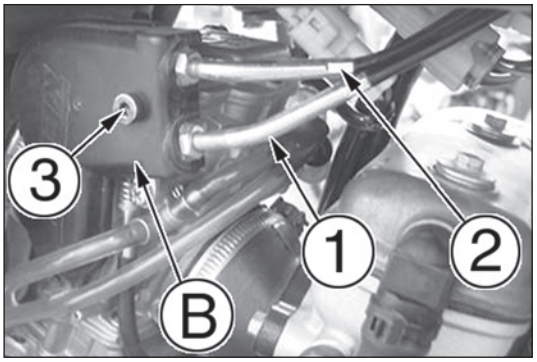

In case of throttle control cables (1) and (2) replacement it is necessary to respect, during reassembly, the measure Á (10mm/0.4 in.), as shown in the picture. Then reassemble guard cover (B) using screw (3) and adjust throttle control cables on handlebar. To replace throttle control cables, first remove tha fuel tank as shown on page E.23.

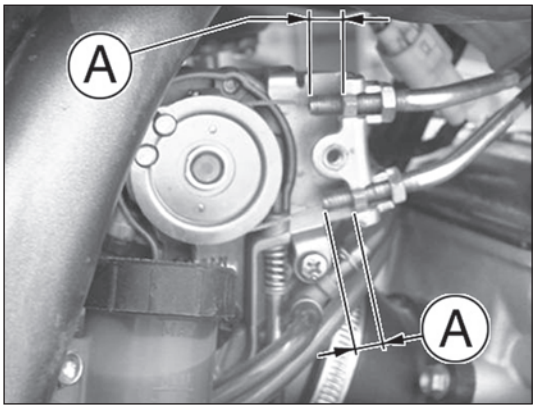

Carburettor adjustment (TC, TXC)
Adjust the carburettor with warm engine and with the throttle in closed position. Work as follows:
- turn slow running adjusting screw (1) on the left side of the bike, , until the engine is turning over at fairly high rpm (turn the screw clockwise to increase the rpm, and anticlockwise to descrease the rpm).
- turn adjusting screw (2) clockwise until the fully closed position is reached then turn back 1,5 turns (250) or 2 turns (450-510).
- progressively loosen adjusting screw (1) to obtain the slow running required.

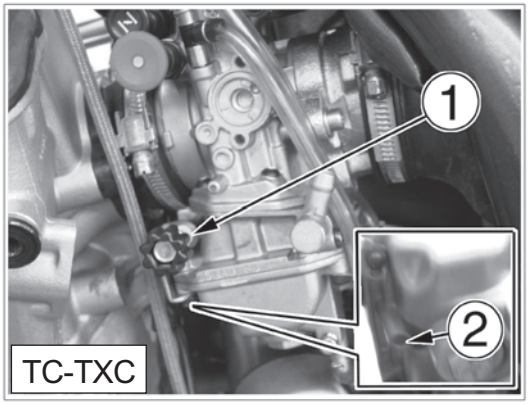

Idle adjustment (TC, TXC)
Adjust the carburetor with warm engine and with the throttle control in closed position.
Proceed as follows:
- turn slow running adjusting screw (1) on the left side of the bike, near the fuel cock (turn the screw clockwise to increase the rpm, and anticlockwise to descrease the rpm).

Idle adjustment (TE, SMR)
Adjust the carburetor with warm engine and with the throttle control in closed position.
- turn slow running adjusting screw (3) on the right side of the bike, on the throttle body, until you reach the minimum of 1.600 rpm (turn the screw clockwise to increase the rpm, and anticlockwise to descrease the rpm).

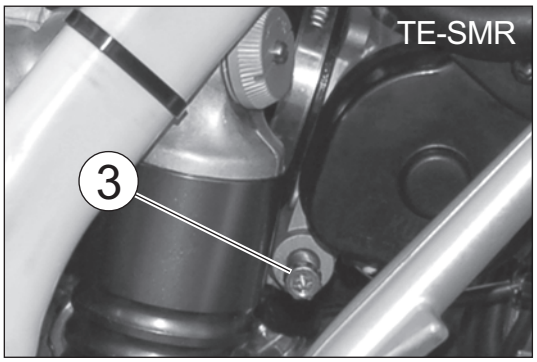

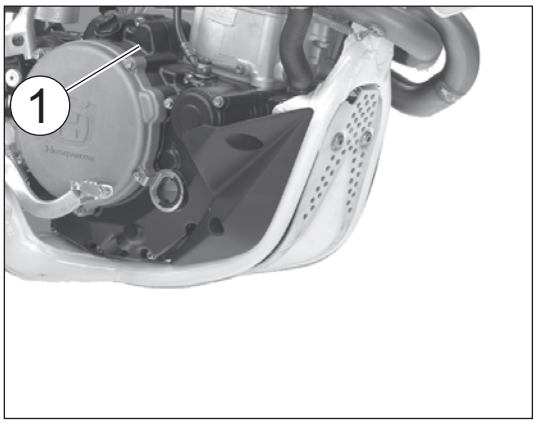

Clutch discs replacement (TC-TE-TXC-SMR)
This operation can be carried out by laying the motorcycle on the left side **without draining the engine oil**. Remove the five fastening screws (1) and the clutch cover (if necessary, lower the rear brake control pedal). Use a 5 mm allen wrench to loosen the six screws (2) that fasten clutch springs. Remove springs, pressure plate (3) complete with bearing and clutch control rod (4). Extract the discs (5), lubricate the new discs with engine oil then assemble the new discs (first always mount a lined disc). Reassemble pressure plate and springs. Tighten the clutch springs bolts whilst following a cross-over pattern and in steps (8 Nm-0,8 Kgm- 5.8 ft/lb). Reassemble the clutch cover (8 Nm-0,8 Kgm- 5.8 ft/lb).

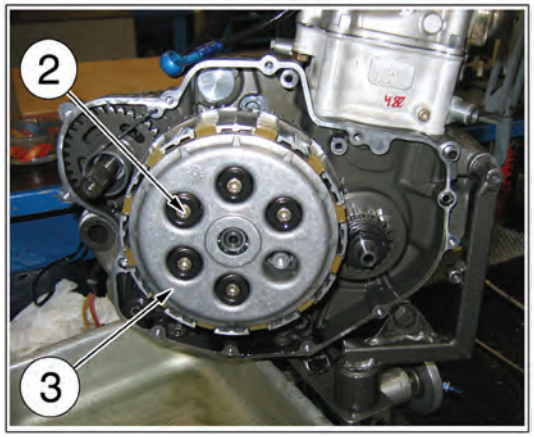

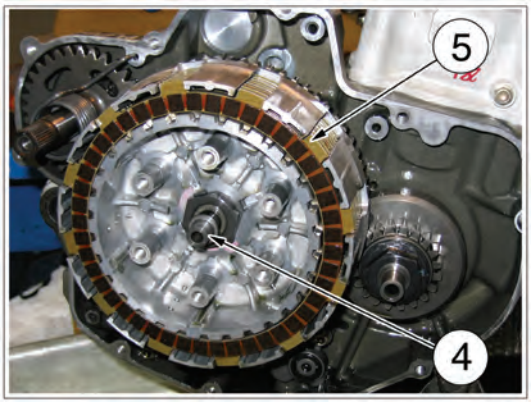

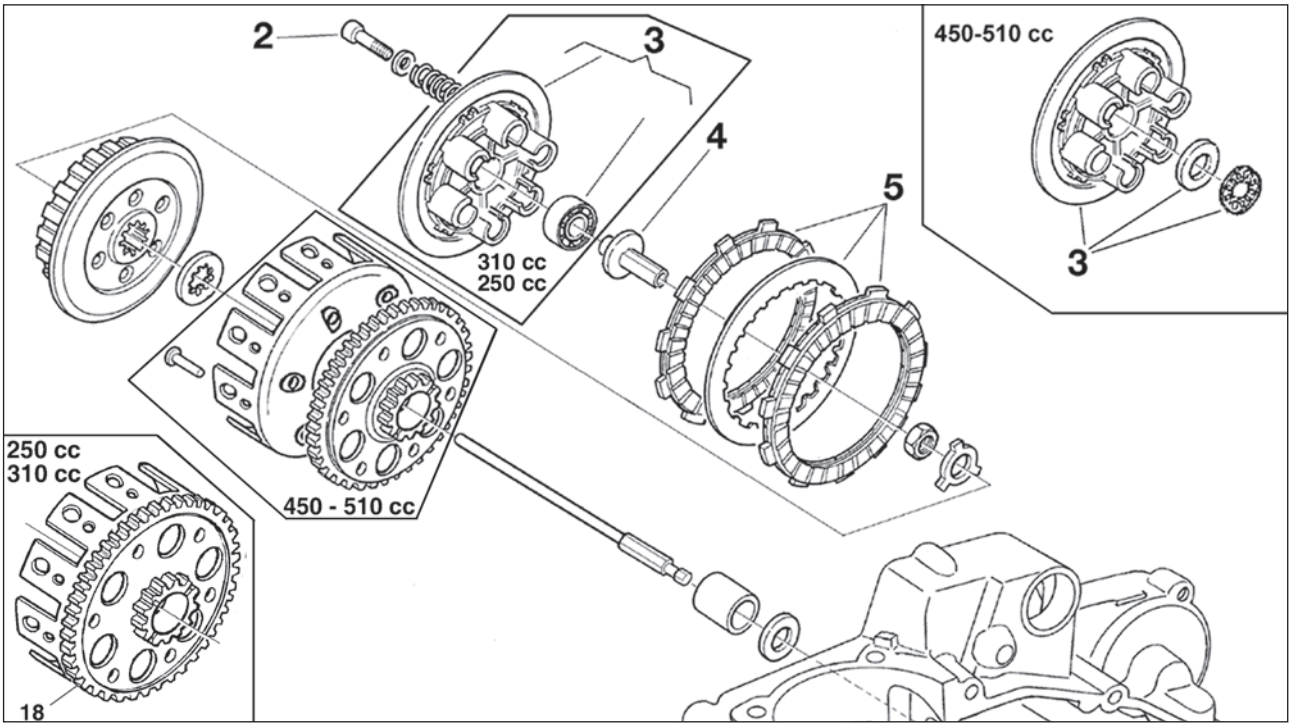

Adjustment of the control lever and check of the clutch fluid level
Free play (A) must be at least 3 mm (0.1 in.).
The lever position can be adjusted for any driver hand size. To decrease the lever distance from the handle grip, rotate the adjuster (B) CLOCKWISE. To increase the lever distance from the handle grip, rotate the adjuster (B) COUNTERCLOCKWISE. To check the fluid level, proceed as follows:
- remove screws (1), cover (2) and rubber pump diaphragm on the handlebar clutch control;
- by keeping the master cylinder (3) in horizontal position, check the fluid level is NOT BELOW 4 mm (0.16 in.) from the upper surface (D) of the pump body;
- if necessary, add fluid until the correct level is reached (see page A.9: TABLE FOR LUBRICATION and SUPPLIES for the fluid type)

: NEVER use brake fluid.

Reassembly the removed parts using the reverse procedure.
Periodically check the connecting hose (see “Periodical maintenance card”): if the hose (C) is bent or cracked, replace it.

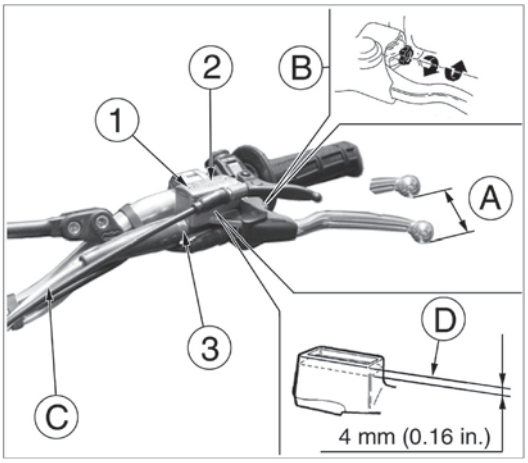

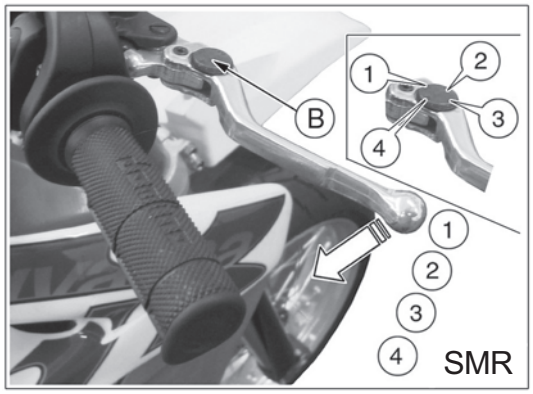

Adjustment of front brake control lever and fluid level control (TE-TC-TXC-SMR)

On the SMR model the lever position can be adjusted (4 adjustments) for any driver hand size. To decrease the lever distance from the handle grip, turn the adjuster (B) CLOCKWISE. To increase the lever distance from the handle grip, turn the adjuster (B) COUNTERCLOCKWISE. On the TE, TC and TXC models the adjuster (2), located on the control lever, allows adjusting of the free play (a).

Free play (a) must be at least 3 mm (0.1 in.). The level of the fluid in pump reservoir must never be below the minimum value (1), which can be checked from the window on the rear side of the pump body (TE, TC and TXC). For SMR model, check the level on the fluid reservoir. A decrease of the fuel level will let air into the sustem, hence an extension of the level stroke.

: If the brake lever feels mushy when it is applied, there may be air in the brake lines or the brake may be defective: CHECK THE BRAKING SYSTEM (page L.2).

: If the lever free play is excessive, the brake action can decrease: CHECK THE PADS THICKNESS (page L.5).

Do not spill brake fluid on to any painted surface or lenses (e.g. headlamp).

Do not mix two brands of fluid. Change the brake fluid in the brake line if you wish to switch to another fluid brand.

Brake fluid may cause irritation. Avoid contact with skin or eyes. In case of contact, flush thoroughly with water and call a doctor if your eyes were exposed.

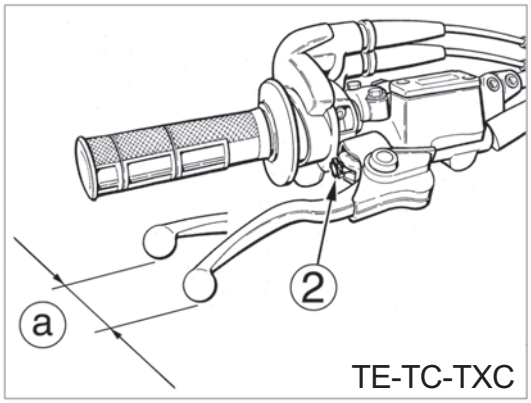

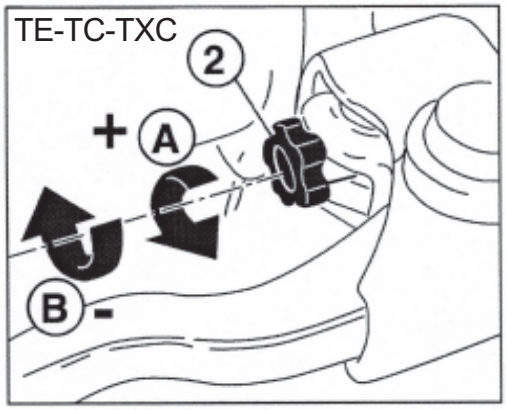

A: to encrease clearance
B: to decrease clearance

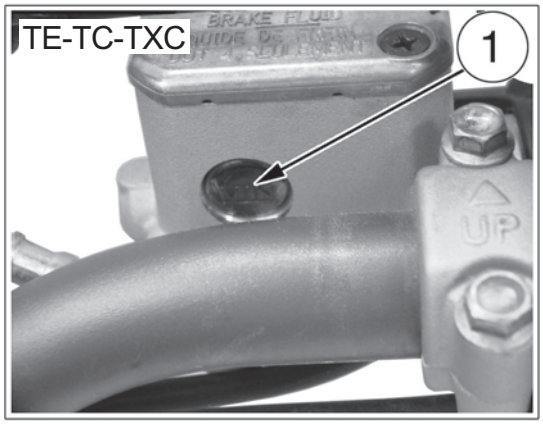

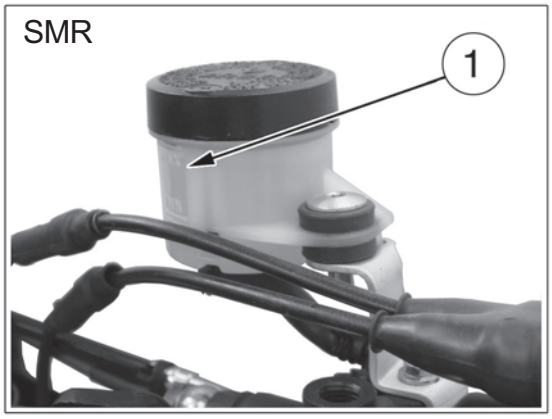

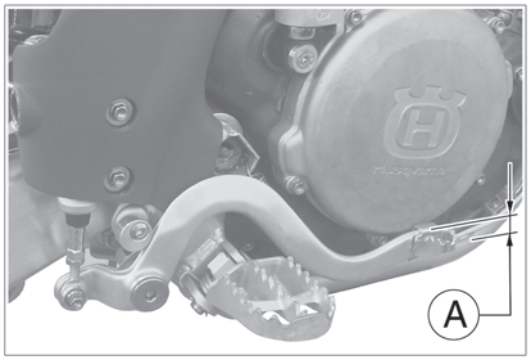

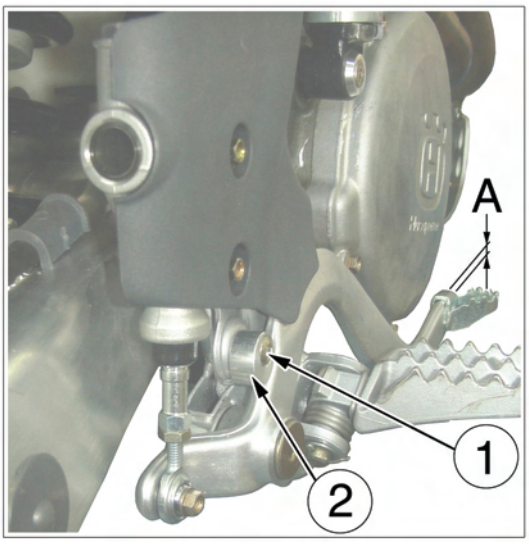

Rear brake pedal position adjustment

The position of the rear foot brake pedal as to the footrest may be adjusted according to the individual needs. For the adjusting proceed as follows:

- loosen the screw (1);
- turn the cam (2) in order to adjust the brake pedal idle stroke (A);
- the operation done, tighten the screw (1).

The adjusting operation carried out, adjust the idle stroke of the pedal as shown on page D.19.

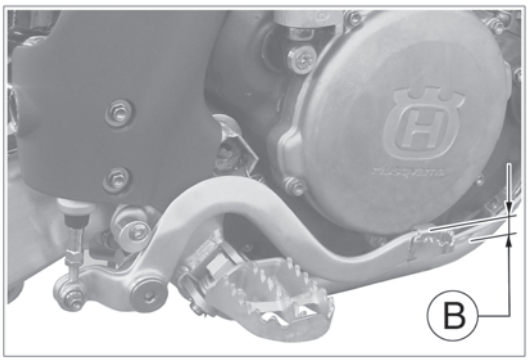

Rear brake idle stroke adjustment
The rear brake foot pedal should have a (B) 5 mm (0.2 in.) idle stroke before starting the true braking action. Should this not happen proceed as follows:
- loosen nut (3);
- operate the pump rod (4) to increase or decrease the idle stroke;
- tighten nut (3) at the end of the operation.

⚠: When the idle stroke figures are not met, the brake pads will be subjected to a fast wear that may bring to the TOTAL BRAKE INEFFICIENCY.

⚠: If the brake pedal feels mushy when it is applied, there may be air in the brake lines or the brake may be defective: CHECK THE BRAKING SYSTEM (pag. L.8).

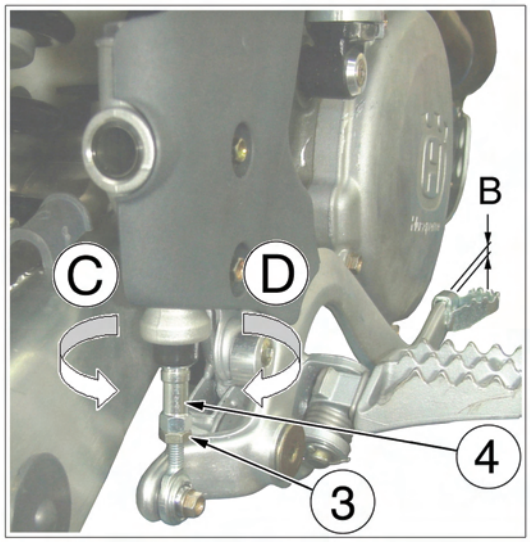

C: to encrease clearance
D: to decrease clearance

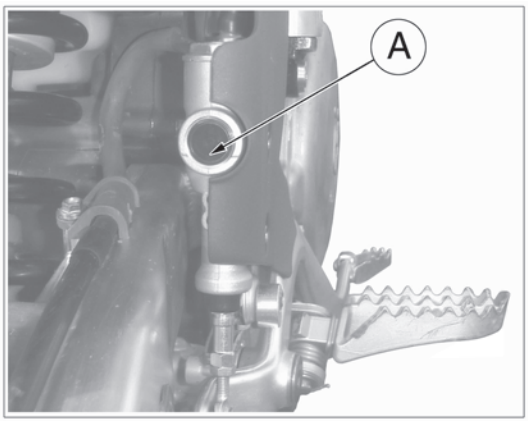

Checking the rear brake fluid level
The level (A) must be set between the pump tank notches of MIN and MAX.

Checking the engine oil level

By keeping the motorcycle on a flat surface, in vertical position, remove the control screw (1) and check the oil should just barely escape from the hole on the R.H. cover. To fill up, remove the filler cap (2).

: Have this operation made with warmed-up engine.

: Be careful not to touch hot engine oil.

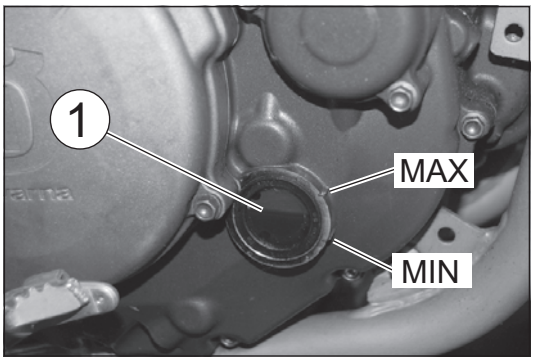

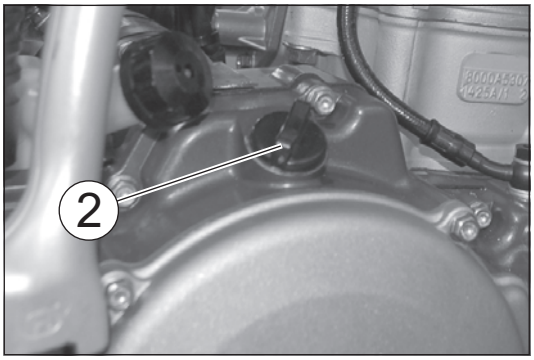

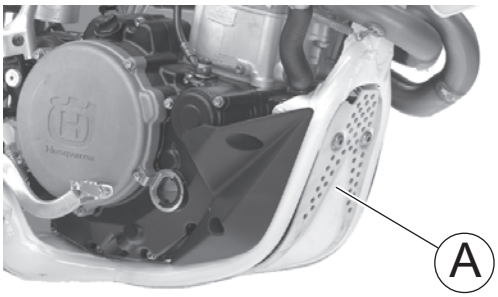

Engine oil replacement and bag filters-cartridge filter cleaning or replacement

Drain the oil with WARM ENGINE; proceed as follows:
- remove oil filler cap (2);
- even if not necessary, remove the engine guard (A);
- place an oil drain pan under the engine block;
- remove the oil drain cap (3), drain the used oil completely then clean the magnet on the cap;
- remove the three filters (5), (6) and (7) on the L.H. side of the engine, check O-Rings for wear then clean filters with fuel.

Reassemble using the reverse procedure.

In order to replace the filter cartridge (4), unscrew the three fastening screws then the filter cartridge cover;
- after filters replacement, reassemble the drain cap (3), the engine guard (A) then pour the recommended oil quantity.

Reassemble, on engine L.H. side, filter (5-4) (8 Nm-0,8 Kgm-5.8 ft/lb) e (6) (25 Nm-2,55 Kgm-18.4 ft/lb) ed inferiormente il tappo (2) scarico olio (25 Nm-2,55 Kgm-18.4 ft/lb).

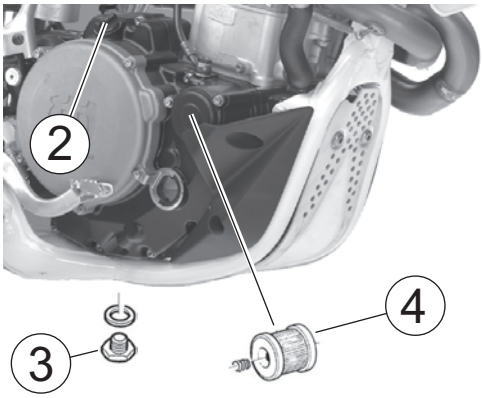

Be careful not to touch hot engine oil.

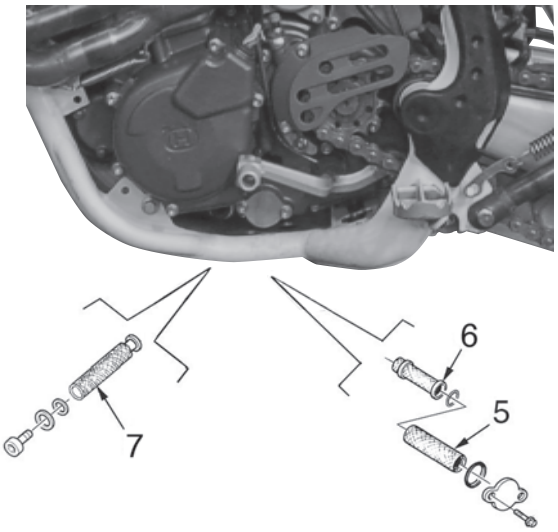

Coolant level check

Check level (1) in right-hand radiator when engine is cold (place the motorcycle so that it is perpendicular to the ground). The coolant should be approximately 10 mm above cells and besides, on TE and SMR models, it doesn't exceed the middle of the expansion tank (2) located in front of the rear shock absorber.
The radiator cap (3) is provided of two unlocking positions, the first being for the previous pressure discharge in the cooling system.

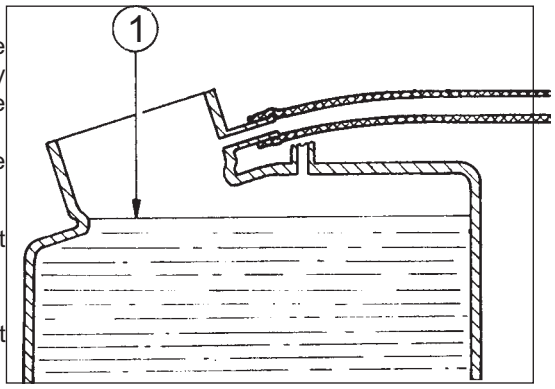

: Avoid removing radiator cap when engine is hot, as coolant may spout out and cause scalding.

TE-SMR: Since the cooling fan (A) can be activated even when the start switch is in OFF position, always keep a safe distance from the fane vanes.

: Difficulties may arise in eliminating coolant from varnished surfaces.
If this occurs, wash off with water.

Replacement of coolant

Place a vessel on the R.H. side of the cylinder, under the coolant drain screw (3).
FIRST remove the screw (3) then SLOWLY open the R.H. radiator cap (4); slope the motorcycle on the right side to drain the coolant easily in the vessel.
Reassemble the screw (3).
Pour the necessary quantity of coolant in the radiator then warm up the engine in order to eliminate any possible air bubble. Periodically check the connecting hoses (see "Periodical maintenance card" page B.4-B.7); this will avoid coolant leakages and consequent engine seizure. If hoses (B) show cracks, swelling or hardenings due to sheats desiccation, their replacement shall be advisable.
Check the correct tightening of the clamps (C).

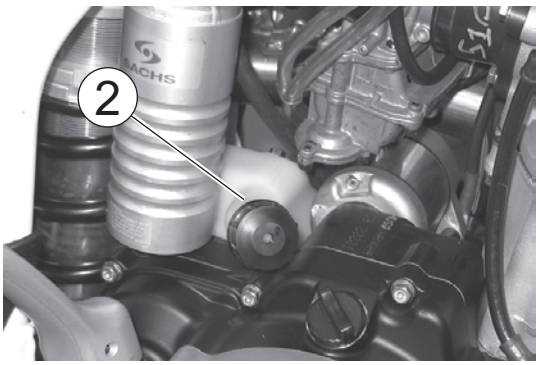

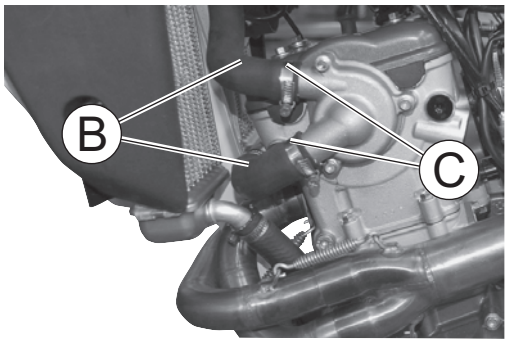

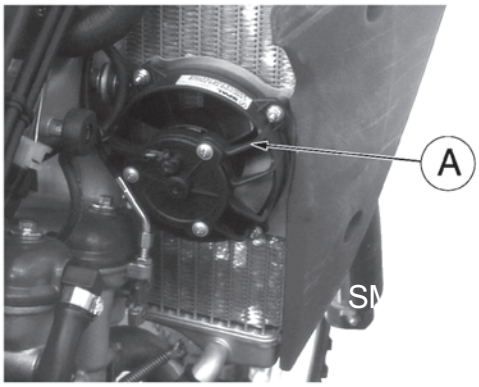

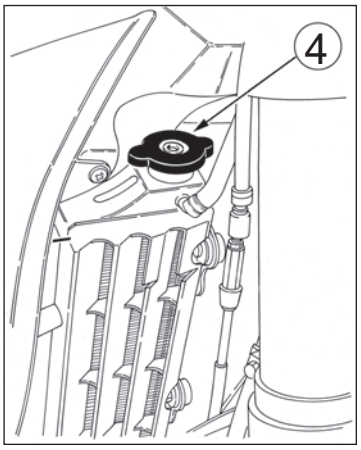

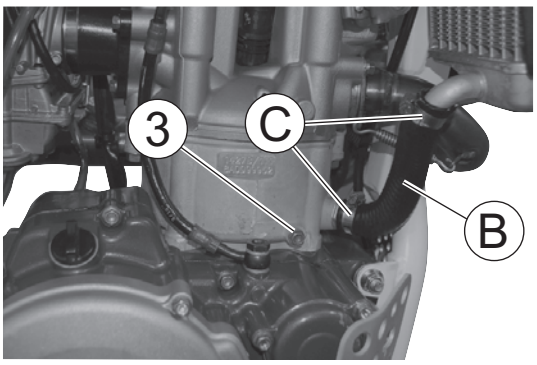

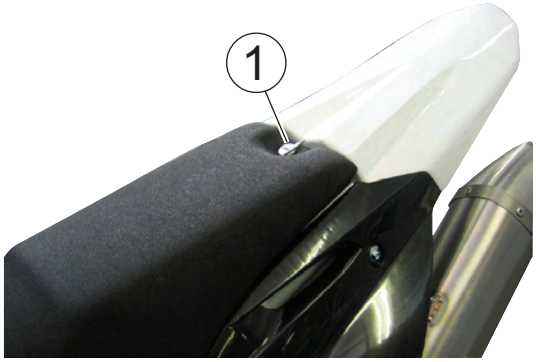

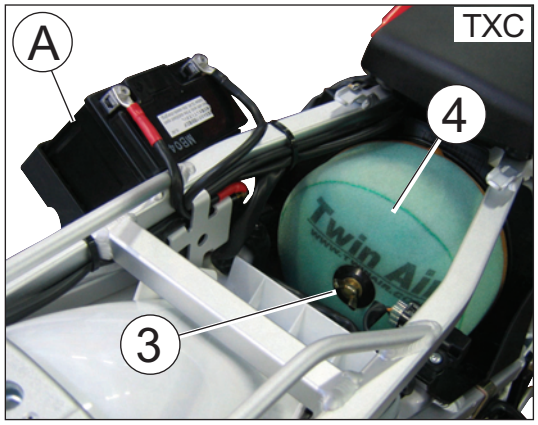

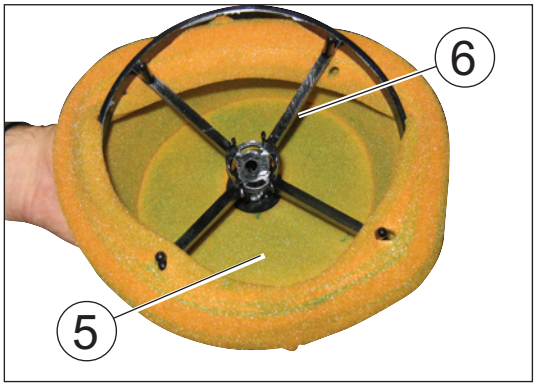

Air filter check (TC-TXC)
Turn rear pin (1) counterclockwise, remove it and release the saddle from the front fastening screw.
TXC: Take out the battery (A) and place it sideways on the vehicle.
To gain access to the air filter, lift a little the electronic power unit (2). Remove screw (3) and the filter (4). Separate filter (5) from frame (6).

AIR FILTER AND CLEANING
Wash filter with a specific detergent (AGIP" Filter clean foam air detergent fluid" or similar) then dry it fully (wash filter with gasoline only in case of necessity). Plunge filter in special oil for filters (AGIP "Foam air filter protection oil" or similar), then wring it to drain superfluous oil.

⚠: Do not use gasoline or a low flash-point solvent to clean the element. A fire or explosion could result.

⚠: Clean the element in a well ventilated area, and do not allow sparks or flames anywhere near the working area.

ASSEMBLY
To ensure tight fit, slightly (C) grease filter edge on side facing filter housing. While re-inserting the filter into its housing, make surs that piece (A) is turned upwards and edge (B) is on the left lower side of the filter case. Reassemble the parts previously removed (battery: connect the positive cable first).

: If the element assembly is not installed correctly, dirt and dust may enter and the engine resulting in rapid wear of the piston rings and cylinder.

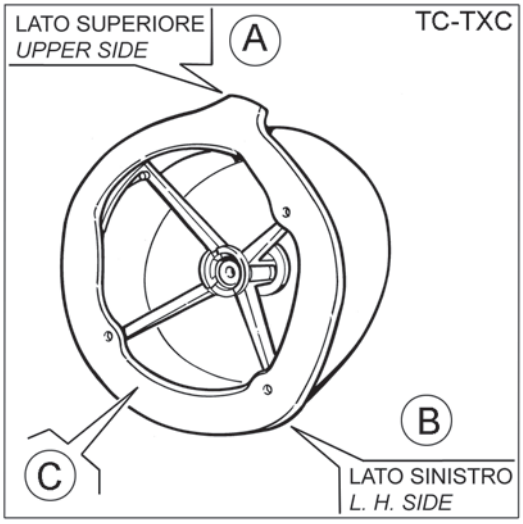

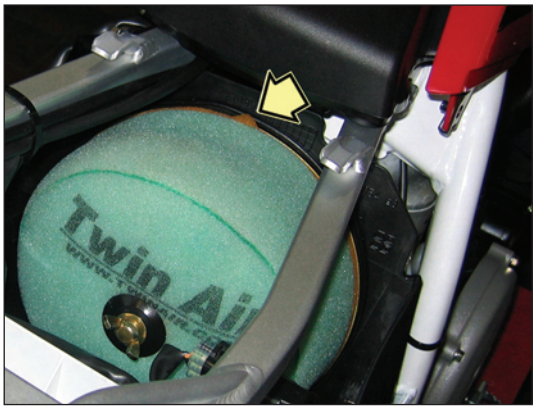

Air filter check
Turn rear pin (1) counterclockwise, remove it and release the saddle from the front fastening screw.
TXC: Take out the battery (A) and place it sideways on the vehicle.
To gain access to the air filter, lift a little the electronic power unit (2). Remove screw (3) and the filter (4). Separate filter (5) from the exhaust silencer (6).

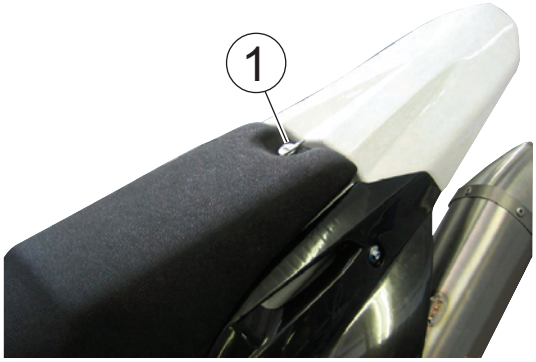

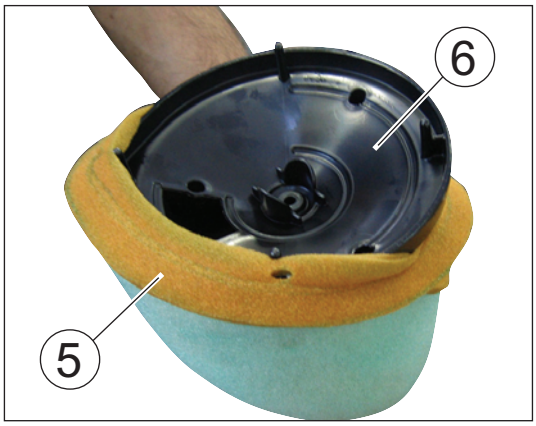

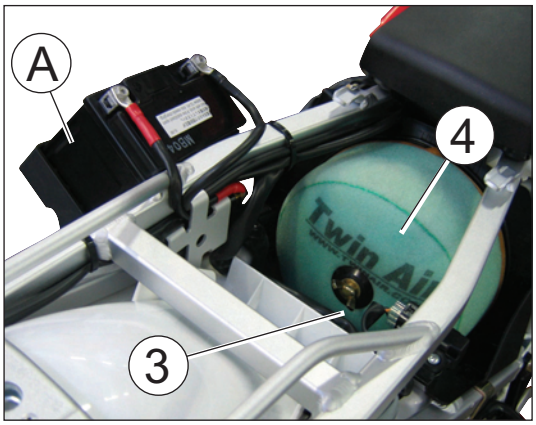

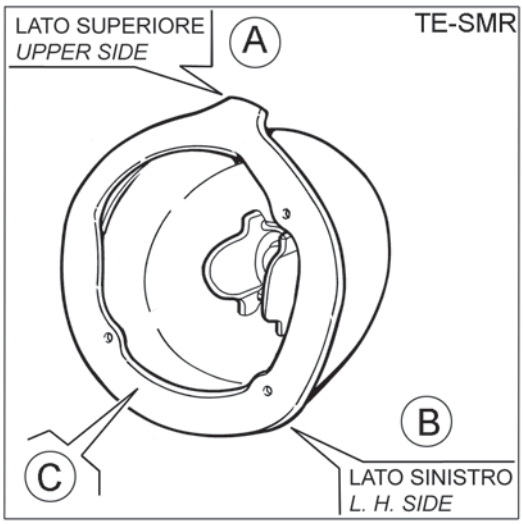

AIR FILTER AND CLEANING

Wash filter with a specific detergent (AGIP" Filter clean foam air detergent fluid" or similar) then dry it fully (wash filter with gasoline only in case of necessity). Plunge filter in special oil for filters (AGIP "Foam air filter protection oil" or similar), then wring it to drain superfluous oil.

: Do not use gasoline or a low flash-point solvent to clean the element. A fire or explosion could result.

: Clean the element in a well ventilated area, and do not allow sparks or flames anywhere near the working area.

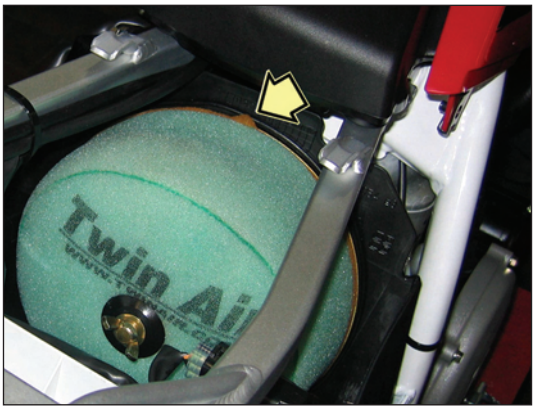

ASSEMBLY

To ensure tight fit, slightly (C) grease filter edge on side facing filter housing. While re-inserting the filter into its housing, make surs that piece (A) is turned upwards and edge (B) is on the left lower side of the filter case. Reassemble the parts previously removed (battery: connect the positive cable first).

: If the element assembly is not installed correctly, dirt and dust may enter and the engine resulting in rapid wear of the piston rings and cylinder.

Secondary transmission chain adjustment

Chain should be checked, adjusted and lubricated as shown on the Maintenance Chart (page B.5-B.8) to ensure security and prevent excessive wear. If the chains becomes badly worn or is poorly adjusted (i.e., if it is too loose or too taught), it could escape from sprocket or break.

To adjust the rear chain, it is necessary to lower the rear part of motorcycle so to line up the drive sprocket axle, the rear swing arm axle and the rear wheel axle as shown on drawing. Then let turn three times the rear wheel. Now the chain should not be tight. (Fig. A).

Fast adjustment (Fig. B)

Insert a bushing (a) with a 35 mm diameter (or with the same thickness) as shown in the image and make sure the lower section (C) of the chain is slightly taut.

If this is not the case, proceed as follows:

- loosen the nut (1) of the wheel axle on the right side with a 27 mm Allen wrench;
- loosen the check nuts (2) on both chain adjusters with a 12 mm wrench and act on the screws (3) until the proper tension level is restored;
- once tension has been adjusted, tighten the check nuts (2) and the wheel axle nut (1).

After the adjustment, always check the wheel alignment and tighten the wheel axle fully (142.1 Nm- 14.5 kgm- 104.8 ft/lb).

Fig. B

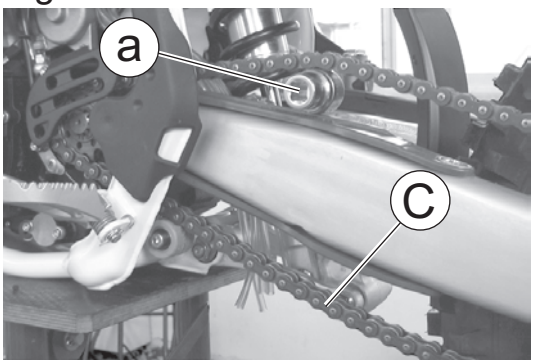

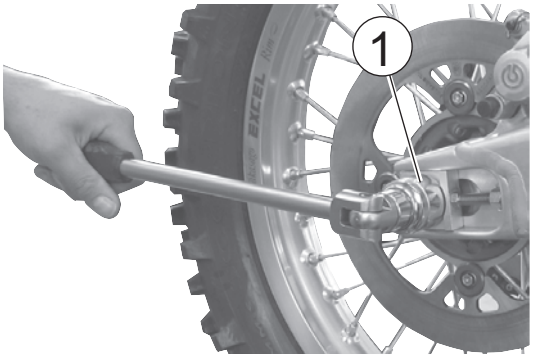

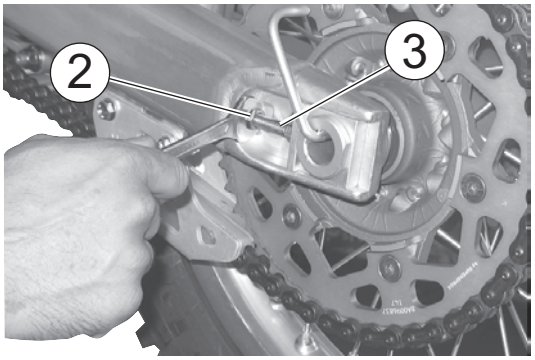

Fig. A

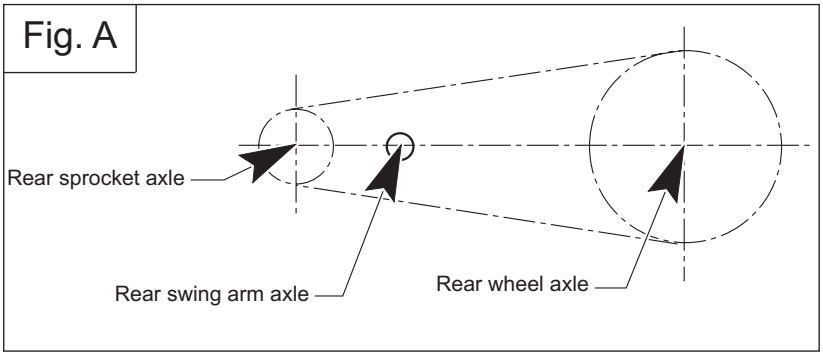

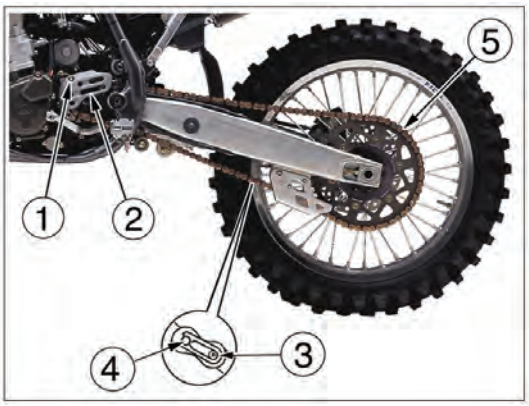

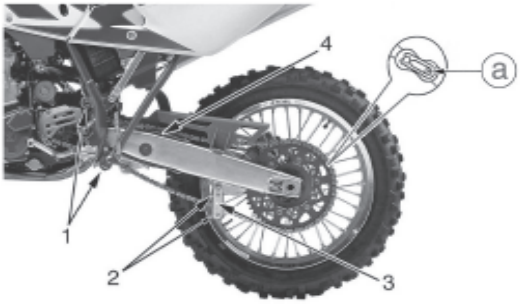

1- Chain tension roller
2- Chain driving roller
3- Chain guide
4- Chain slider
a- Joint spring

Lubricating the chain
Lubricate the chain following these instructions.

: Never use grease to lubricate the chain. Grease helps to accumulate dust and mud, which act as abrasive and hepl to rapidly wear out the chain, the sprocket, and the crown.

Disassembling and cleaning
When particularly dirty, remove and clean the chain before lubrication. Work as follows:
- set a stand or a block under the engine and see that the rear wheel is lifted from the ground;
- remove: screws (1), transmission sprocket guard (2), clip (3), master link (4) and transmission chain (5). To reassemble, reverse the above procedure.

Check that the chain is neither worn out nor damaged. If the rollers or the links are damaged, replace the chain by following the instructions given in the Periodical Maintenance Table. Check that neither the sprocket nor the crown are damaged. Wash and clean the chain as described hereunder.

Washing the chain without OR (TC)
Wash using either oil or diesel oil. When using gasoline or tricloroetilene, clean and lubricate the chain to prevent oxidation.

Washing the chain with OR (TXC-TE-SMR)
Wash using oil, diesel oil, or paraffin oil. Never use gasoline, tricloroetilene, or solvents, as the OR may suffer damages. Use instead special sprays for chains with OR.

Lubricating the chain without OR (TC)
First dry, then plunge the chain in a bisulphide molybdenum lubricant, or in high viscosity engine oil. Warm up the oil before use.

Lubricating the chain with OR (TXC-TE-SMR)
Lubricate all metallic and rubber (OR) elements using a brush, and use engine oil with SAE 80-90 viscosity for the internal and external parts.
If the chain has been cut, reassemble using a joint. Assemble the joint spring (a) by turning the closed side to the chain direction of rotation as shown in figure.

: Even if all the joints are reusable when in good conditions, for safety purposes we advise using new joints when reassembling the chain.
Accurately adjust the chain as shown on page D.21.

: The chain oil has NEVER to get in contact with the tires or the rear brake disk.

: Chain tension rollers, chain driving roller, chain guide, chain runner
Check the wear of the above mentioned elements and replace them when necessary.

: Check the chain guide alignement, and remember that a bent element can cause a rapid wear of the chain. In this case, a chain fleeting from the sprocket may ensue.

Adjusting the suspensions according to particular track conditions
The following information is a useful guide for setting up the suspensions according to the road conditions.
Always start from the standard calibration before making any change on the suspensions. Afterwards, increase or decrease the adjusting clicks one at a time.

HARD GROUND
Fork: softer compression adjustment.
Shock absorber: softer compression adjustment.
The softer adjustment for the two suspensions is also used both in compression and in extension when driving at top speed, in order to have better grip of the tires.

SANDY GROUND
Fork: have a harder compression adjustment, or replace the standard spring with a harder one, and make a softer compression adjustment and a harder extension adjustment at the same time.
Shock absorber: have a harder compression, and expecially a harder extension adjustment. Work on the spring preload to lower the motorcycle rear side.

MUDDY GROUND
Fork: have a harder compression adjustment, or replace the standard spring with a harder one.
Shock absorber: have a harder compression and extension adjustments, or replace the standard spring with a harder one. Work on the spring preload to lift the motorcycle rear side.
We advise replacing the springs of both suspensions to compensate the weight increase due to the piling of the mud.

NOTE:
When the fork results as either too soft or too hard for any adjustment conditions, check the oil level inside the forkrod.
The level can either be too low or too high. Remember that too much oil inside the fork will involve a more frequent air drainage. When the suspensions do not react to the changes of calibration, check that the adjusting units are not blocked.
The standard calibrations, the available springs and the adjustment procedures are shown on the next pages.

Adjusting the shock absorber

The rear shock absorber must be adjusted according to the rider weight and track conditions.
Proceed as follows:

1. With motorcycle on the stand, measure distance (A).
2. Take the normal riding position on the motorcycle with all your riding apparel.
3. With somebody's help, take the new distance (A).
4. The difference between these two measurements constitutes the "SAG" of the motorcycle's rear end.

Suggested SAG: 4 in. with cold shock absorber. 3.7 in. with warmed up shock absorber.

5. To get the right SAG according to your weight, adjust the shock absorber spring preload (D.25).

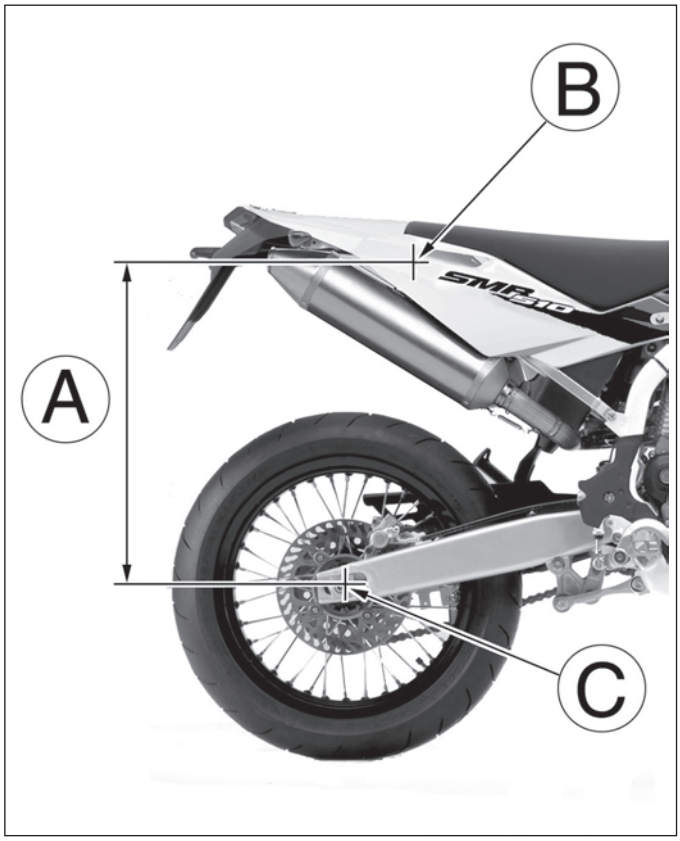

B: axis of the panel screw
C: axis of rear wheel pin

Adjusting the shock absorber spring preload

Follow the instructions below to perform the operation:

1. First turn the fastening rear pin (1) anticlockwise, then remove the saddle, loosen the screws (2) and remove the right side panel (3).
2. TC-TE-TXC-SMR: Clean the ring nut (4) and the adjusting ring nut (5) of the spring (6).
3. TC-TE-TXC-SMR: Loosen the check ring nut with a hook wrench or with an aluminium punch.
4. Turn the adjusting ring nut as required.
5. TC-TE-TXC-SMR: after adjusting according to the weight or riding style of the rider, tighten the check ring nut (tightening torque 5 Kgm).
6. Mount the right side panel and the saddle.

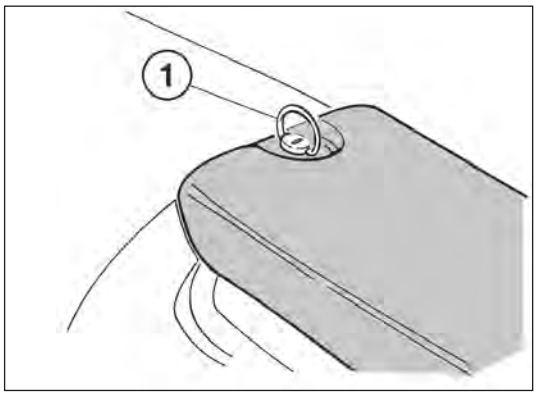

: Be careful not to touch the hot exhaust pipe while adjusting the shock absorber.

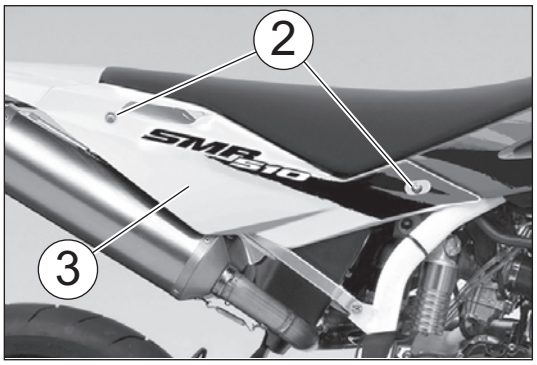

The standard length of the preloaded spring is as follows:
TE: 243,5÷246,5 mm SMR: 236,5÷239,5 mm TC-TXC: 245,5÷248,5 mm

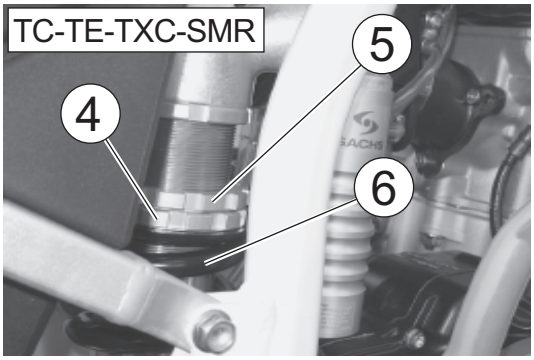

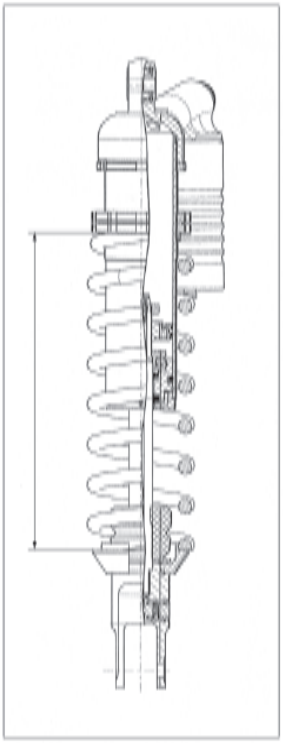

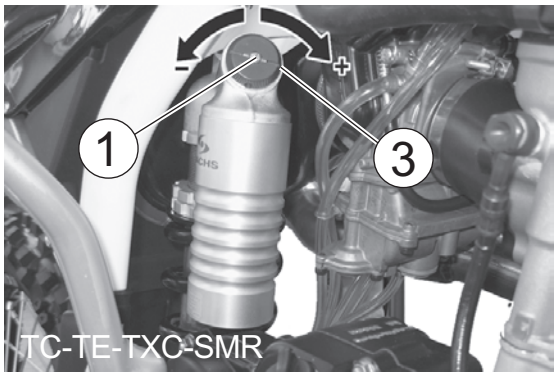

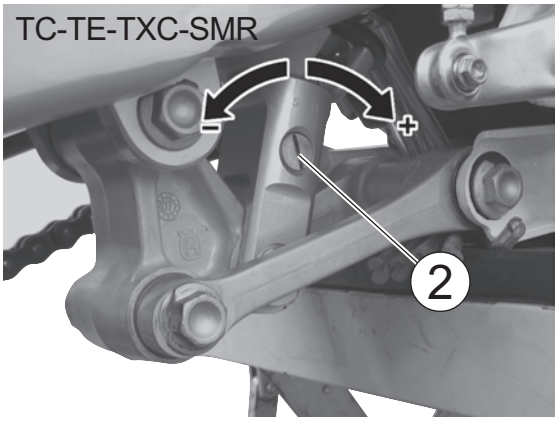

Shock absorber hydraulic brake adjustment
Adjustment of the compression stroke is independent from the rebound stroke.

A) COMPRESSION - Standard calibration:
1) Low damping speed:
 -15 clicks (± 2 clicks)
(adjuster 1)

2) High damping speed:
 -15 clicks (± 2 clicks)
(adjuster 3)
To reset the standard calibration, turn upper adjusters (1) and (3) clockwise until reaching fully closed position. Return then back for the mentioned clicks. In order to obtain a smooth braking action, turn the adjusters anticlockwise. Reverse the operation in order to obtain a harder braking action.

B) EXTENSION - Standard calibration:
 -18 clicks (± 2 clicks)
To reset the standard calibration, turn lower adjuster (2) clockwise until reaching fully closed position. Return then back for the mentioned clicks. In order to obtain a smooth braking action, turn the adjuster anticlockwise. Reverse the operation in order to obtain a harder braking action.

Shock absorber springs

STANDARD
K=5.4 kg/mm (TE-TXC 250; code 8000 98504)
K=5.6 kg/mm (TE-TC-TXC 450/510; code 8000 H0076)
K=6.4 kg/mm (SMR; code 8000 98520)

Adjusting the front fork

a) COMPRESSION (LOWER REGISTER)
Standard calibration: -12 clicks (TE-SMR); -15 clicks (TC-TXC).
Remove plug (B) and turn register (A) clockwise until the position of fully closed is reached then, turn back by the mentioned clicks.To obtain a smoother braking action, turn the register anticlockwise. Reverse the operation in order to obtain a harder action.

b) EXTENSION (UPPER REGISTER)
Standard calibration: -15 clicks (TC-TXC); -12 clicks (TE-SMR).
To reset standard calibration turn register (C) clockwise to reach the position of fully closed; then, turn back by the mentioned clicks. To obtain a smoother braking action, turn the register anticlockwise. Reverse the operation in order to obtain a harder action.

c) AIR VENT (to carry out after each competition, or monthly).
TE-SMR: Set the motorcycle on its central stand, fully extend the fork and loosen the valve (D). Tighten the valve after this operation.
TC-TXC: Set the motorcycle on its central stand, fully extend the fork, remove the cap (E) and press the valve with pointed object. Reassemble the cap.

⚠: NEVER loosen screw (F).

WARNING: Never force the adjusting screws beyond the maximum opening and closure positions.

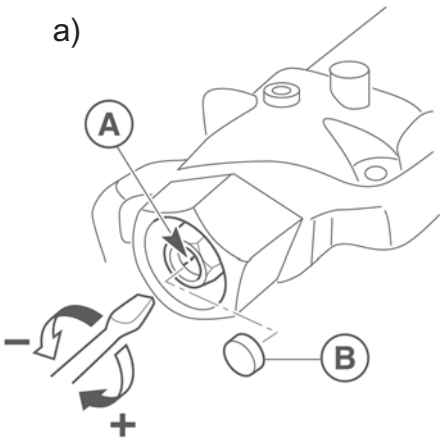

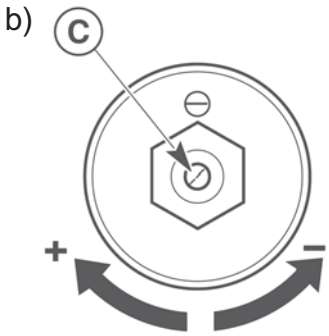

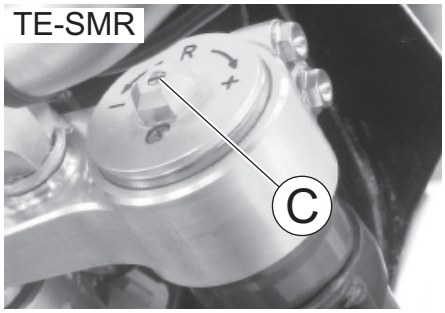

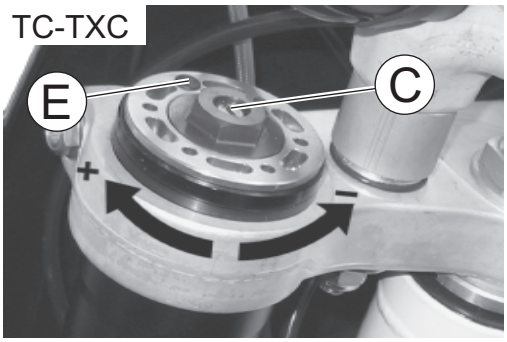

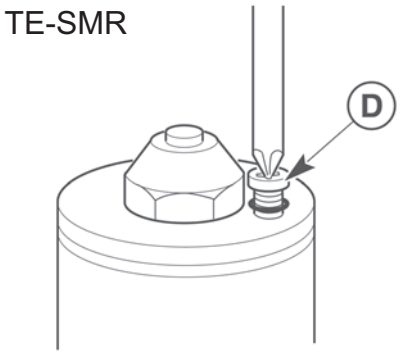

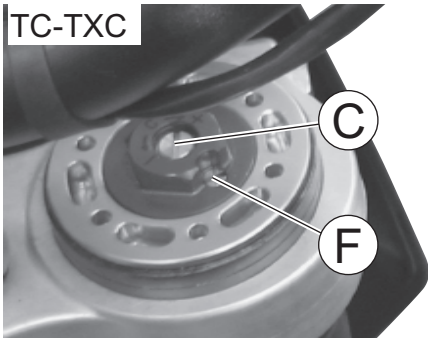

Front fork springs
STANDARD
K=4.5 N/mm (TE; A: spring + spacer code 8000 B1713)
K=4.8 N/mm (TXC 250; A: spring + spacer code 8000 B1690)
K=5.0 N/mm (TC-TXC 450/510; A: spring + spacer code 8000 B1716)
K=5.0 N/mm (SMR; A: spring + spacer code 8000 A7608)

TC-TXC

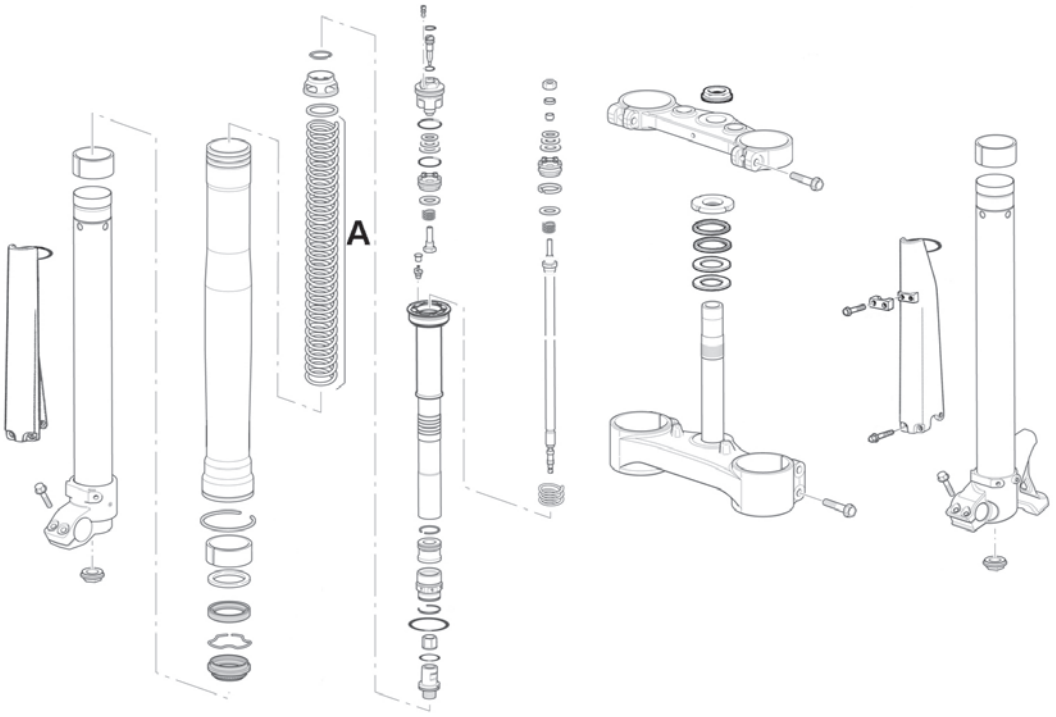

TE-SMR

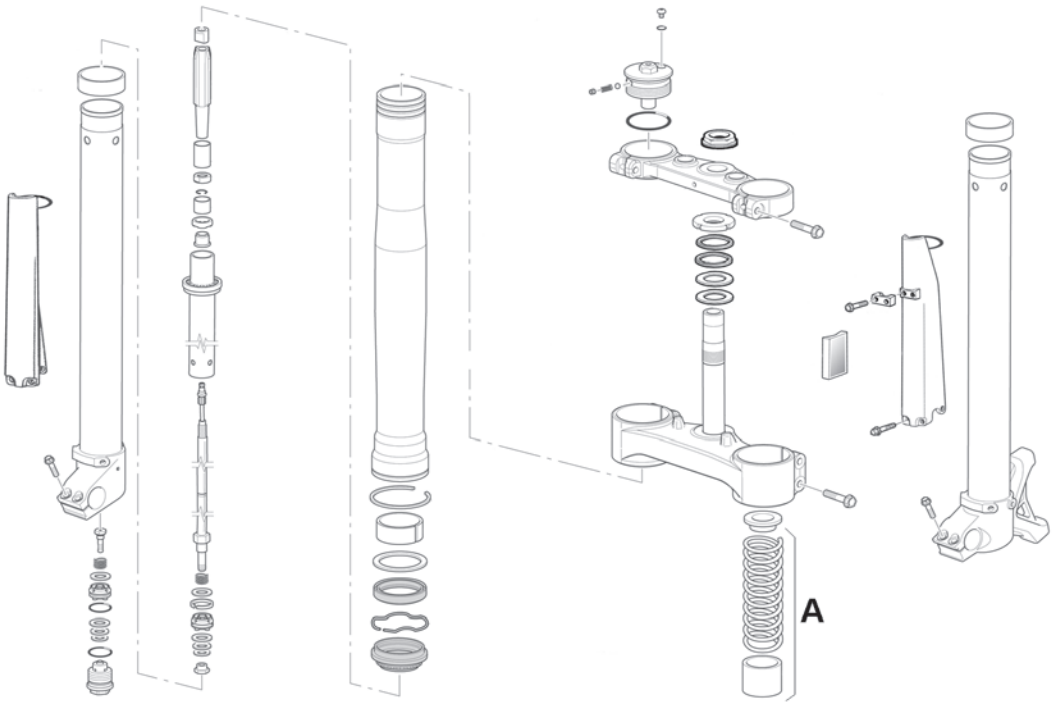

Steering bearings play adjustment

To ensure maximum safety, the steering should always be adjusted so that the handlebars rotate freely without play. To check steering adjustment, place kick stand or other support under the engine so that the front wheel is raised from ground. Place slight pressure on the tips of the handlebars to rotate steering; the handlebars should also rotate without effort. Stand in front of the motorcycle and grasp the lower end of the fork rods sliders moving them in the perpendicular direction to their axis.

If play is noticed, proceed with adjustment as follows:

- loosen steering sleeve nut (1);
- loosen four screws that fix steering head to fork rods (3);
- turn the steering ring nut (2) clockwise of the steering sleeve using a proper tool, to adjust play properly;
- tighten steering sleeve nut (1) to a torque setting of 57,9÷65,1 Lb/ft; (78,4÷88,3 Nm)
- tighten four screws on the steering head (3) to a torque of 22,5÷26,5 Nm (16.6÷19.5 Lb/ft).

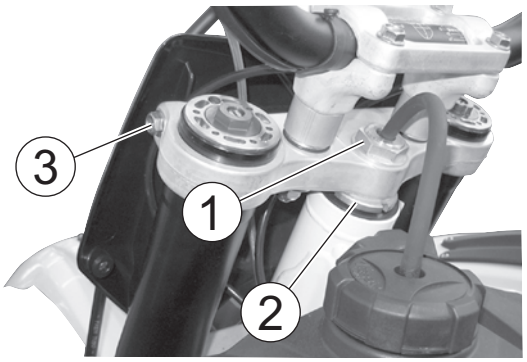

Lock adjustment

The lock can be changed, using the adjusting units on the sides of the steering tube, as follows: loosen the ring nut (4) and turn the adjusting screw (5) until you have the desired angle, then tighten the ring nut again (4). Change by the same amount on both sides.

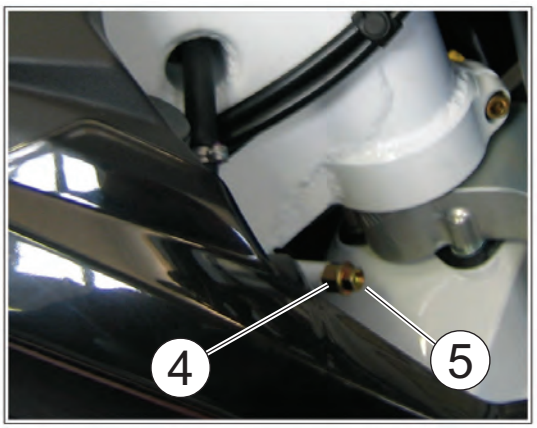

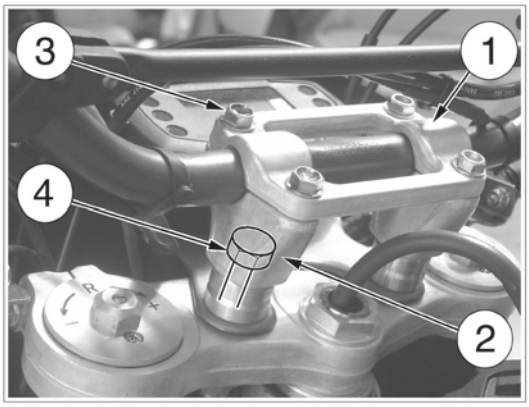

Handlebar position and height change (TE-TC-TXC-SMR)
The handlebar position (a) and height (b) can be changed for better suiting Your driving requirements. To effect these operations, remove the upper screw (3), upper clamp (1), lower screw (4) then lower clamp (2).
a) Handlebar position change
Turn the lower clamp (2) 180° to move forward or backward (10 mm- 0.04in.) the handlebar position with respect to the original setup.
b) Handlebar height change
Remove the lower spacer (A) then replace the screw (4) with a new one of L=65 mm (2.56 in.) height.
Once these operations are completed, tighten the screws (3) to 2,75-3,05 kgm (27-30 Nm; 19.9-22 Lb/fts) and the screws (4) to 2,0-2,2 kgm (19,6-21,6 Nm; 14.5-15.9 Lb/fts).

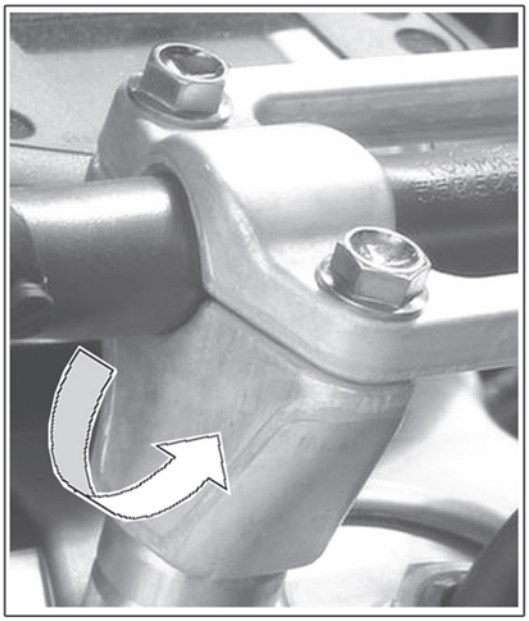

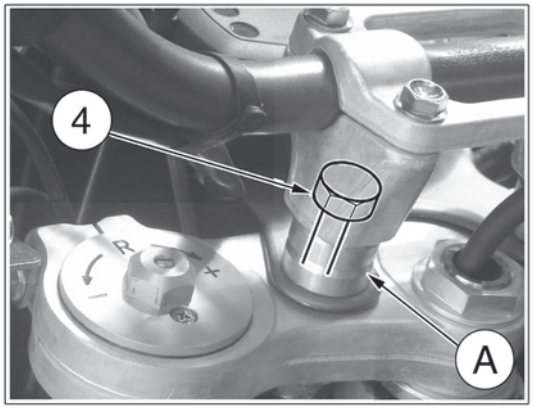

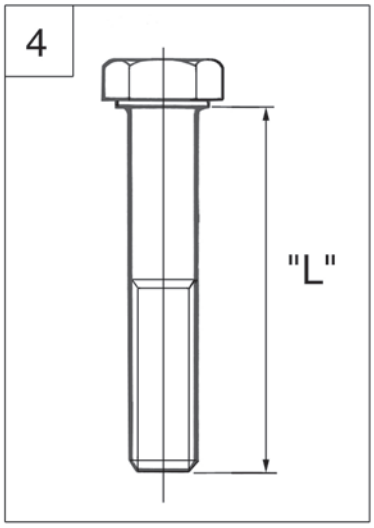

Checking the fuel hose
Check the hose (1) for leaks and replace it, if necessary.
Remove the fuel hose as shown on page E.23.

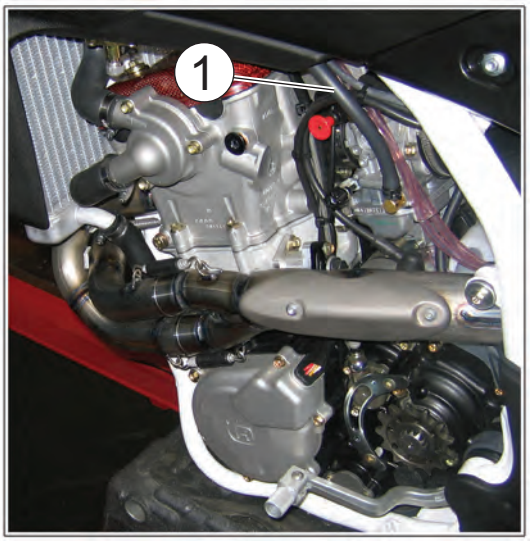

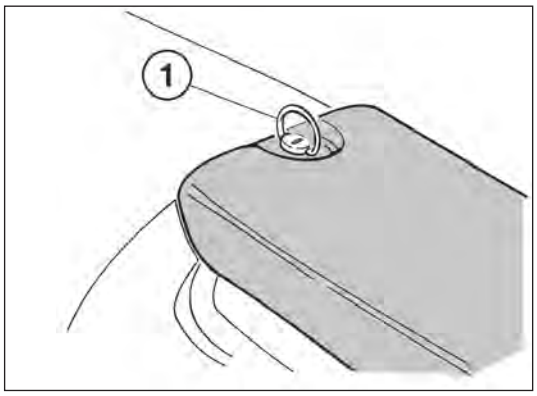

Replacing the muffler deadening material (TC-TE-TXC)
First turn counterclockwise fastening rear pin (1) then remove saddle, screws (2) and L.H. side panel (3). Using an 8 mm T-shaped spanner on the outside and a 10 mm T-shaped spanner on the inside, remove the locking screw (4) of the muffler. Remove the spring (5) and with an 8 mm T-shaped spanner remove the screw (8); then pull out the muffler.
Remove the six rear rivets (6), clamp and the exhaust terminal (7).
Remove innner pipe and replace the deadening material.
Reassemble L.H. side panel and saddle.

When diffuculties are found in removing the muffler, lightly beat with a rubber or plastic hammer.

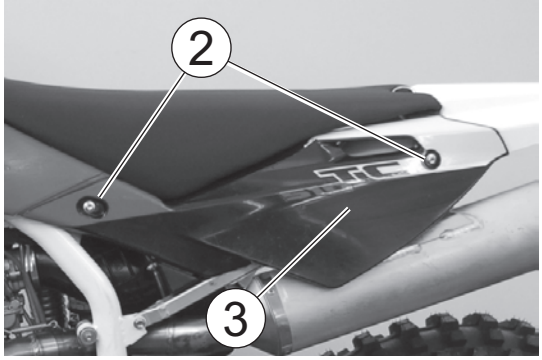

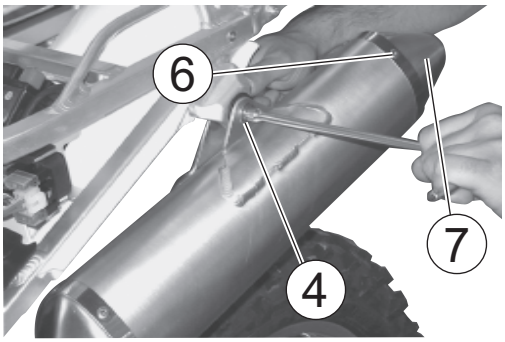

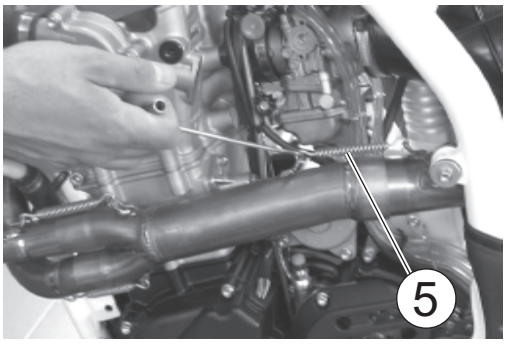

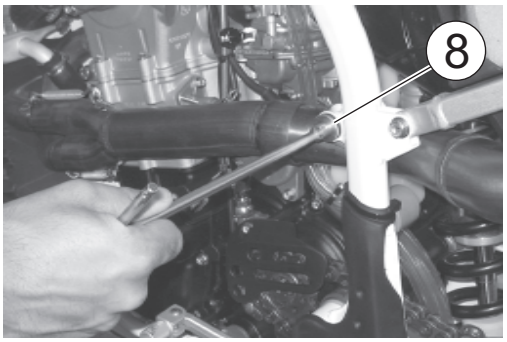

Replacing the muffler deadening material (SMR)
Remove the saddle after turning the locking back pin (1) anticlockwise, loosen the screws (2) with an 8-mm T-shaped spanner and remove the side panel (3) (do the same on the right side). Using an 8 mm T-shaped spanner on the outside and a 10 mm T-shaped spanner on the inside, remove the locking screw (4) of the muffler. Remove the spring (5) and pull out the muffler (A) o (B). Remove the four rear rivets (6), clamp and the exhaust terminal (7).
Remove innner pipe and replace the deadening material.
Reassemble L.H. side panel and saddle.

When diffuculties are found in removing the muffler, lightly beat with a rubber or plastic hammer.

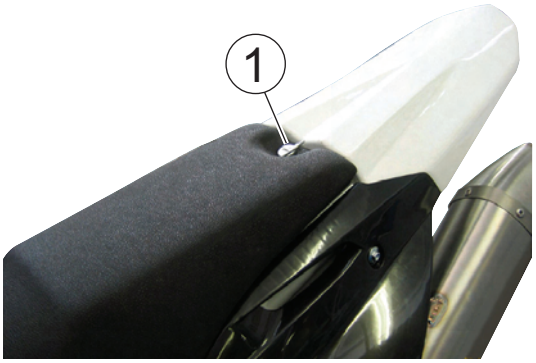

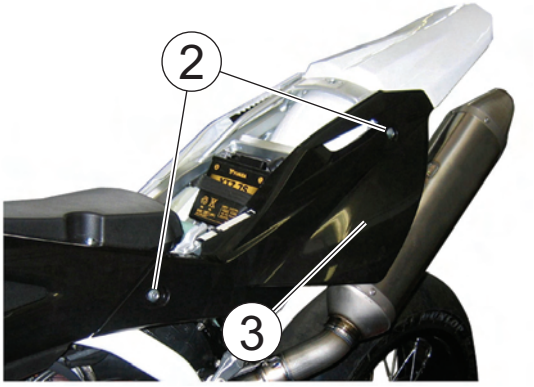

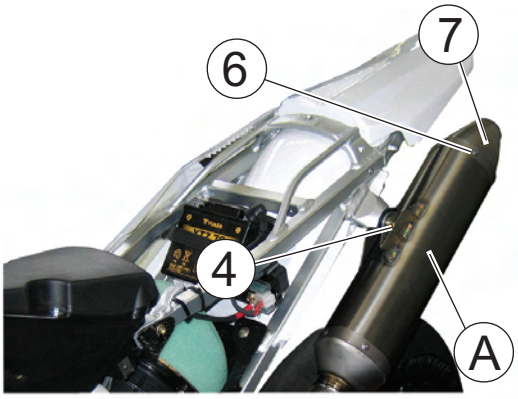

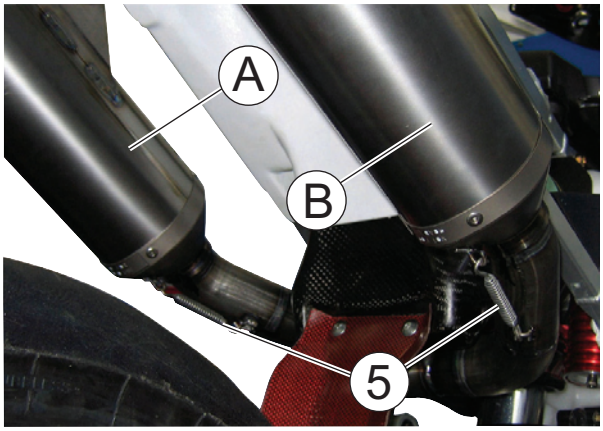

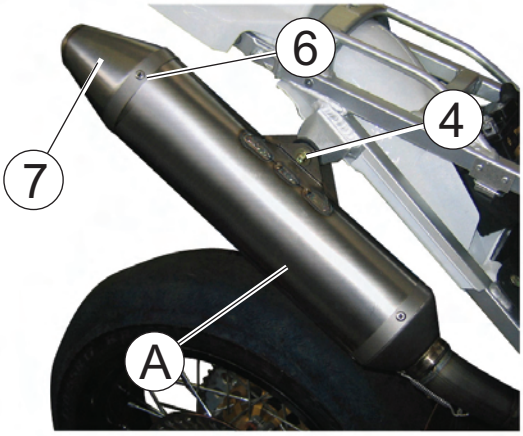

Checking the exhaust system
Remove the exhaust system components as shown on page E.20.
Check the exhaust pipe (1), (2), (3), (4) and silencer (5) for wear or damages.
Replace the component, if necessary.

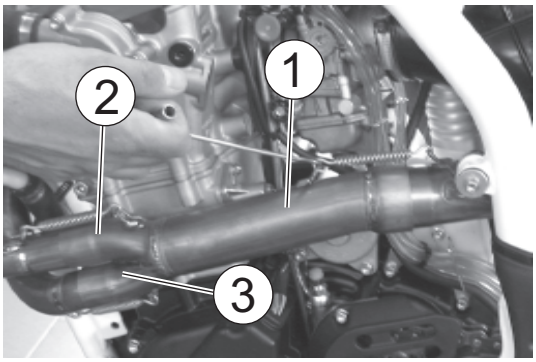

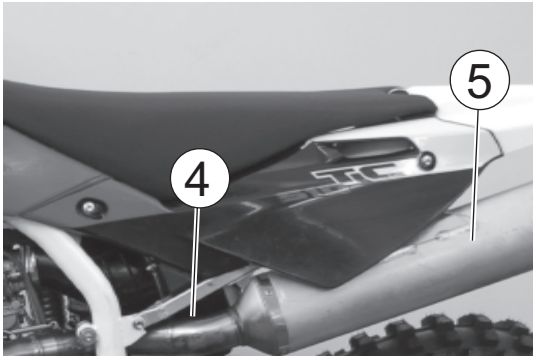

Section E

FOREWORD ..... E. 3

REMOVAL OF ENGINE FROM MOTORCYCLE ..... E. 4

PARTIAL DISMALTEMENTS
Removal of saddle and battery ..... E. 15
Removal of side panels ..... E. 16
Removal of rear frame with fender
(TE- SMR: with tail light) and air filter box assy ..... E. 17
Removal of exhaust system ..... E. 20
Removal of fuel tank, conveyors and spoiler ..... E. 23
Removal of cooling fan (TE-SMR), radiators and
coolant expansion tank (TE-SMR) ..... E. 25
Removal of electronic power unit C.D.I.,
electronic coil, voltage regulator and clutch hose ..... E. 26
Removal of secondary drive chain ..... E. 26

FOREWORD

The operations described in this section are referred to the removal of the engine from the motorcycle.
Nevertheless, in the case is had to effect operations on some parts of the motorcycle (as the access to the rear shock absorber, to the electric parts, to the wiring harness etc.), it can be necessary to effect some partial dismantlements. The descriptions that refer to these operations are listed beginning from the page E.15.

TE

LATO SINISTRO

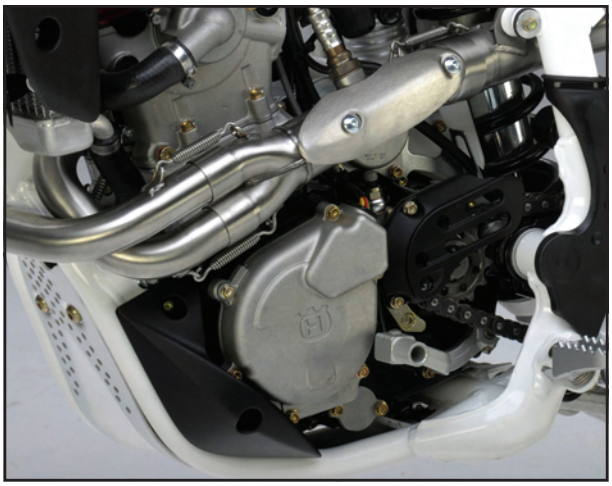

RIGHT SIDE

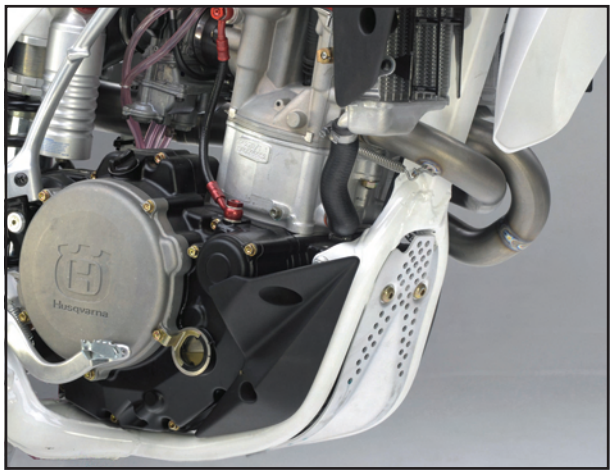

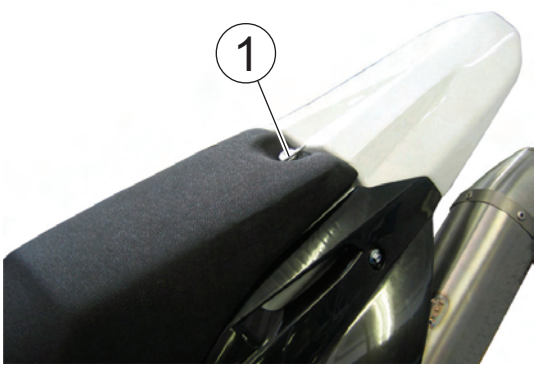

Removal of engine from motorcycle

1) Pages E.4-E.5: turn counterclockwise the rear fastening pin (1) and remove the saddle. Loosen the screws (2) and remove the side panels (3) and (4).
TE-SMR-TXC: first remove the BLACK negative cable, then the RED positive cable (when reassembling, first connect the RED positive cable, then the BLACK negative cable); release the elastic (5) and remove the battery (6) from its housing.
TXC: After battery removal, push ONCE THE ENGINE START BUTTON in order to discharge the condenser (7) fastened near the H.T. coil (8).

: After battery disassembly, DO NOT remove the condenser from the frame: in case of engine starting in this condition, the voltage regulator will be damaged.

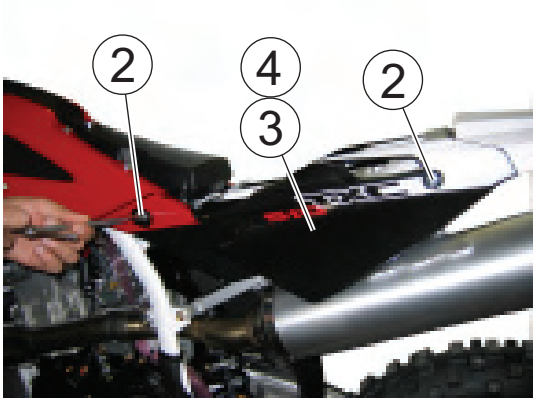

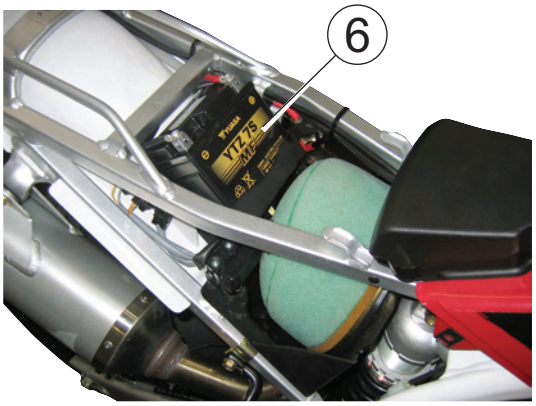

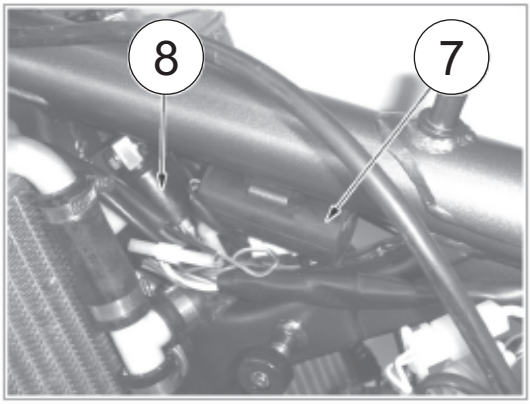

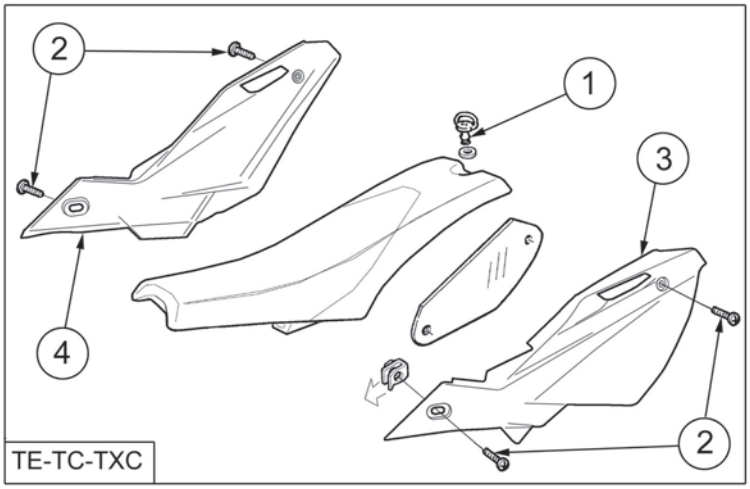

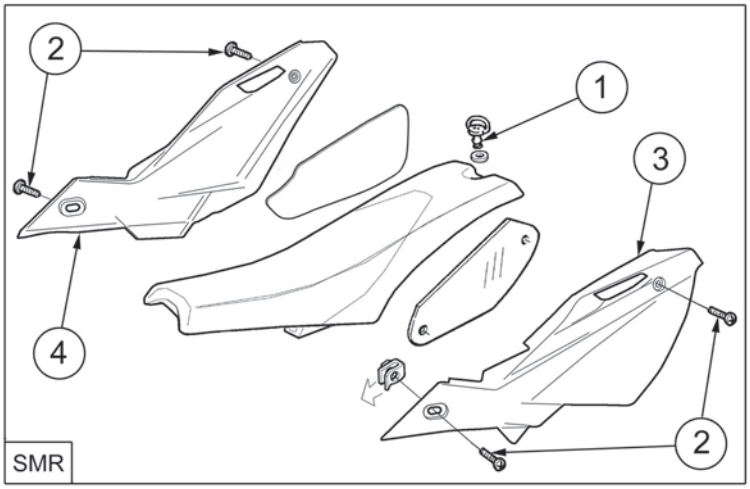

TC-TXC

2) Remove the breather hose (1) from the steering axle. Turn the ring nut of the fuel tap (2) anticlockwise to stop fuel flowing and loosen the clamp (3) on the carburettor fuel pipe; remove this pipe from the carburettor and pour the remaining fuel into a container.

Remove the fuel tank fastening screw (4) and, pushing upward slightly in the front zone of the conveyors, release them from the spoilers on the radiators. Remove the fuel tank assy. with conveyors.

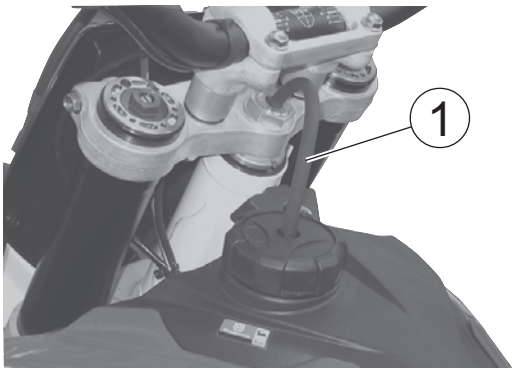

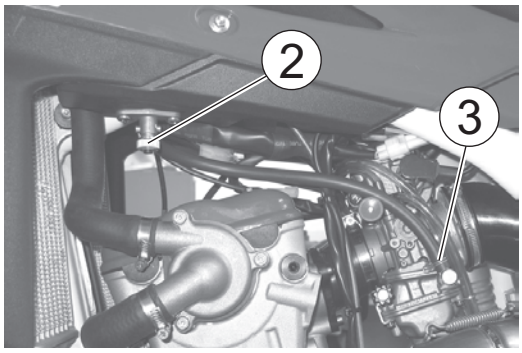

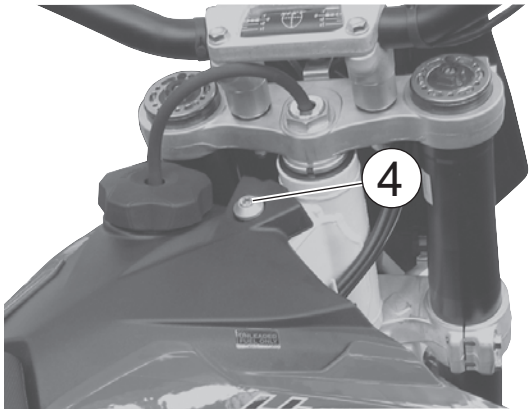

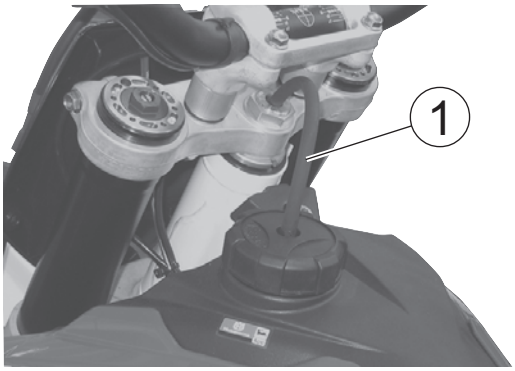

TE-SMR
2) Remove the vent pipe (1) from the steering pin. Remove the fastening screw (2) from the fuel tank by slightly pressing upward in the front area of conveyors and release the conveyors from spoilers on radiators. Disconnect the fuel pump connector from the main cable. Disconnect the feed line (B) from the outlet fitting (C) on the fuel pump on the lower rear part of the tank. Extract the tank with the conveyors.

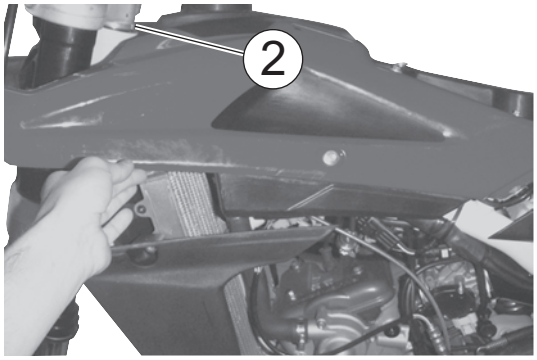

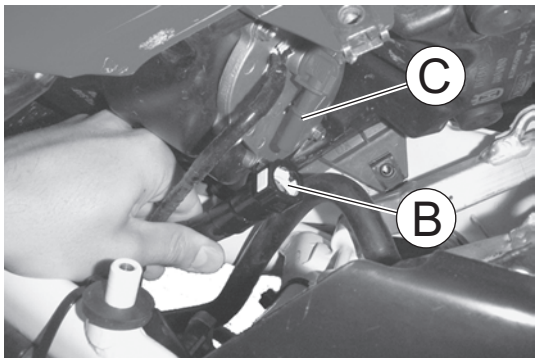

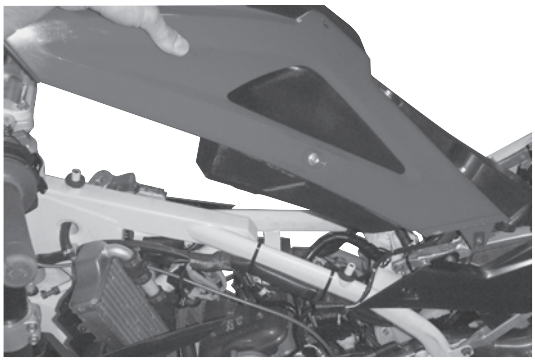

3) TE, TC, TXC: using an 8 mm T-shaped spanner on the outside and a 10 mm T-shaped spanner on the inside, remove the locking screw (1) of the muffler (4). Remove the spring (2) and with an 8 mm T-shaped spanner remove the screw (3); then pull out the muffler (4).

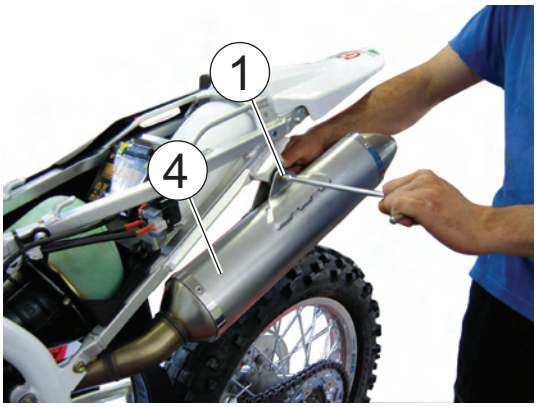

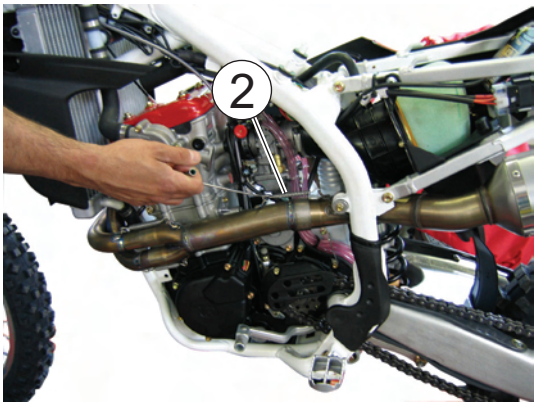

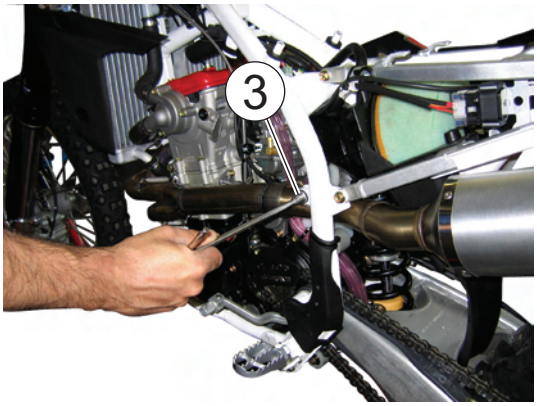

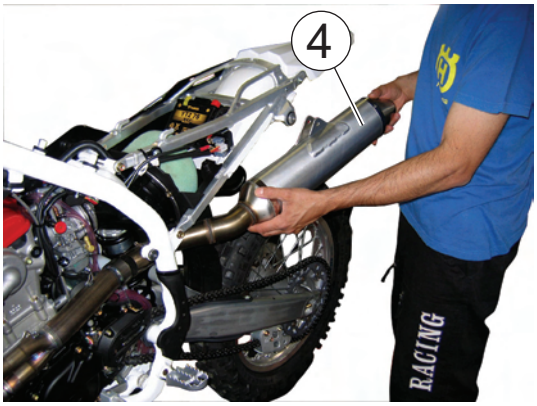

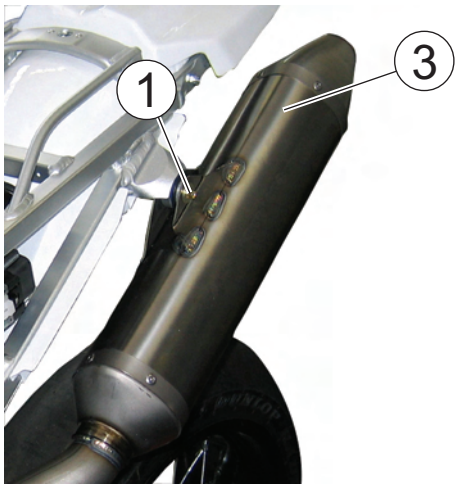

3) SMR: use an 8 mm T-wrench outside and a 10 mm T-wrench inside to remove the fastening screw (1) of silencers (3) and (4). Remove the spring (2) and extract silencers (3) and (4). Remove the springs (5) that retain front pipes (6) and (7) to intermediate pipe (8).

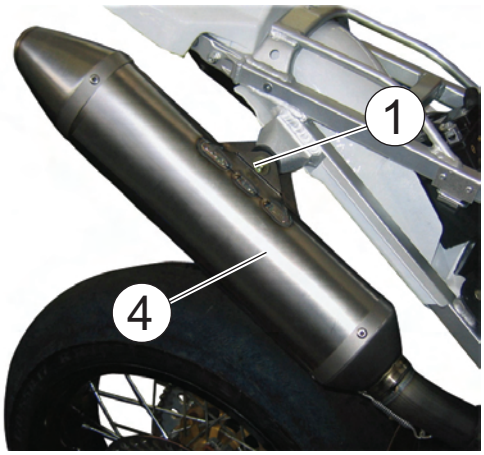

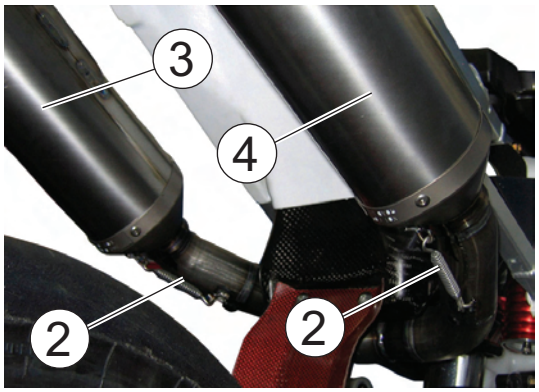

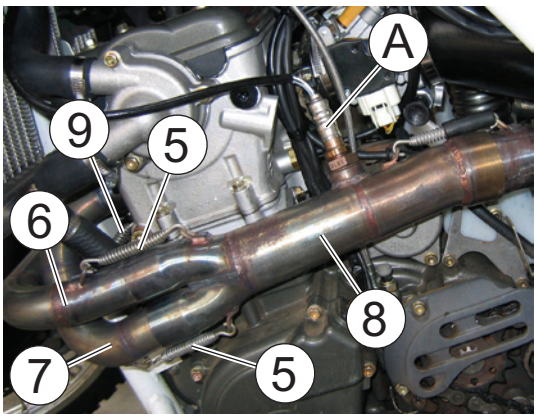

3) TE-SMR: remove the LAMBDA probe (A). Remove the intermediate pipe (8). Remove the springs (9) and remove pipes (6) and (7) from the cylinder head by gently hitting outward.

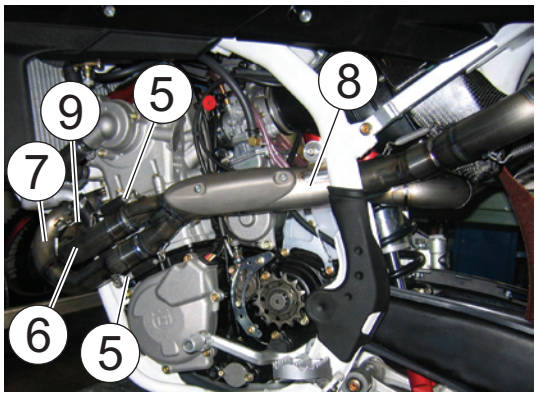

4) TC-TXC: Loosen the clamps (3) and (4) that fasten the carburetor to the intake manifold and air filter box manifold. Pull back the carburetor to free it from the intake manifold and extract the carburetor from the right side of the motorcycle. Remove the carburetor floater chamber lower screw (5), the floater chamber then eliminate the remaining gasoline.

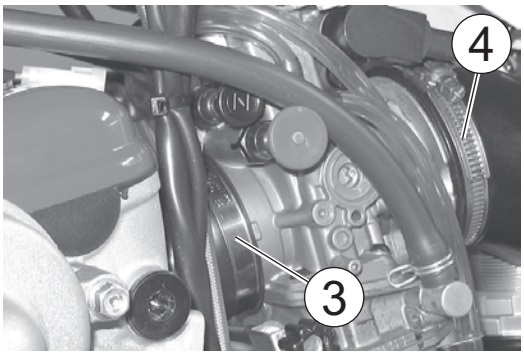

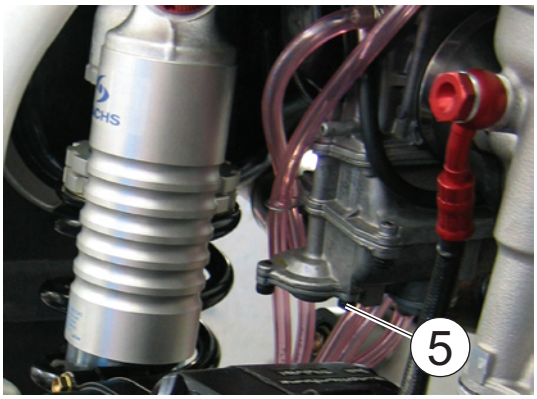

4) TE-SMR: loosen the left clamp (1) of the sleeve on the throttle body and the front clamp (2) on the cylinder head. Disconnect the connector from the M.A.Q.S. (6) on the throttle body of the main cable. Remove the throttle body (7); when reassembly the throttle body, adjust the T.P.S. again (see chapter S).

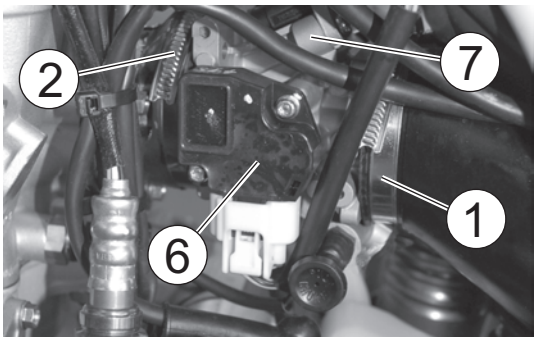

Remove the fastening pin (8) and the rear brake pedal.

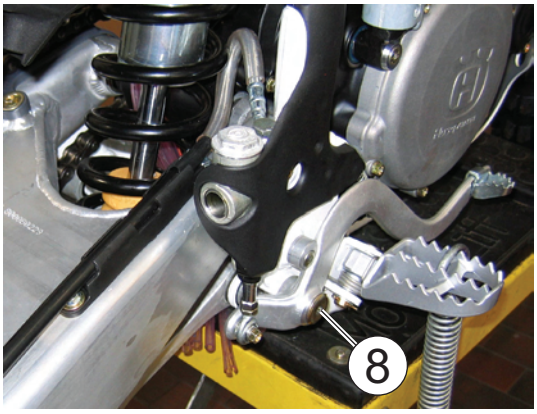

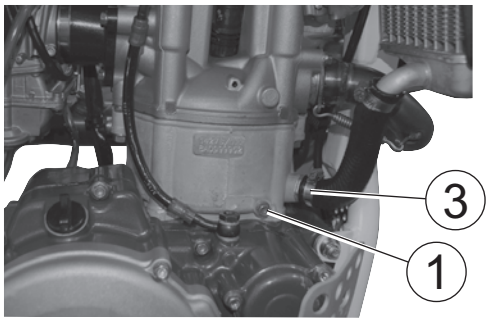

5) Place a vessel on the right side of the motorcycle, under the coolant draining screw (1). Using a 8 mm wrench, FIRST remove the screw (1) then SLOWLY open the R.H. radiator cap (2); slope the motorcycle on the right side to drain the coolant easily in the vessel. Loosen lower clamps (3) of the hoses that connect the radiators to the engine. Loosen the clamp (4) of the upper hose that connects the L.H. radiator to the water pump.

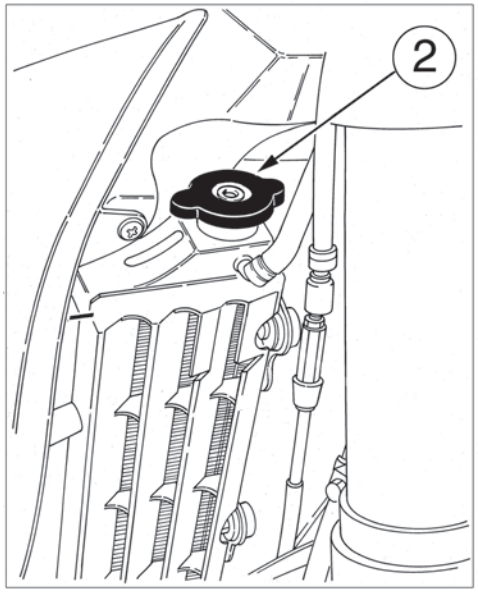

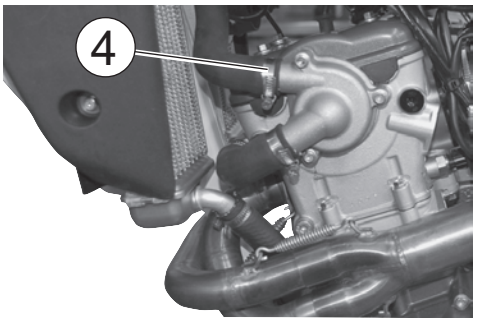

6) Even if not essential, it is advisable to remove the engine lower guard (A) then place a vessel under the engine and remove the oil filler cap (1); using a 8 mm Allen wrench, remove the oil draining plug (2) and eliminate the used oil; on the L.H. side of the engine, using a 8 mm wrench, remove the rear filter cover screws (3) and extract the steel filter (4) and the net filter (5).
Still operating on the L.H. side of the engine, using a 6 mm Allen wrench, unscrew the plug (6) then remove the net filter (7) and the O-Ring; on the R.H. side of the engine, unscrew the three fastening screws (8) and remove the cover and the filter cartridge (9).

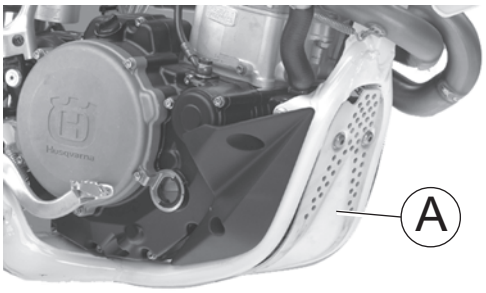

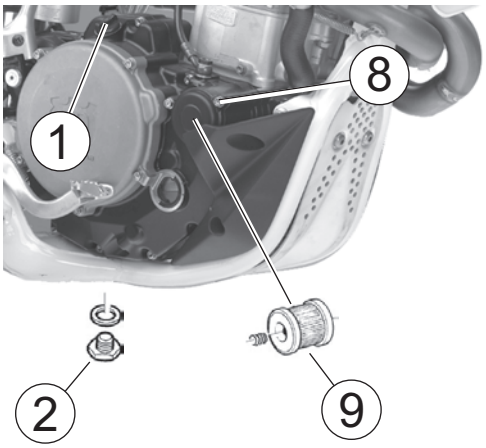

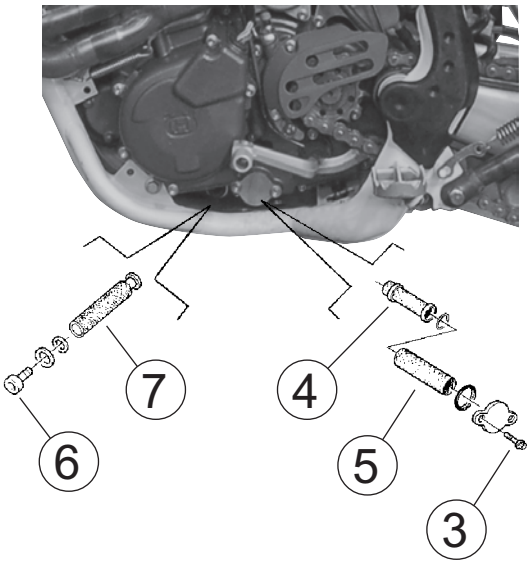

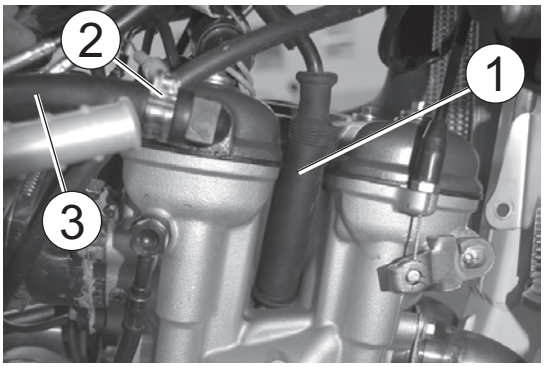

7) Remove the cap (1) from the spark plug. Remove the clamp (2) and detach the hose (3) from the cylinder head cover. On the L.H. side, using a 6 mm wrench, remove the rear transmission sprocket cover screws (4) and, using a 6 mm Allen wrench, remove the screws (5) that fasten guide-chain plate.
Using a 8 mm wrench, remove the three screws (6) that fasten the clutch control on the engine and eliminate the remaining fluid from the hose.
TE-SMR-TXC: detach the electrical connections from the starting motor [use a 8 mm wrench to remove the ground cable (8) and a 10 mm wrench to remove the nut under the rubber cap (9)].
Remove the clutch hose-alternator cable connecting clamps (10). Detach the alternator connector (11) (alternator cable-main wiring harness).

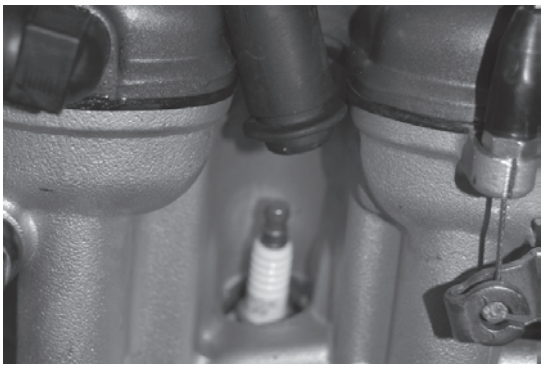

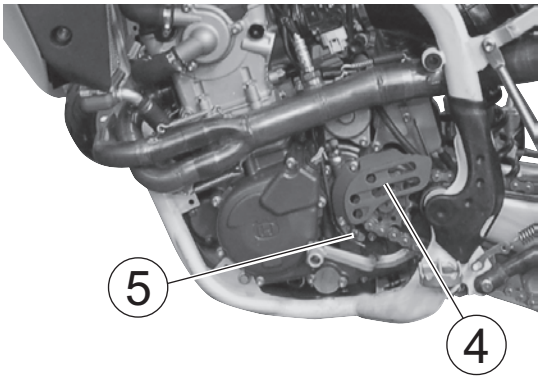

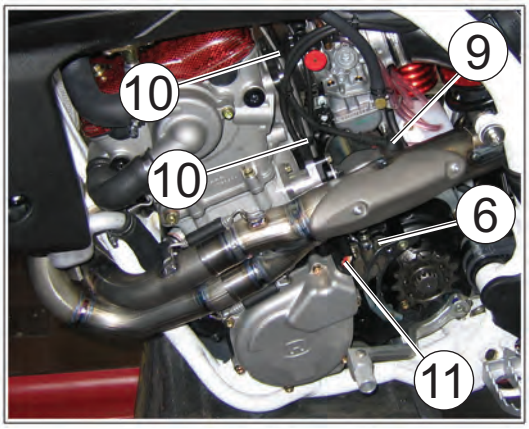

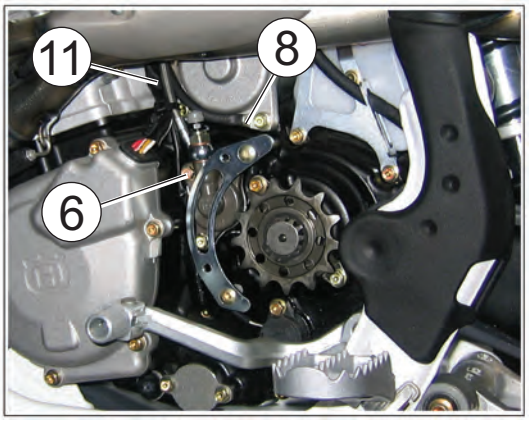

8) TE-SMR: disconnect the cooling fan (1) from the main wiring harness.
Detach the thermoswitch (2) from the main wiring harness.
Remove the two screws (3) and the coolant expansion tank (4).

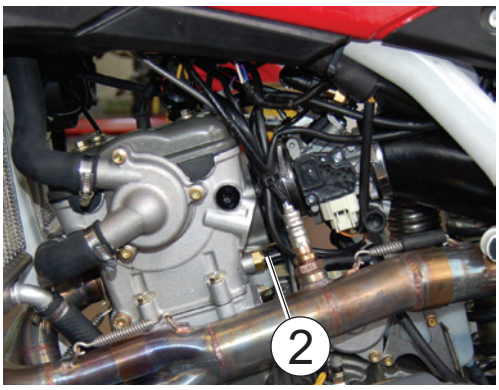

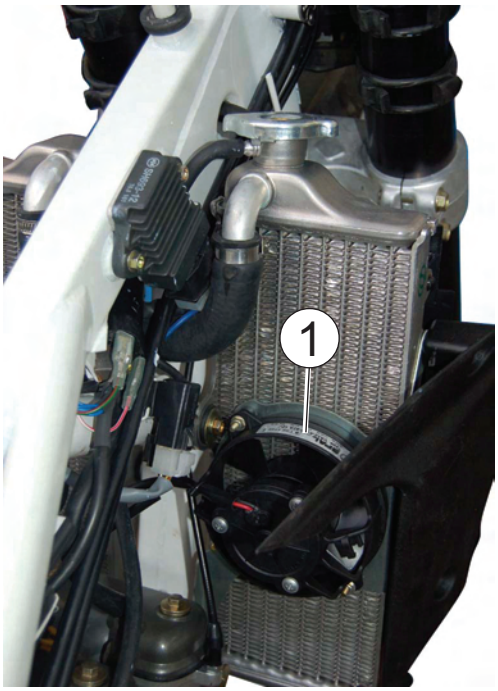

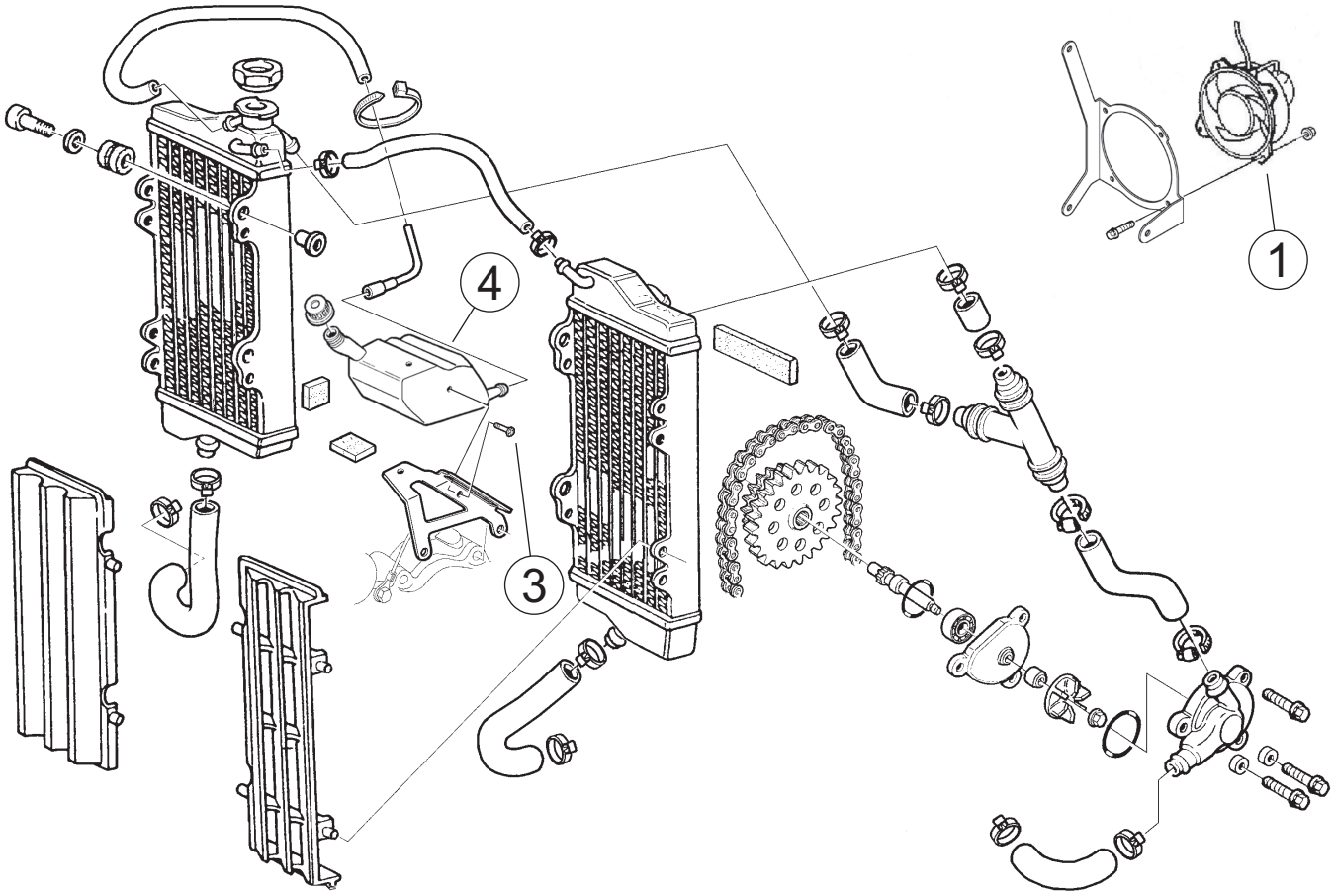

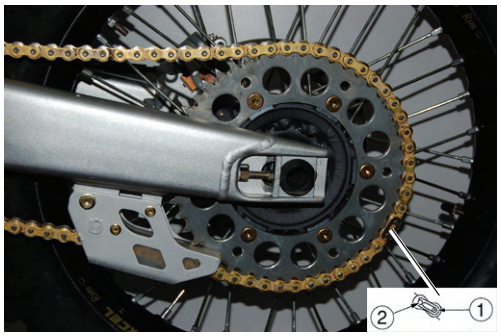

9) For the rear chain disassembling (both of the chain type without O-Rings that with rings O-Rings), remove the clip (1), the master link (2) then the chain.
Using a 12 mm wrench on the L.H. side and a 10 mm wrench on the R.H. side, remove the side protections (A) and (B) and then unscrew the fastening bolts (3) (engine-frame).
Remove the upper clamp (5) of the shock absorber.
Remove the guards (4) by removing the clamp to the frame; use a 22 mm wrench on the left side, unscrew the nut from the fork pin, extract the axle from the R.H. side then pull back the rear swing arm in order to facilitate the engine disassembly from the frame.
Lift the engine, slope it on the L.H. side and remove it from the motorcycle.
Place the engine on a turning stand in order to operate as shown on chapters F-G-H.

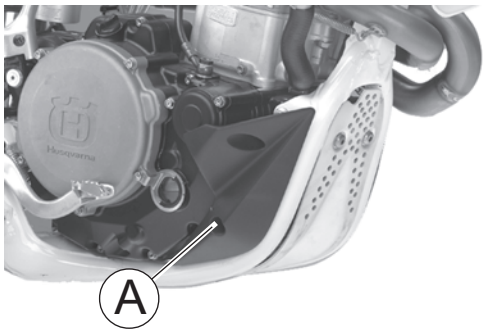

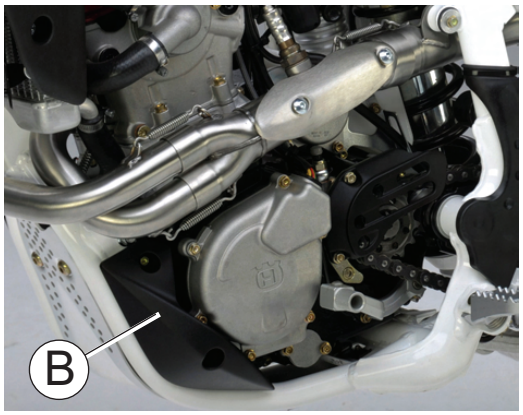

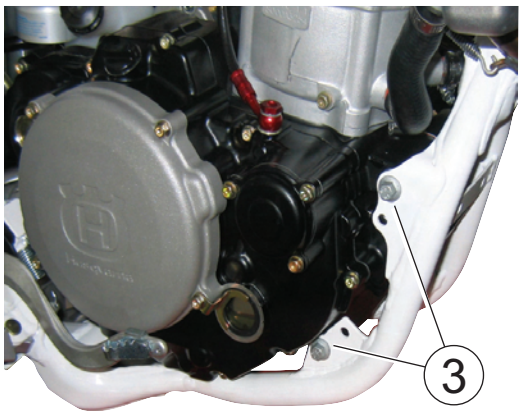

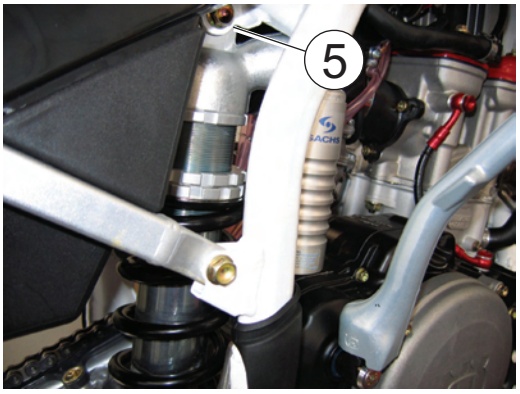

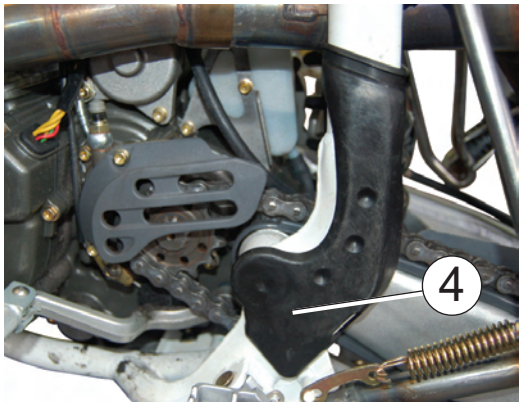

Removal of saddle and battery

Turn counterclockwise the rear fastening pin (1) and remove the saddle.
TE-SMR-TXC: First remove the BLACK negative cable, then the RED positive cable (when reassembling, first connect the RED positive cable and then the BLACK negative cable); remove the battery (3) from its housing.
TXC: After battery removal, push ONCE THE ENGINE START BUTTON in order to discharge the condenser (4) fastened near the H.T. coil (5).

: After battery disassembly, DO NOT remove the condenser from the frame: in case of engine starting in this condition, the voltage regulator will be damaged.

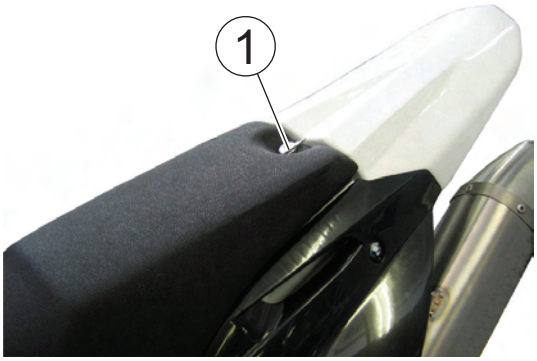

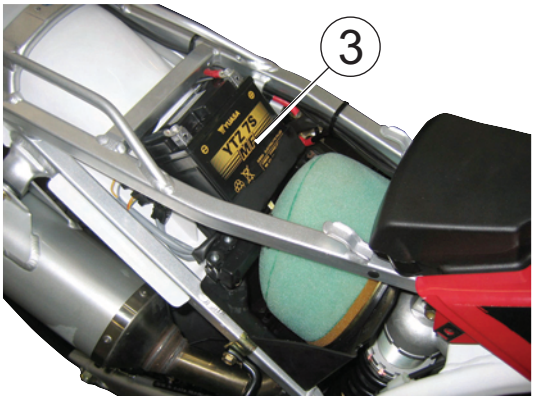

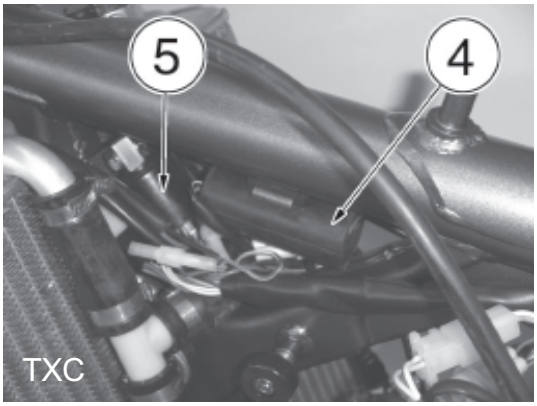

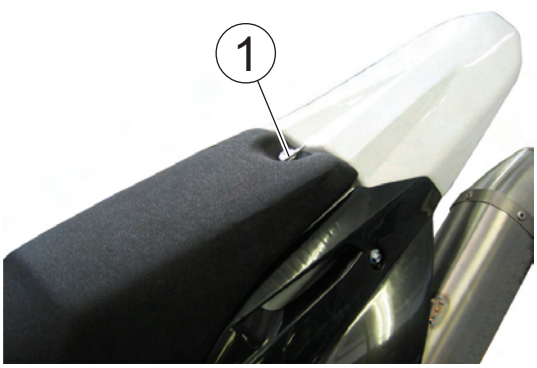

Removal of side panels
Turn rear pin (A) counterclockwise and remove the saddle from the front fastening screw. Loosen the screws (2) and remove the side panels (3) and (4).

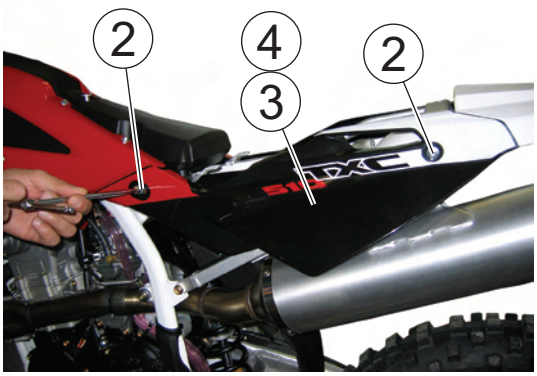

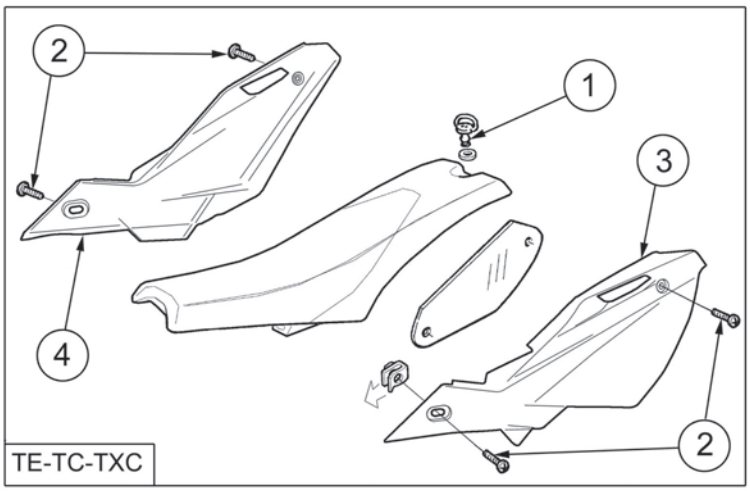

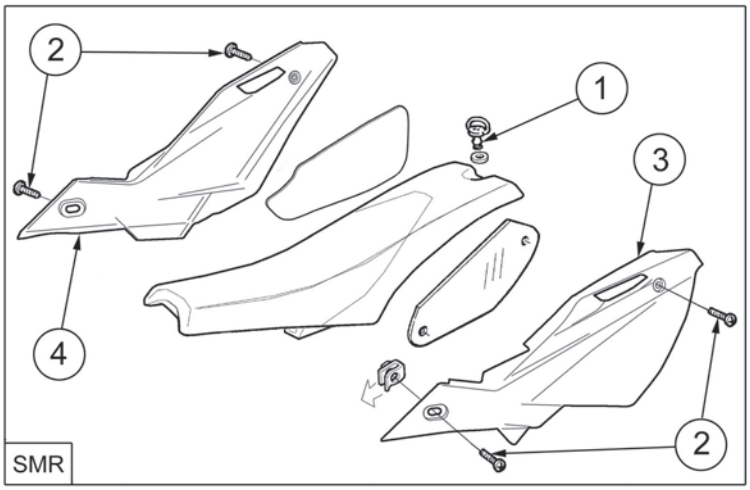

Removal of rear frame with fender (TE- SMR: with tail light) and air filter box assy.
Remove the saddle and disconnect the battery (A) from the electric system as shown on page E.14.
Remove the side panels as shown on page E.15.
Remove the fuel tank as shown on page E.23.

TE-TC-TXC-SMR: use an 8 mm T-wrench and a 10 mm T-wrench inside to remove the fastening screw (1) of silencers (4). Remove the spring (2) and use an 8 mm T-wrench to remove also the screw (3); then extract the silencer (4).

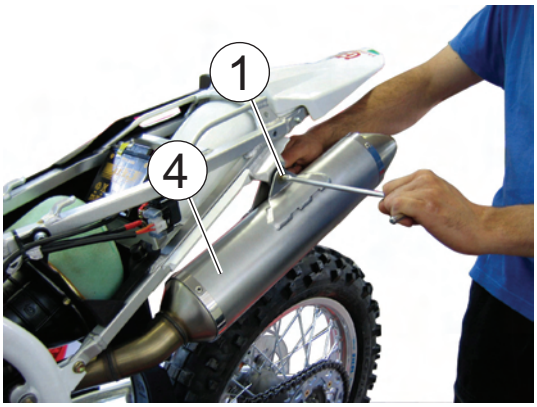

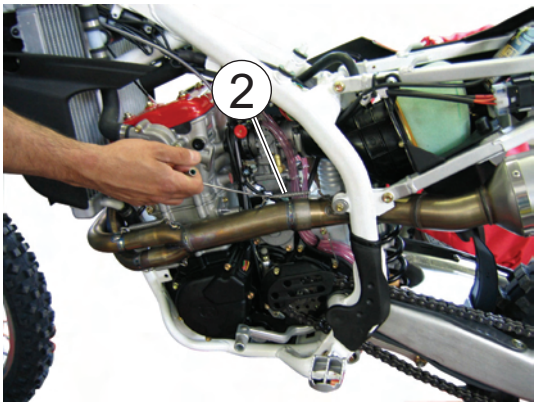

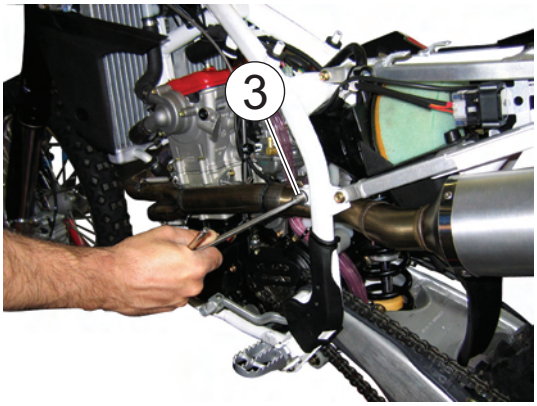

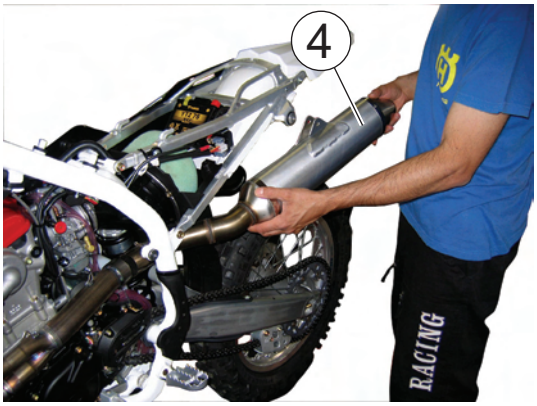

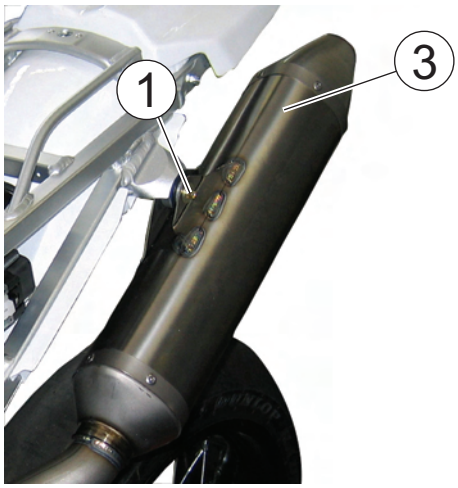

SMR: use an 8 mm T-wrench and a 10 mm T-wrench inside to remove the fastening screw (1) of silencers (3) and (4). Remove the spring (2) and extract silencers (3) and (4).

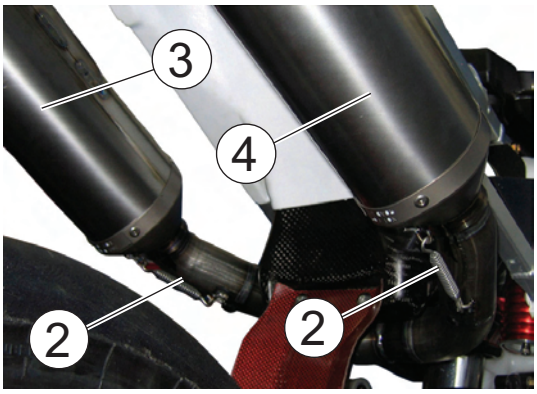

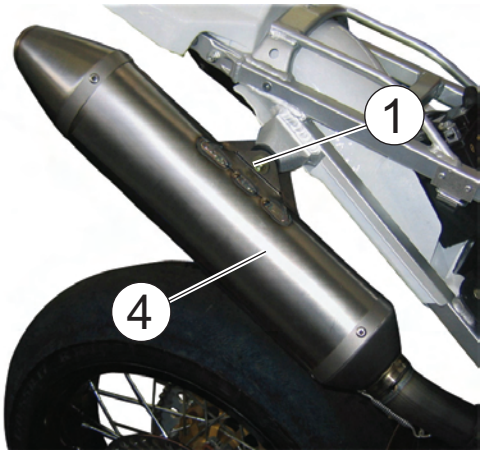

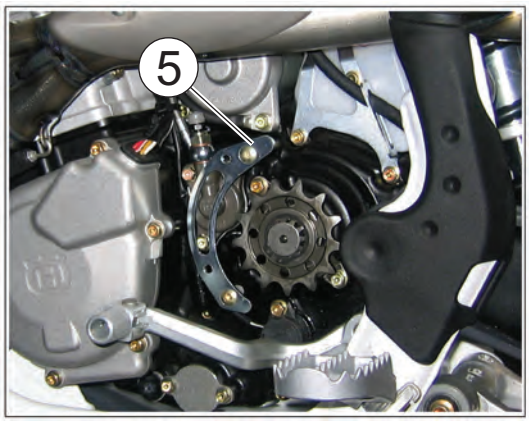

On the left side disconnect the electric connections from the starting motor [use an 8 mm wrench to remove the earth cable (5) and a 10 mm wrench for the nut under the rubber cap (6)], remove the clamps (A) that hold the clutch pipe and the alternator cable.

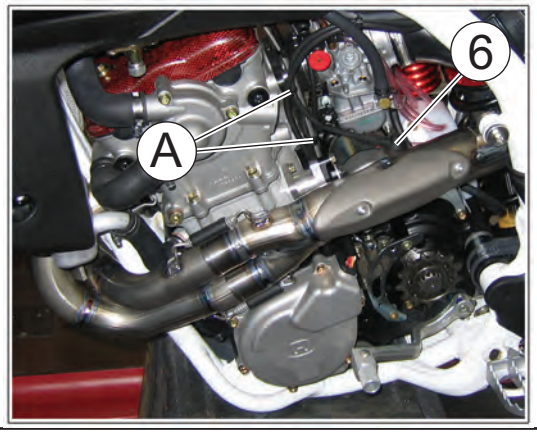

On the right side, remove the clamp (B) from the vent pipe from the filter box; remove the pipe (C) from the cylinder head cover.
Disconnect the start remote control switch (7) and the connector of the rear light from the cabling system (TE-SMR).
Without disconnecting them from the cabling system, remove the voltage regulator (9), the electronic CDI central unit (8) with the elastic support of the frame.
Loosen the clamp (10) that holds the rubber fitting from the filter box on the carburettor or on the throttle body.

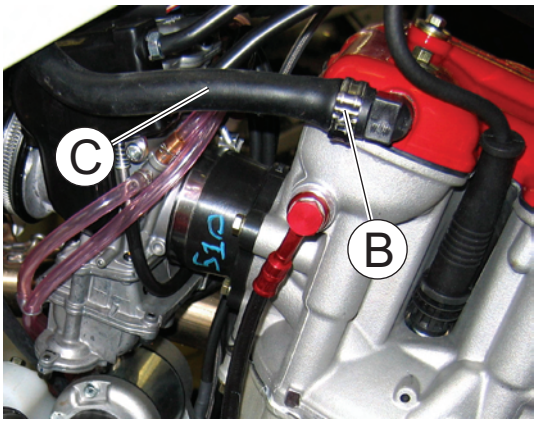

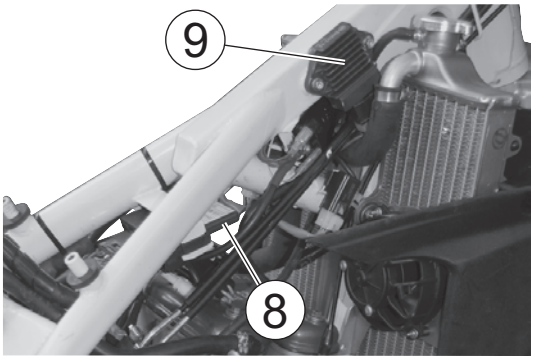

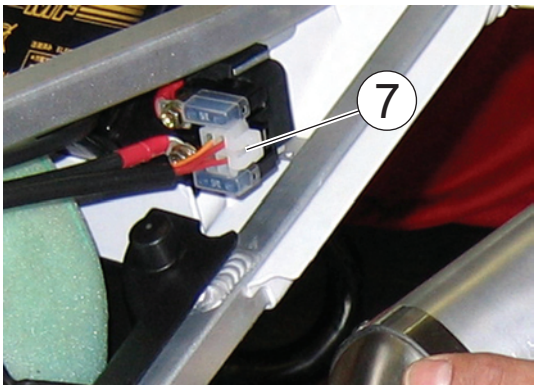

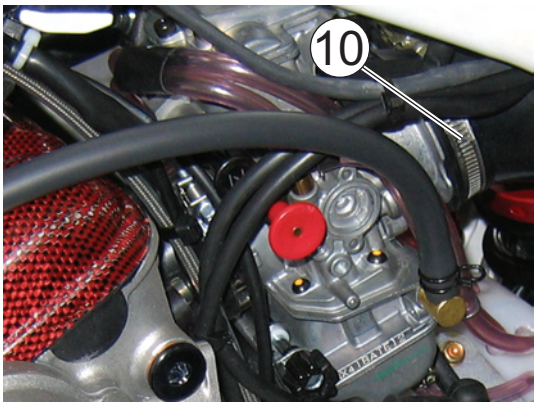

Use a 12 mm box wrench to remove the upper (11) and lower (12) fasteners from the rear frame.
Pull the rear frame back, along with the mudguard and the air filter box, and remove it from the main frame.

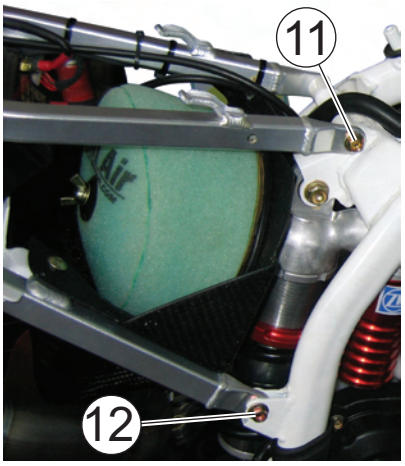

Removal of exhaust system
Remove the saddle as shown on page E.15.
Remove the R.H. side panel (TE-TC-TXC) or both the side panels (SMR) as shown on page E.16.

TE-TC-TXC

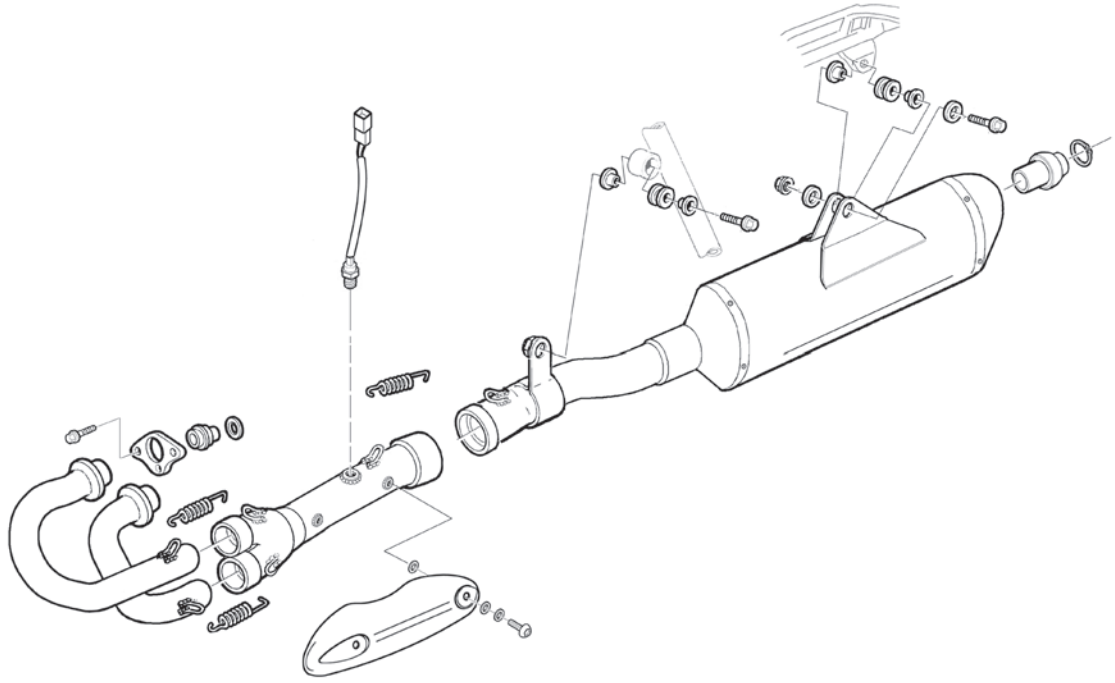

SMR

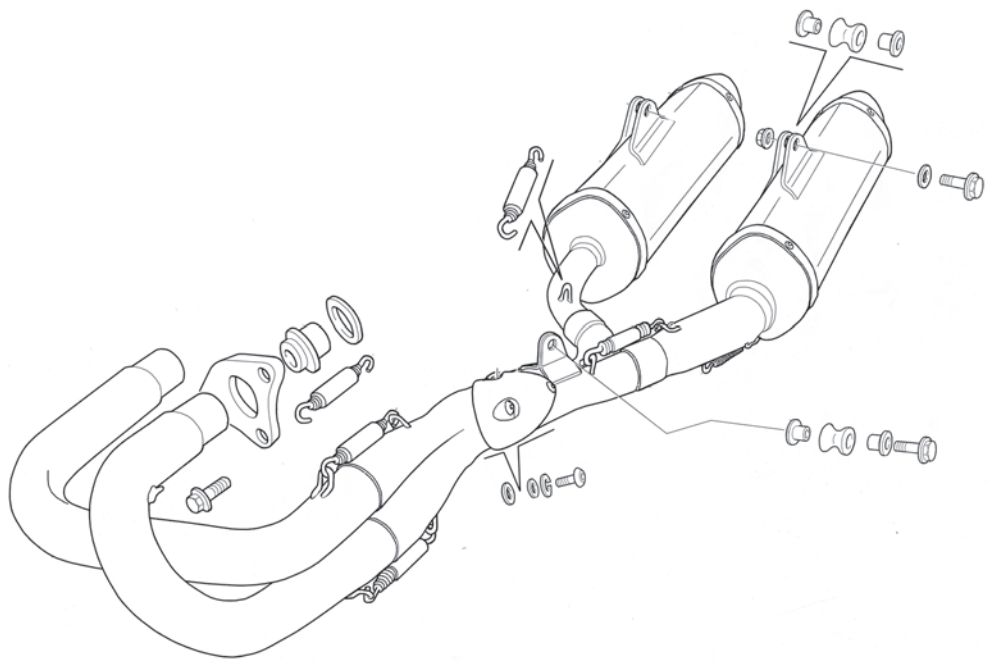

TE, TC, TXC: use an 8 mm T-wrench outside and a 10 mm T-wrench inside to remove the fastening screw (1) of silencer (4). Remove the spring (2) and use an 8 mm T-wrench to remove also the screw (3); then extract the silencer (4).

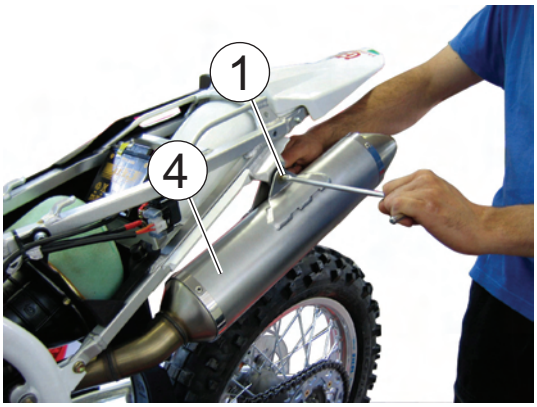

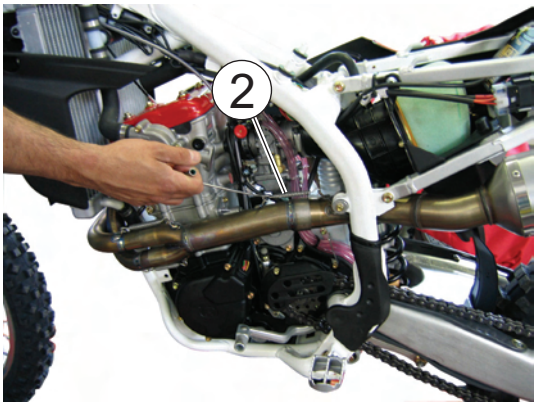

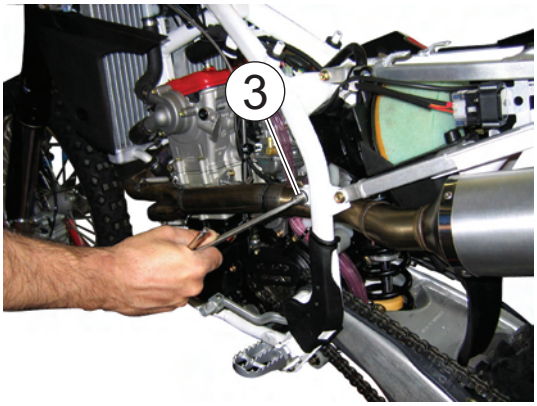

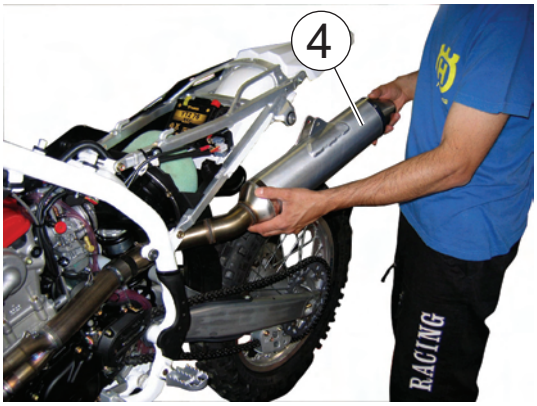

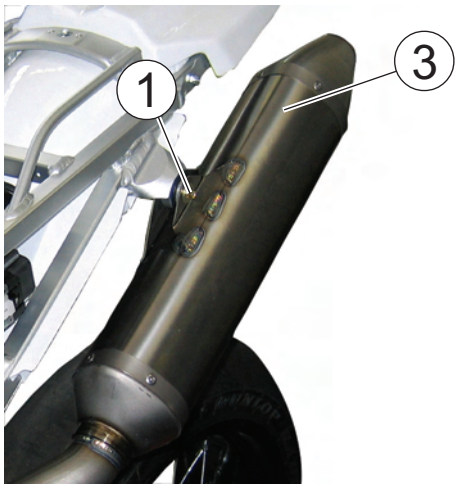

3) SMR: use an 8 mm T-wrench outside and a 10 mm T-wrench inside to remove the fastening screw (1) of silencers (3) and (4). Remove the spring (2) and extract silencers (3) and (4). Remove the clamps (A) that the hold front pipes (6) and (7) to the intermediate pipe (8).

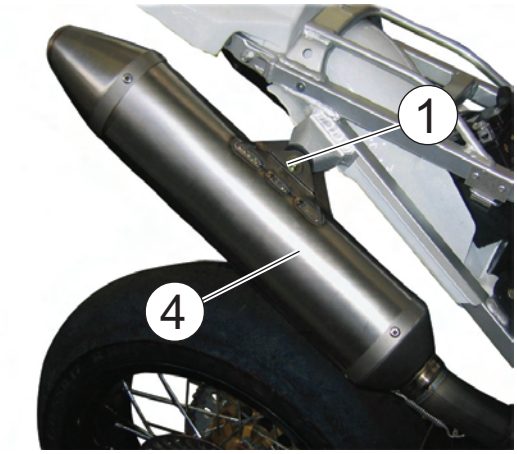

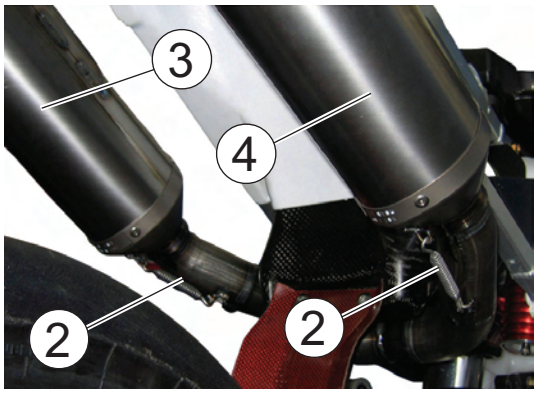

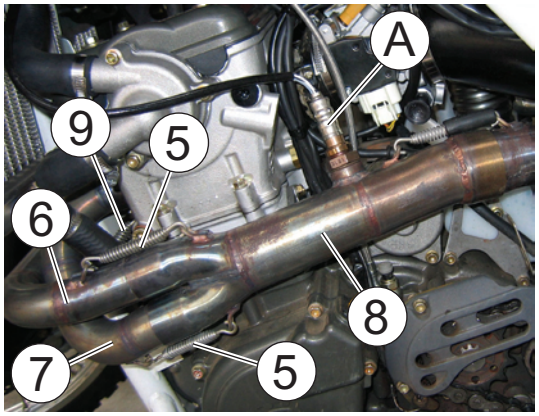

3) TE-SMR: remove the LAMBDA probe (A). Remove the intermediate pipe (8). Remove the springs (9) and remove pipes (6) and (7) from the cylinder head by gently hitting outward.

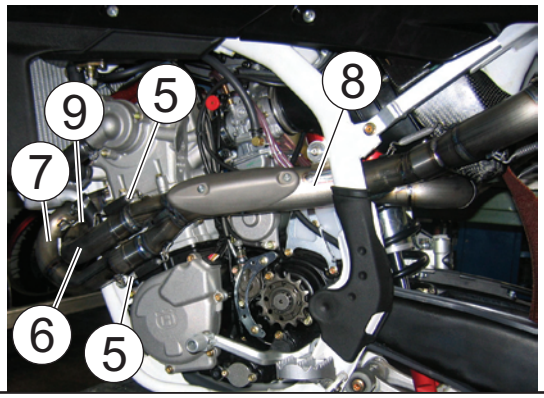

Removal of fuel tank, conveyors and spoiler
Remove the saddle as described on page E.15.

TC-TXC
Remove the vent pipe (1) from the steering pin. Turn the ring nut of the fuel tap (2) anticlockwise to stop fuel flowing and loosen the clamp (3) on the carburettor fuel pipe; remove this pipe from the carburettor and pour the remaining fuel into a container.
Loosen the fastening screws (6) of the fuel tank. Remove the screws (4) holding conveyors to the tank; remove the conveyors (7), the screws (5) holding spoilers (8) to radiators. Remove the spoilers and extract the tank.

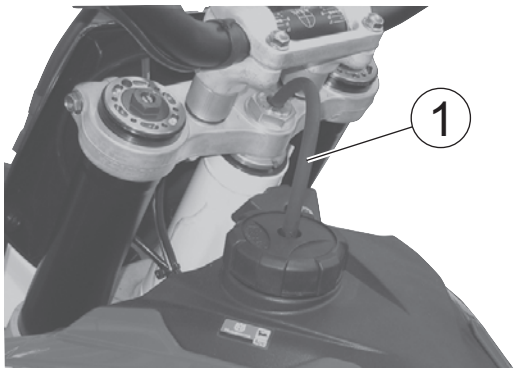

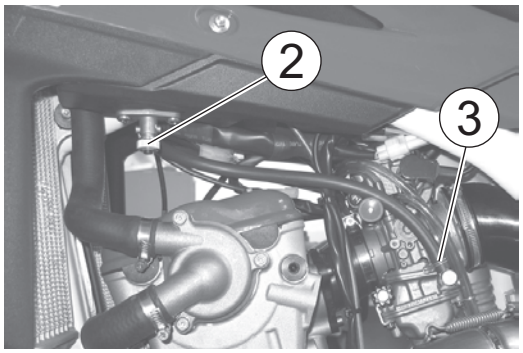

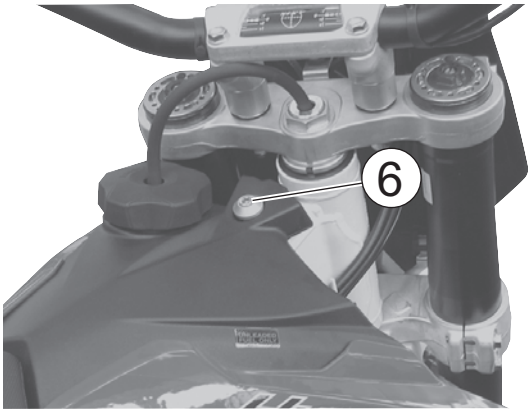

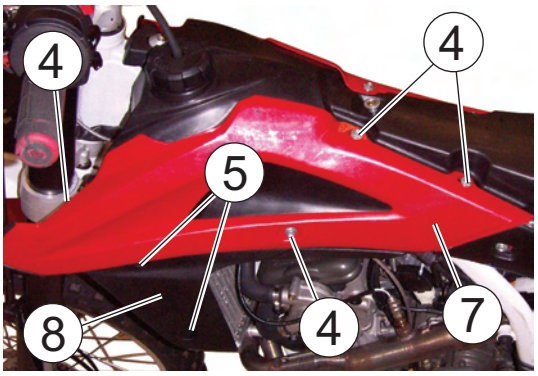

TE-SMR
Remove the vent pipe (1) from the fuel tank cap. Unscrew the fastening screw (6) of the fuel tank. Remove the screws (4) holding the conveyors to the tank; remove the conveyors (7), the screws (5) holding spoilers (8) to radiators. Remove the spoilers. Disconnect the connector of the fuel pump from the main cable. Disconnect the feed line (B) from the outlet fitting (C) on the fuel pump on the lower rear part of the tank the feed line. Extract the tank.

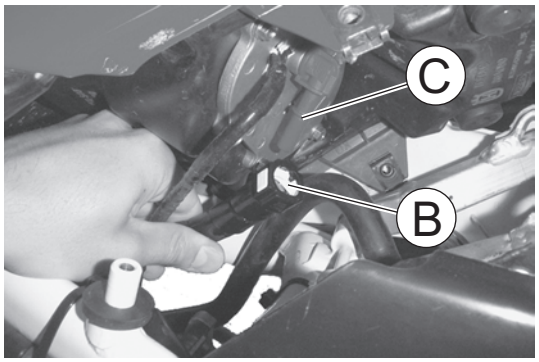

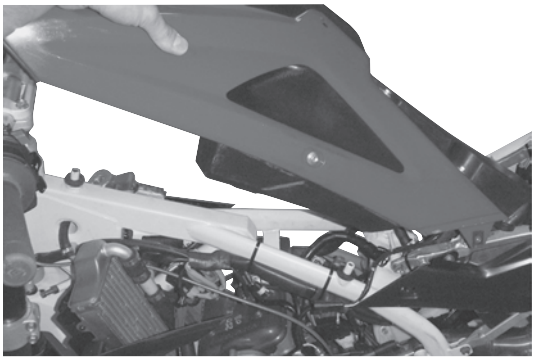

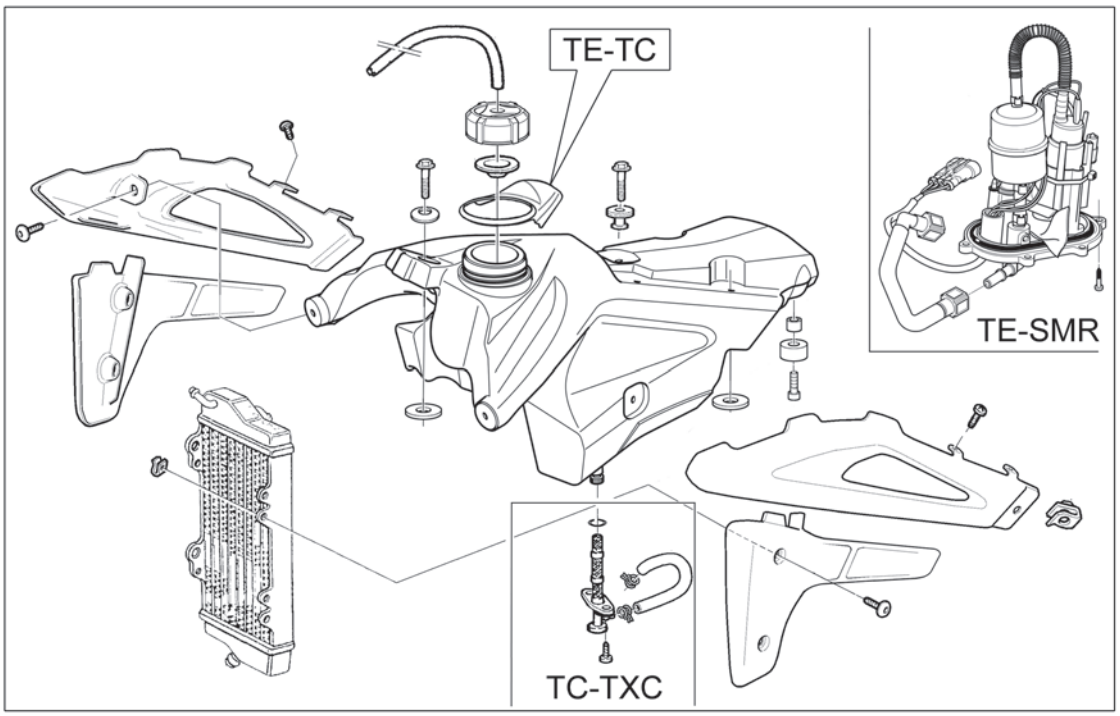

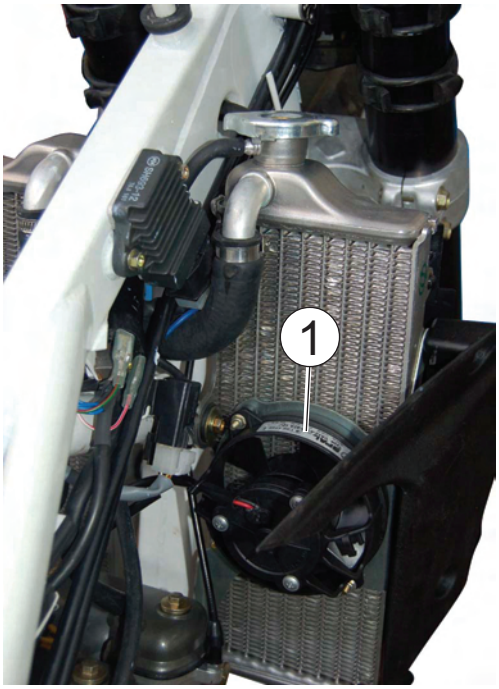

Removal of cooling fan (TE-SMR), radiators and coolant expansion tank (TE-SMR)

TE-SMR: disconnect the cooling fan (1) from the main wiring harness; remove the fan from its holding plate. Detach the thermoswitch (2) from the main wiring harness.

Remove the grid (3), detach the breather hose (4), the other hoses (A) from the radiators, remove the three screws (5) and the R.H. radiator. Repeat the same operations to remove the L.H. radiator:

TE-SMR: remove the two screws (6) and the coolant expansion tank (7).

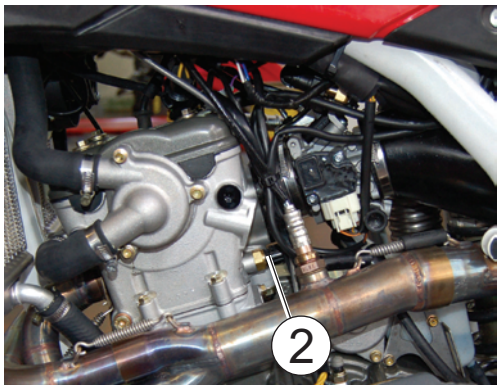

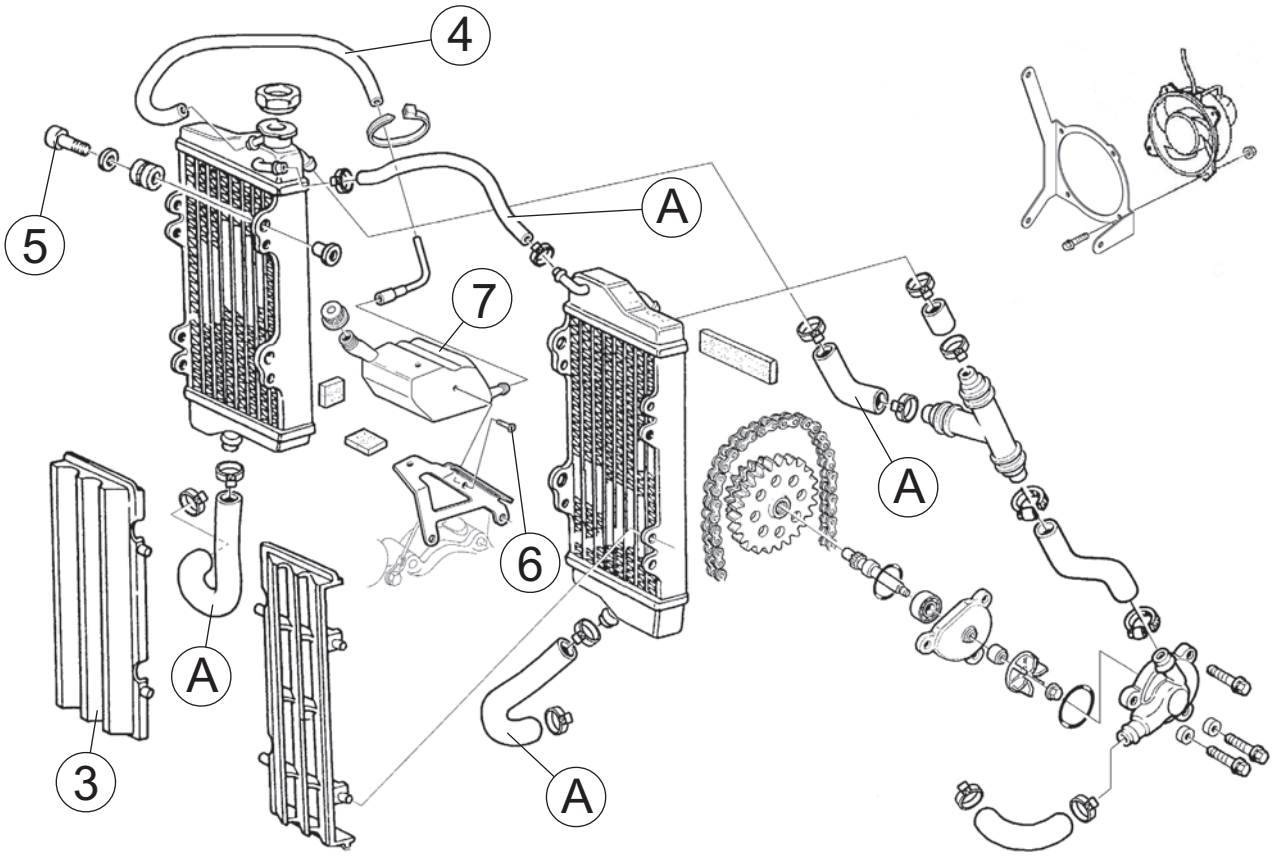

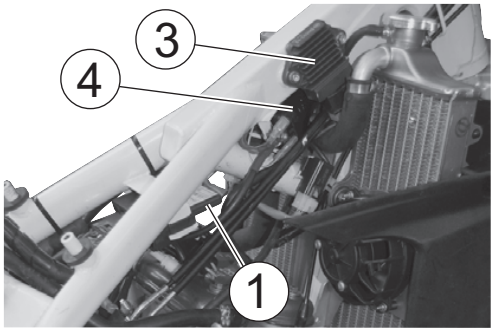

Removal of electronic power unit CDI, ignition coil, voltage regulator and clutch hose

Remove: saddle, battery, side panels and fuel tank as shown on pages E.15, E.16, E.23.

Remove the connector from electronic power unit CDI (1) and the electronic power unit complete with elastic holder from the frame. Remove the cap (2) from the spark plug. Detach the voltage regulator electrical (3) connection from the main wiring harness, the screw and voltage regulator.

Remove the fastening screw and the ignition coil (4).

Unscrew the clutch hose union (5) on the L.H. side of the engine. Drain the fluid from the hose. When reassembling, bleed the clutch system as shown on page P.7.

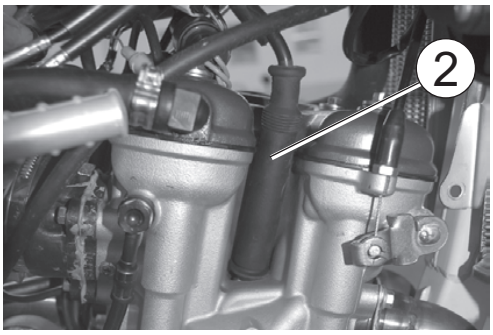

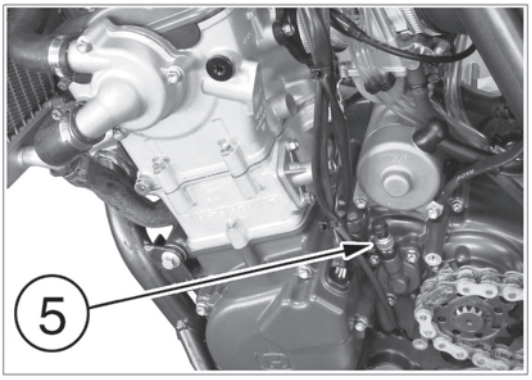

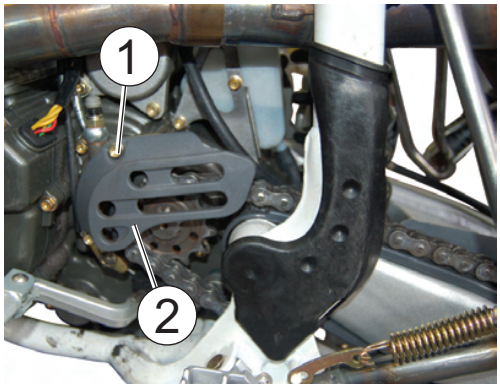

Removal of secondary drive chain

To remove the transmission chain (without O-Rings type and with O-Rings type), proceed as follows:

Remove: screws (1), transmission sprocket guard (2), clip (3), master link (4) and transmission chain (5).

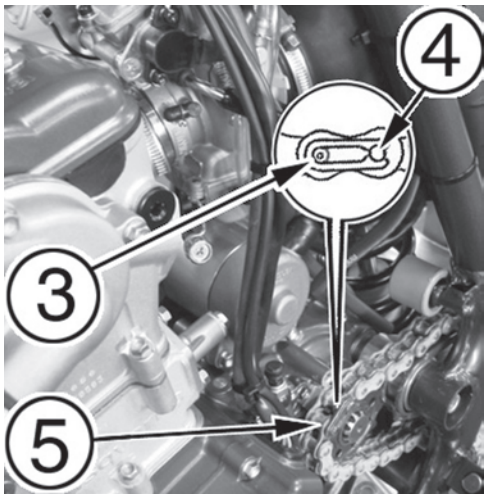

Section F

Cylinder head cover disassembly F.4
Camshaft disassembly F.4
Water pump body disassembly F.6
Cylinder head disassembly F.7
Valve disassembly F.8
Cylinder disassembly F.10
Piston disassembly F.10
Flywheel disassembly F.11
Kick start pedal disassembly (TC, TE, TXC)..... F.12
Transmission cover disassembly F.13
Clutch disassembly (TC, TE, TXC; SMR 450-510) F.13
Kick start components disassembly (TC, TE, TXC) ... F.15
Electric starting system disassembly
(TE, TXC; SMR 450-510) F.16
Oil pump disassembly F.17
Gear control pedal and gear shifter disassembly F.18
Primary transmission driving gear disassembly F.20
Crankcase disassembly F.21
Gearbox disassembly F.22
Crankshaft and counter balancing shaft
disassembly (SMR 450-510) F.24

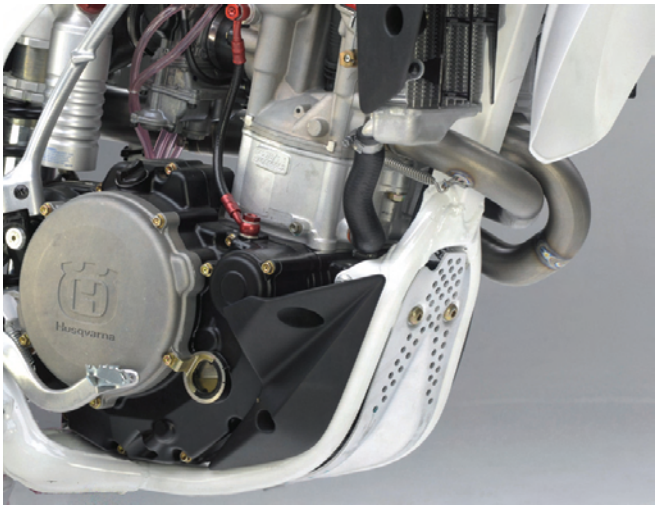
Husqvarna

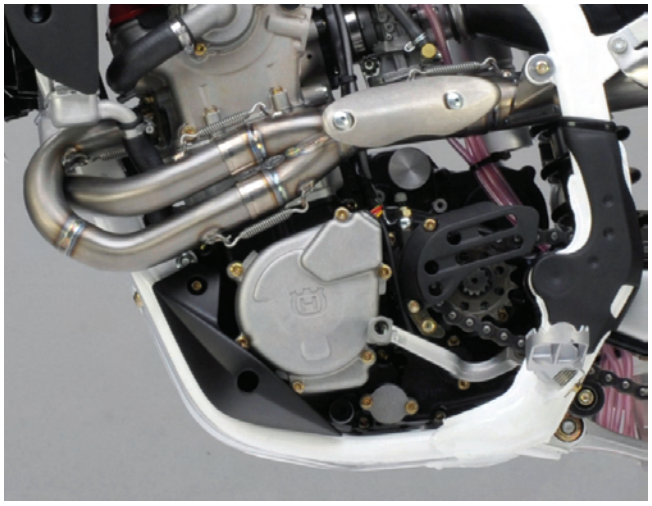

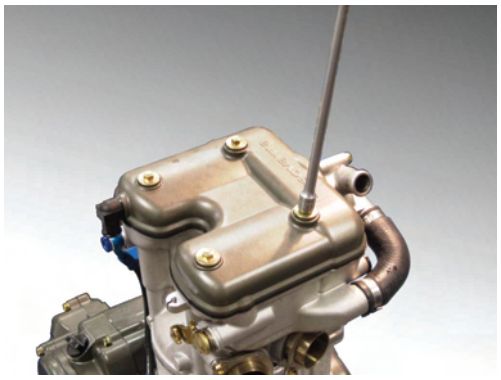

Cylinder head cover disassembly
Remove the four fastening screws (8 mm wrench) and the cylinder head cover together with the relative gasket.

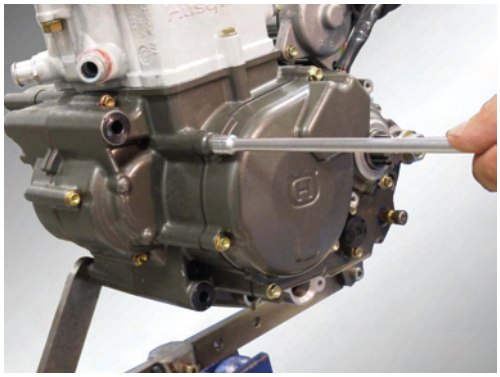

Camshaft disassembly
Remove the six fastening screws (8 mm wrench) and the alternator cover. Using a 17mm wrench, position the piston at T.D.C. at the end of the compression stroke (in this condition, the mark on the cylinder head is aligned with the two marks on the idle gear of the camshafts, as shown in the figure on page F.7). Remove the spark plug (16 mm wrench) and the lubrication hose from the cylinder head (13 mm wrench).

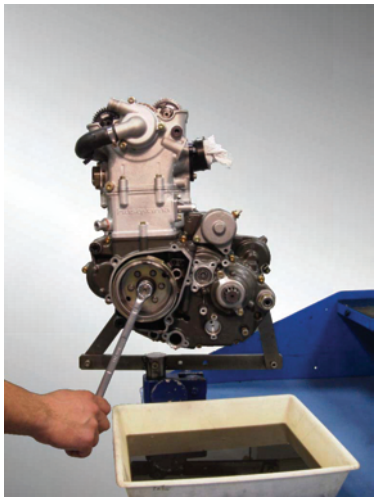

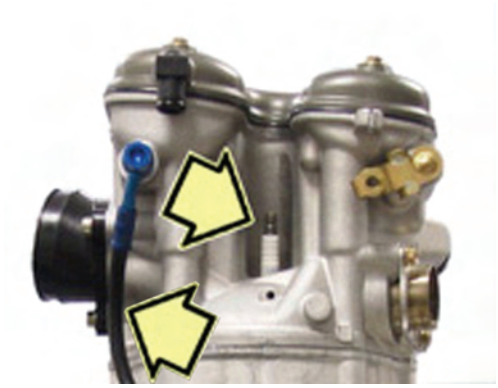

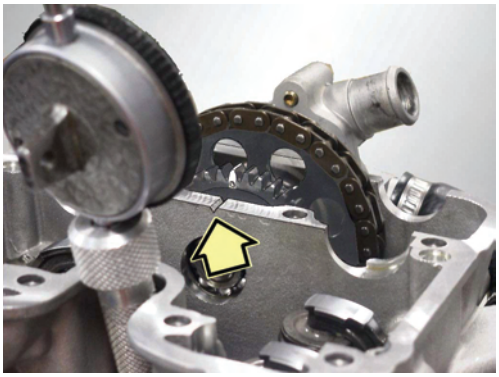

Loosen the cam-chain tensioner (10 mm wrench) then remove the two fastening screws (8 mm wrench) and the cam-chain tensioner assembly.
Remove the eight fastening screws of the camshaft clamps (5 mm wrench) and the clamps themselves using these same screws.
Remove the lubricating tube.
Remove the camshafts.

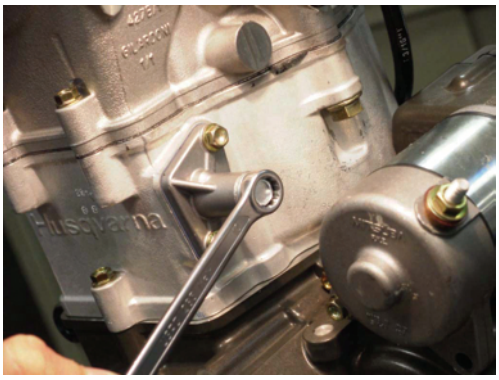

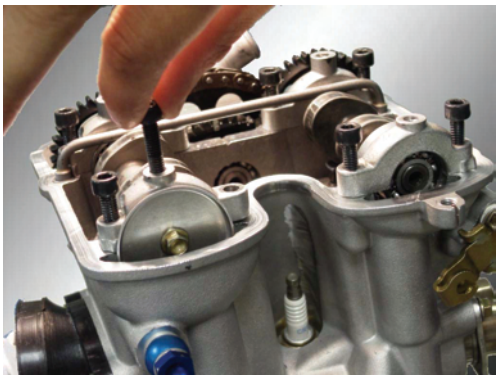

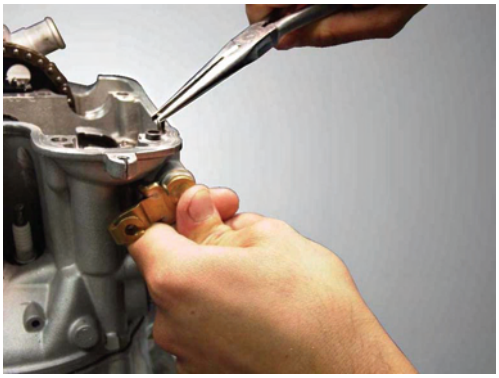

Remove the retaining pin and the valve lifter.

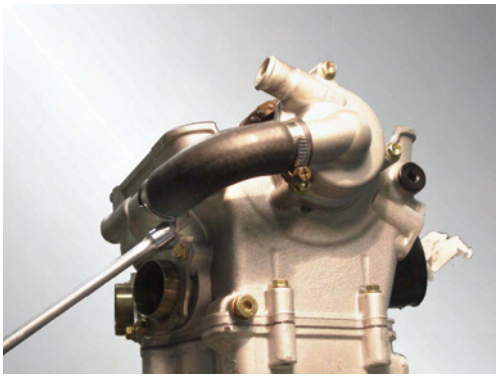

Water pump body disassembly
Loosen the hose water pump-cylinder head clamp and remove the hose from cylinder head. Remove the two fastening screws (8 mm wrench) and the water pump body from the cylinder head. Remove the timing driven gear (Water pump rotor fastening nut: 4,9 Nm/ 0,5 Kgm/ 3.6 ft/lb+LOCTITE 243).

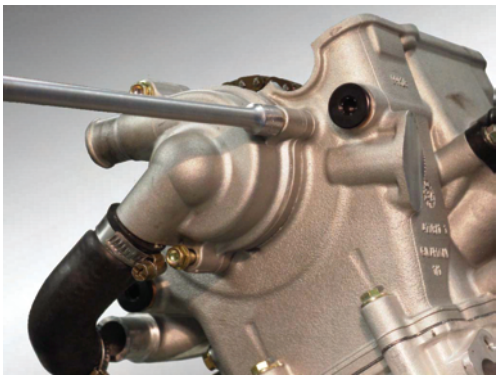

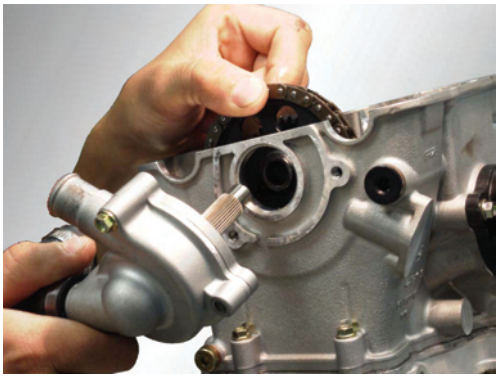

Cylinder head disassembly

TE-SMR: remove the coolant fluid temperature sensor with its O-ring.
Remove the two screws on the L.H.S (8 mm wrench) then the front nut under the cylinder head (13 mm wrench).
Remove the four inner screws on the cylinder head (10 mm wrench) whilst following a cross-over pattern.
Remove the cylinder head and relative gasket.

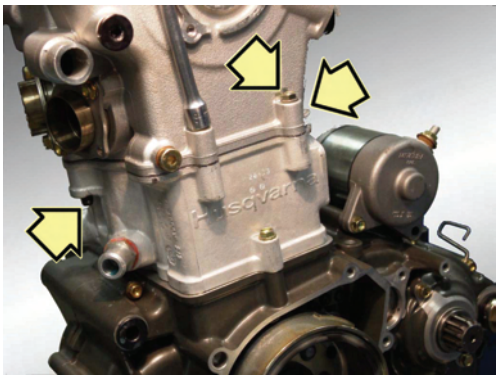

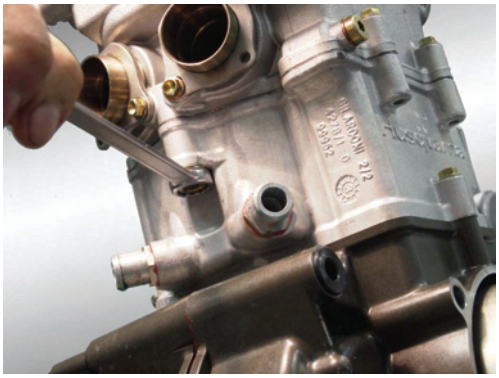

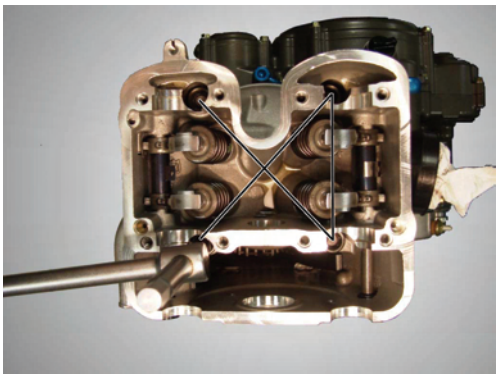

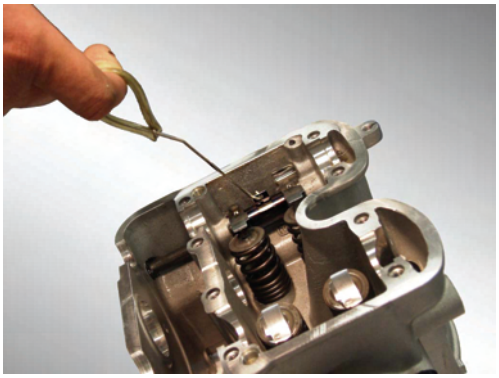

Valve disassembly
Using a hook, remove the rocker-arm spacer clip.
Remove the fastening screw (5 mm wrench) and the chain slider.
Remove the fastening screws (6 mm wrench) then the rocker-arm axles and the rocker-arms themselves.

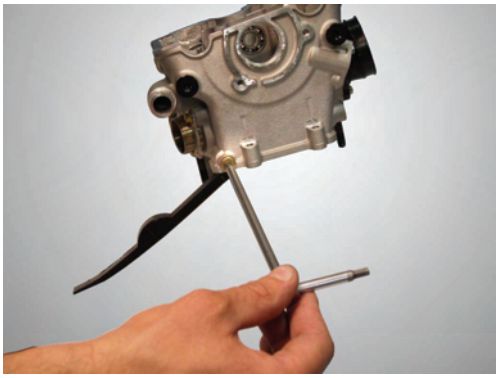

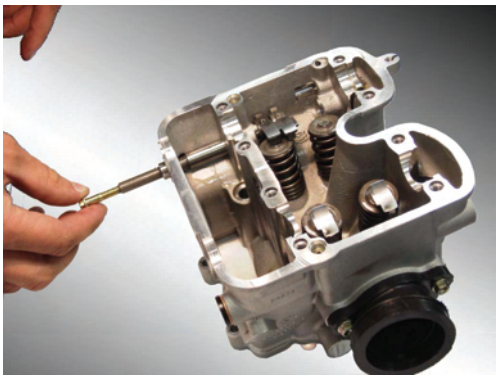

Using a tweezer, remove the valve adjusting pads.
Use a valve spring compressor tool to remove the valves. Be careful not to damage the gasket surfaces or the combustion chamber.
Make sure that the valve spring compressor is always straight, otherwise the valve stem can bend.
To prevent loss of tension, do not compress the valve springs more than necessary. Mark all parts, so that they can be reassembled correctly.
If the valve cotters have made a burr on the valve stem, remove it before removing the valve.
Remove the sealing gaskets from the valve guides.
Remember to replace the gaskets with new ones when reassembling.

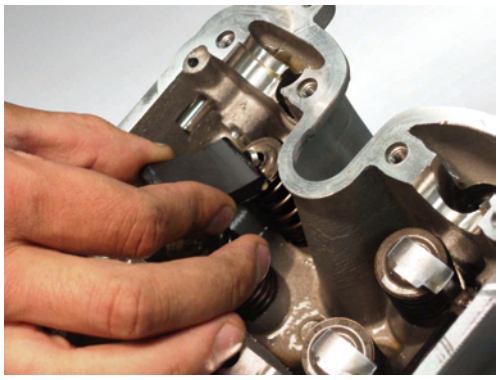

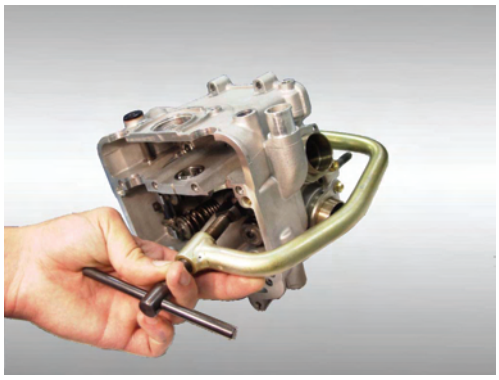

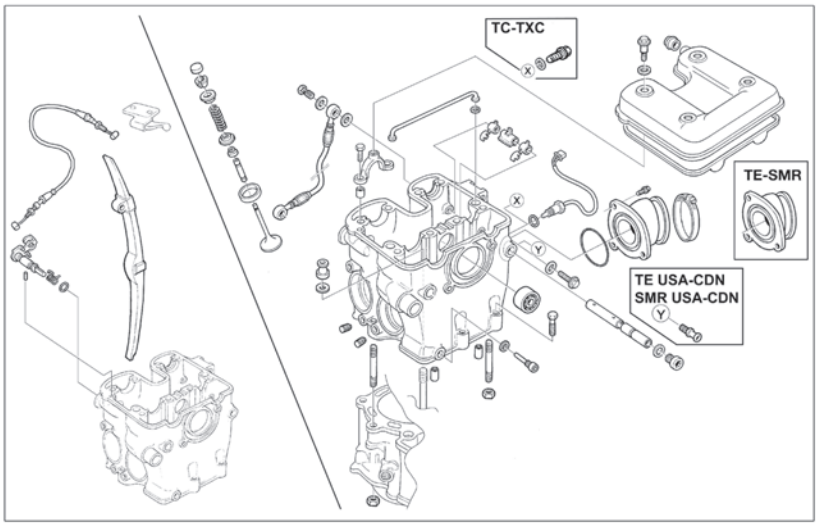

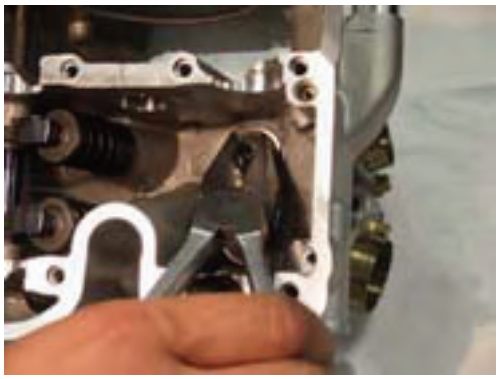

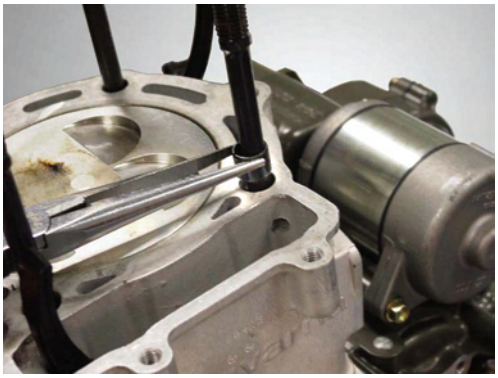

Cylinder disassembly
After having removed the cylinder head gasket, remove the two dowel bushings and the cylinder itself.

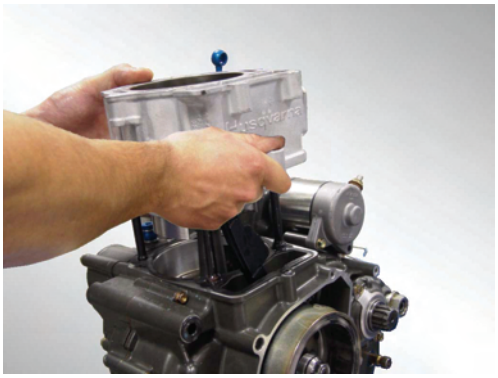

Piston disassembly
Remove the piston pin clips then the piston pin and the piston.

Flywheel disassembly
Maintain the rotor immobilized and remove the rotor nut (17 mm wrench). Remove the rotor using the puller (code no. 8000 A1559 for TC-TXC and 8000 B0144 for TE-SMR).

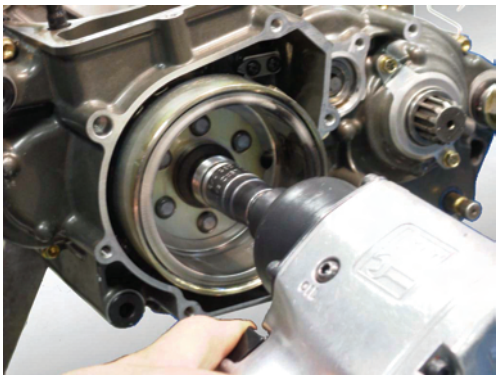

Remove the timing system chain.

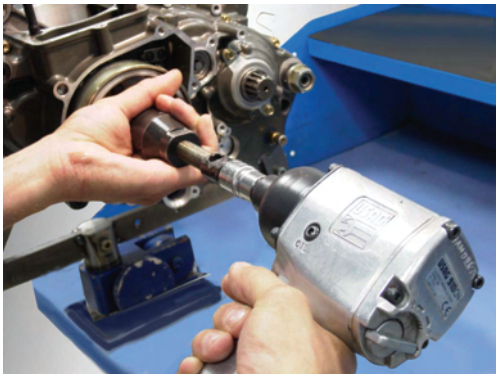

If the chain slider is worn, remove the fastening screw then the chain slider in order to replace it (Chain slider fastening screw 3 Nm/ 0,3 Kgm/ 2.1 ft/lb).

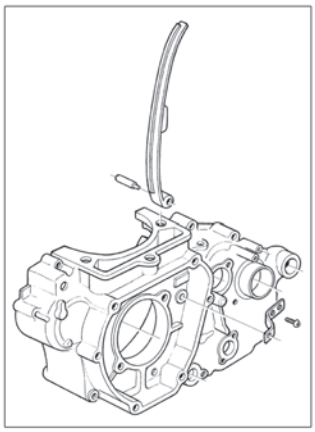

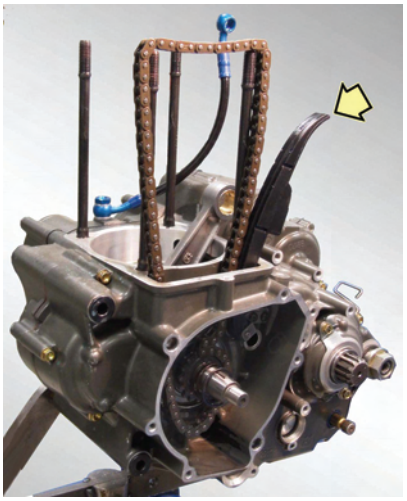

Remove the valve timing pinion using a puller.

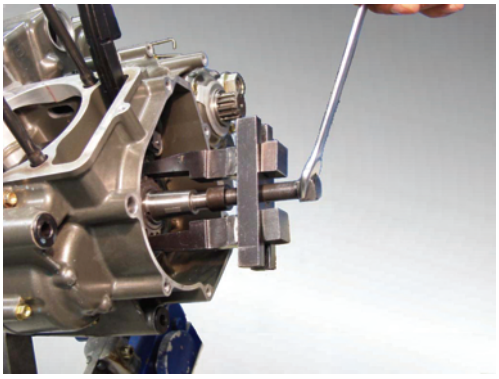

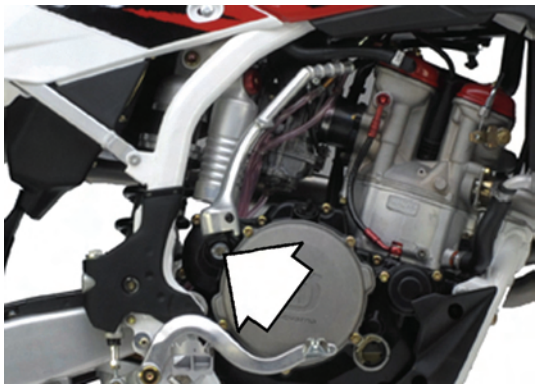

Kick start pedal disassembly (TC-TE-TXC)
Remove kick start pedal fastening screw (4 mm wrench), washer and kick start pedal.

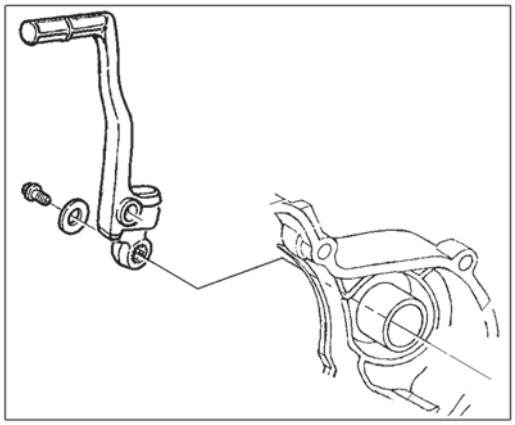

Transmission cover disassembly
Remove the twelve cover fastening screws (8 mm wrench) then the transmission cover. Remove gasket, dowel bushings and O-Rings.

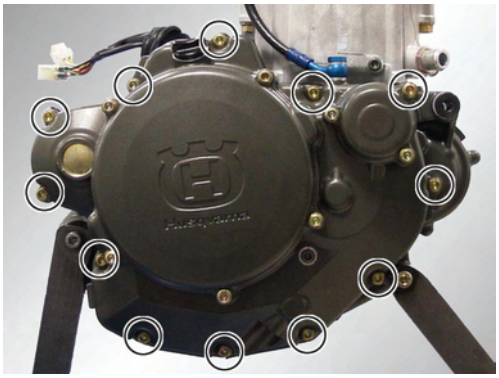

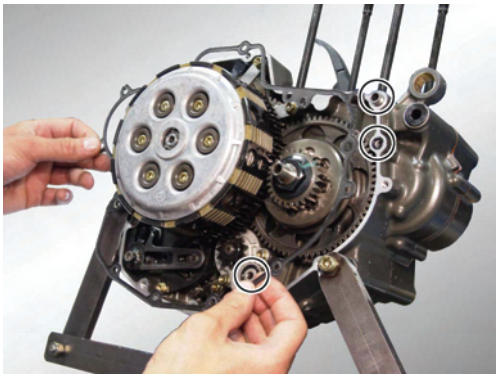

Clutch disassembly (TE-TXC-TC; SMR 450-510)
Remove the six screws (12) that fasten the springs (11) (5 mm wrench, whilst following a cross-over pattern and in steps). Remove the pressure plate (10) with the bearing and the clutch control cap (9). Remove clutch discs (8).

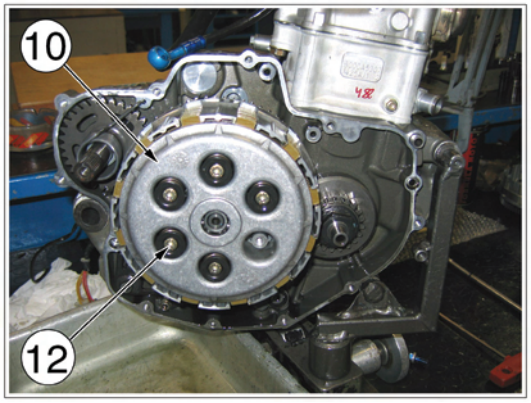

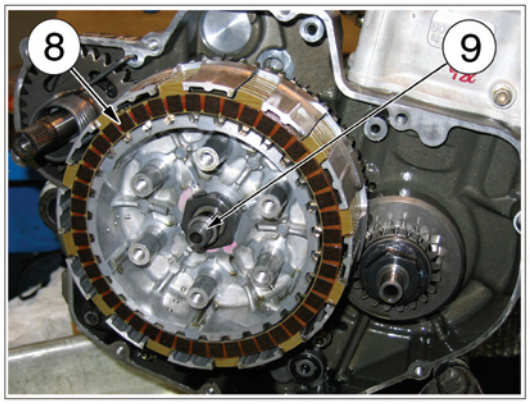

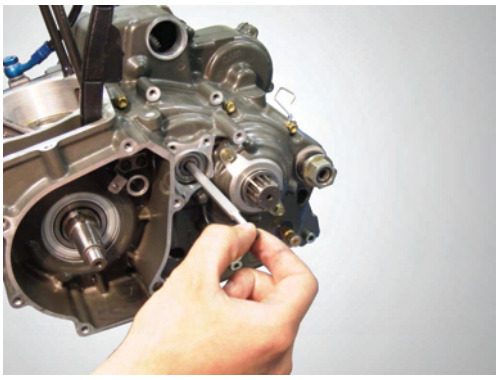

Remove the clutch control rod (13).
Bend back tabs of the hub washer (6) and holding the clutch hub nut (27 mm wrench), remove the nut (7) using the clutch disassembly tool (A) (code no. 8000 79015).
Remove the washer (6), the clutch hub (5), the grooved washer (4), the clutch housing (3), the bushing (2) and the washer (1).

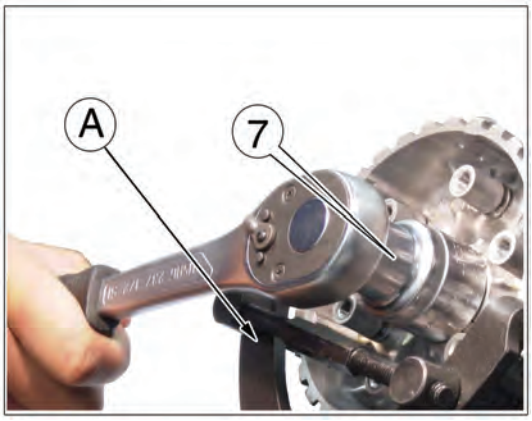

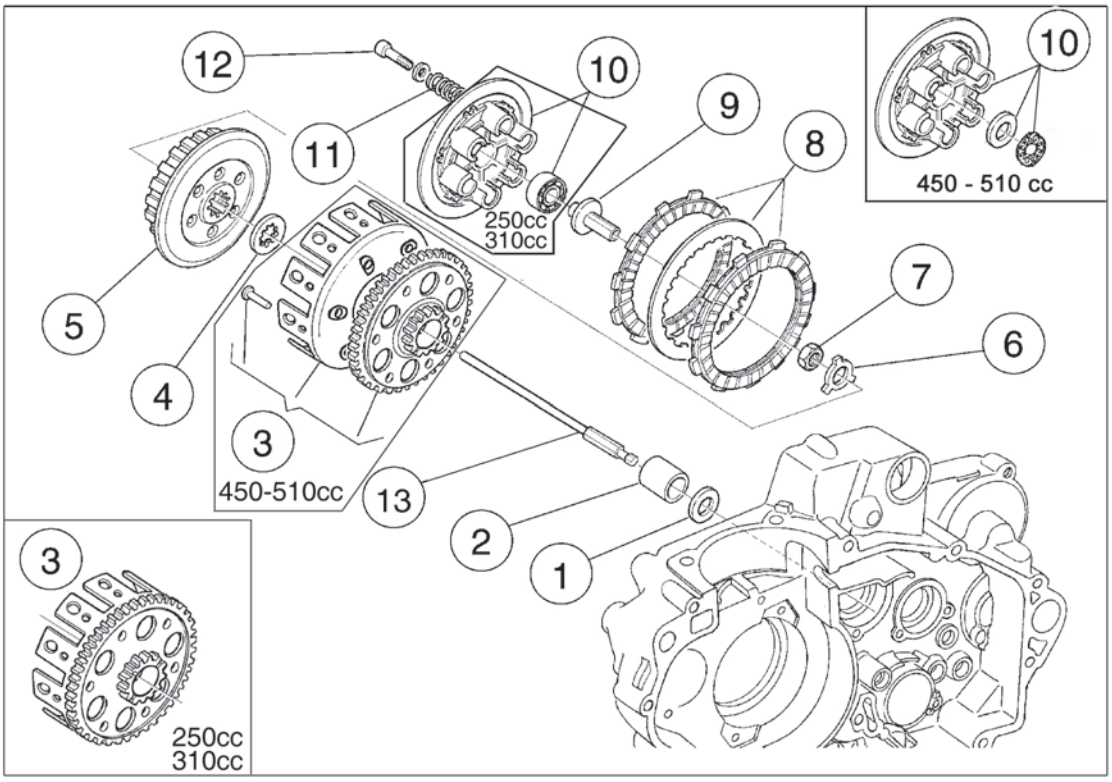

Kick start components disassembly (TC-TE-TXC)
Release spring (1) from seat on crankcase (A) and remove kick starter shaft assy (2). Remove circlip (3), washer (4) and starting idle gear (5).

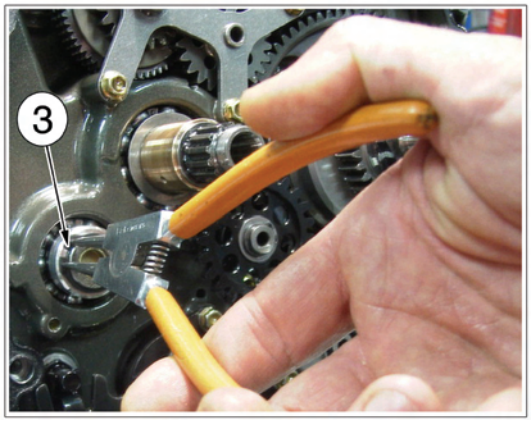

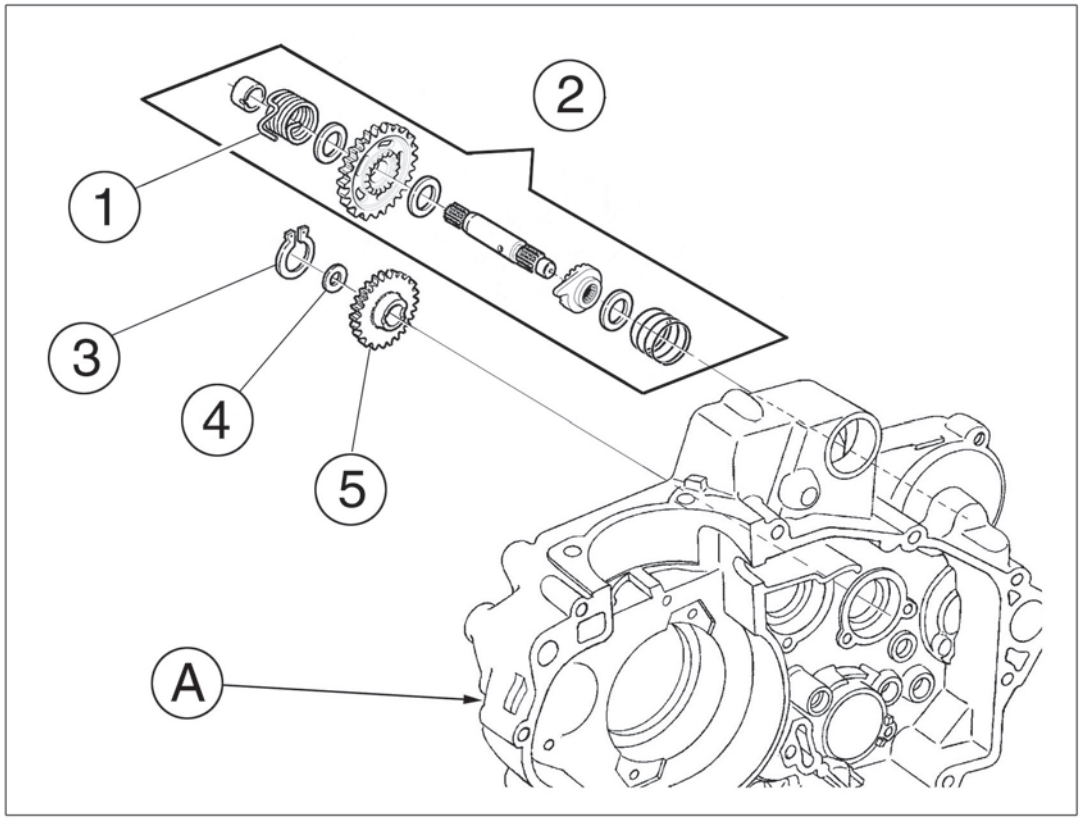

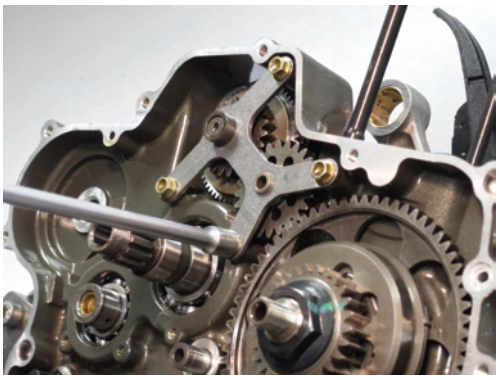

Electric starting system disassembly (TE, TXC; SMR 450-510)
Remove the four fastening screws (8 mm wrench) and starting gears retaining plate.

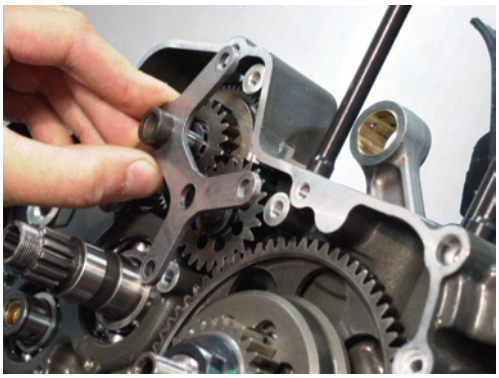

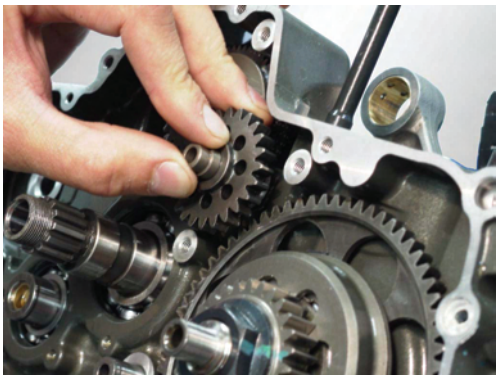

Extract the starting gear and starting idle gear.

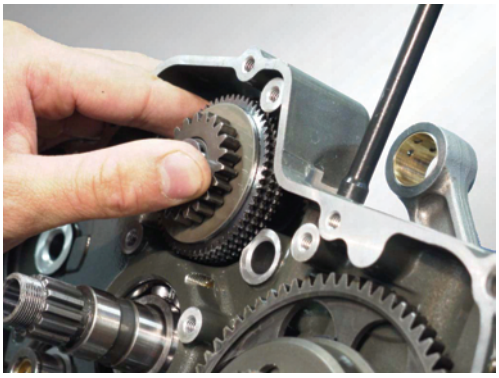

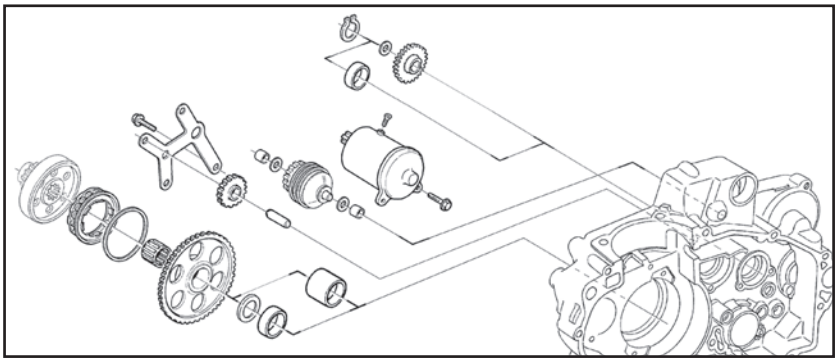

Remove the two fastening screws (8 mm wrench) and extract the starting motor.

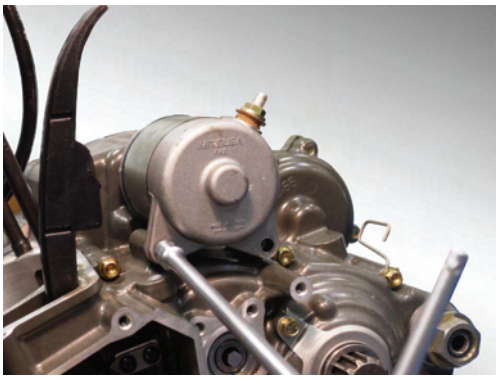

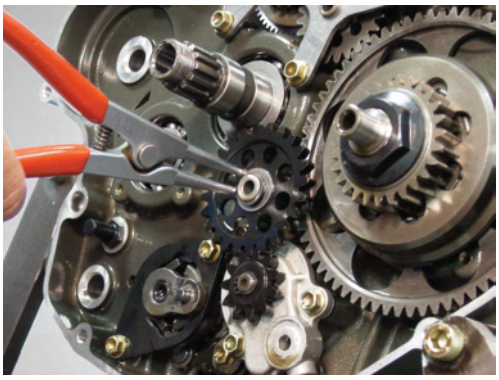

Oil pump disassembly
Using pointed pliers, remove the oil pump idle gear circlip, then the idle gear. Remove the three fastening screws (8 mm wrench) and extract: the oil pump body, the gasket, the two bushes and the oil pump.

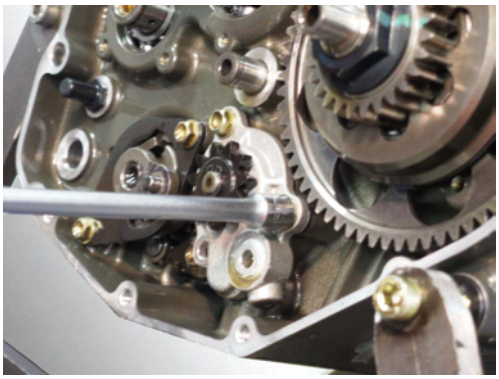

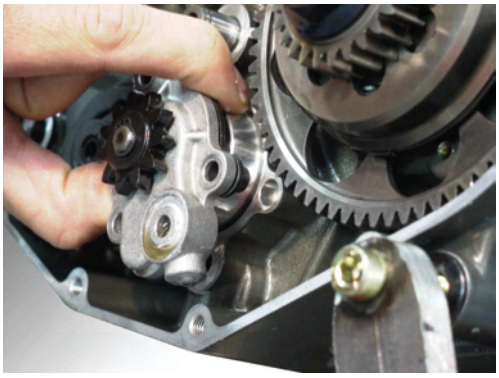

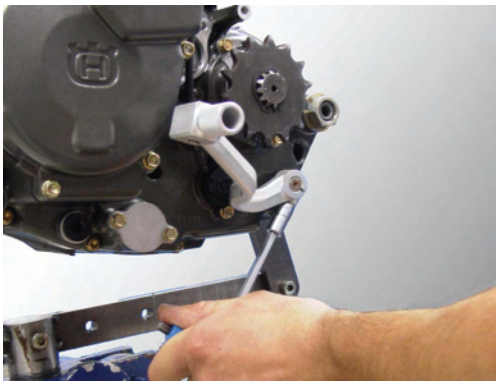

Gear control pedal and gear shifter disassembly
Make a mark on the shaft showing the position of the gear control pedal to make the reassembly easier. Remove the fastening screw (8 mm wrench) and the gear control pedal from the gear shifter shaft. Extract, from the R.H.S., the gear shifter shaft and the bushing from the ratchet wheel.

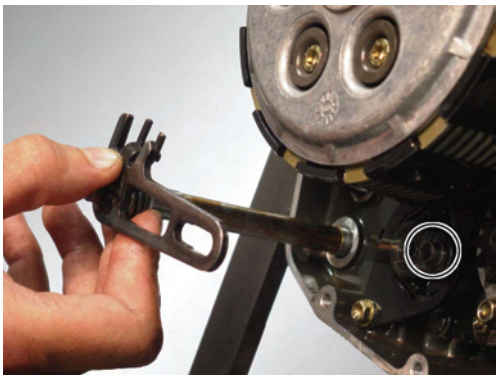

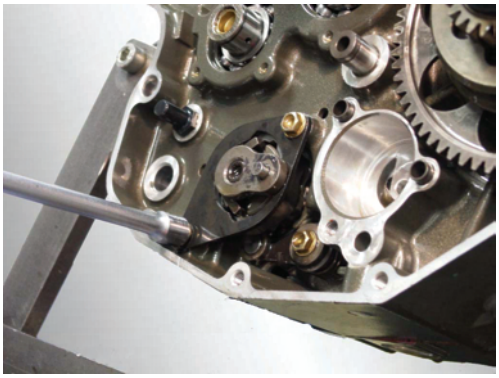

Remove the two fastening screws, the gear shifter retaining plate and the ratchet wheel.

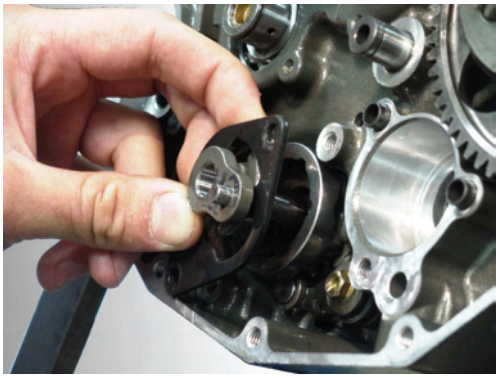

Remove the gear shifter drum fastening bolt (5 mm wrench).
Remove the fastening screw and the gears pawl together with its spring. Pay attention for not to lose the roller.

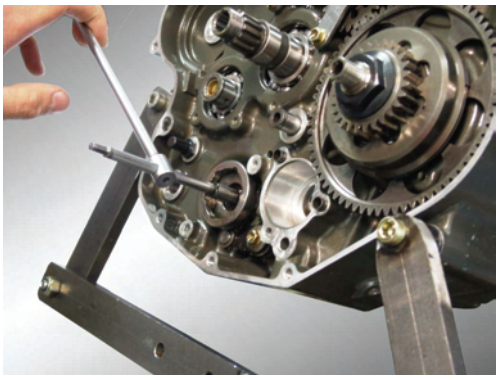

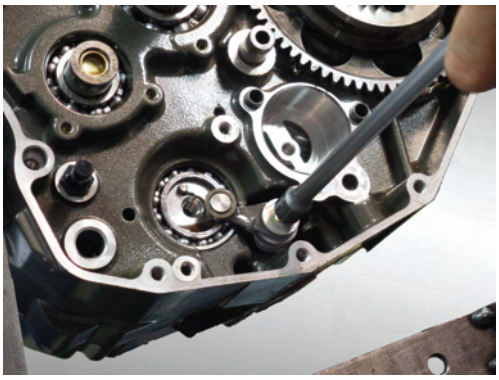

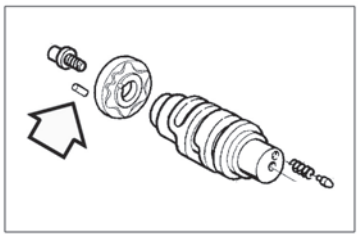

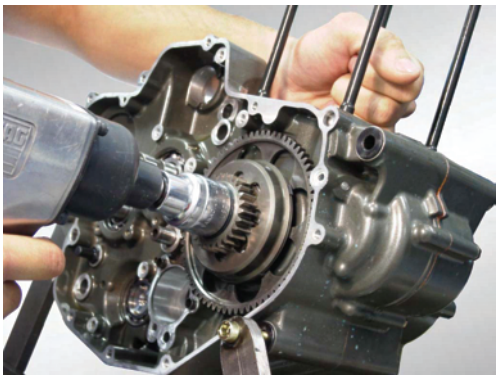

Primary trasmission driving gear disassembly
Place an aluminium shim between the teeth of the free-wheel gear (in order to prevent its rotation) and loosen the fastening nut (27 mm wrench, left side thread nut).

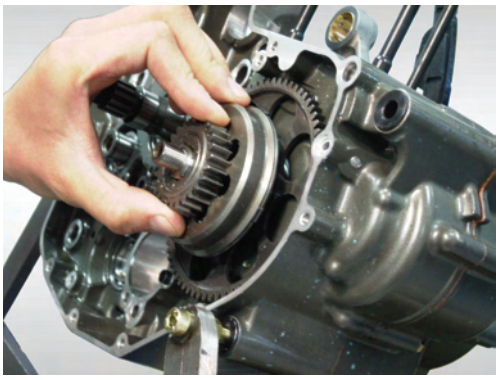

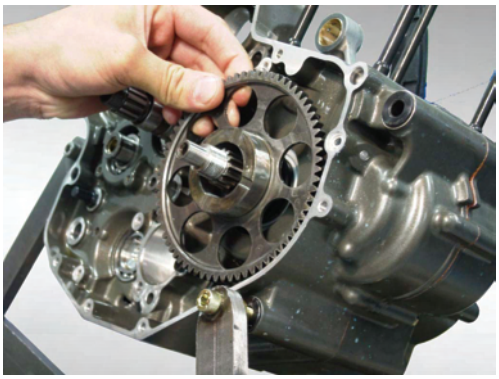

Remove the driving gear and the free-wheel (mark the reassembly direction), the free-wheel gear, the needle bearing, the washer and the spacer.

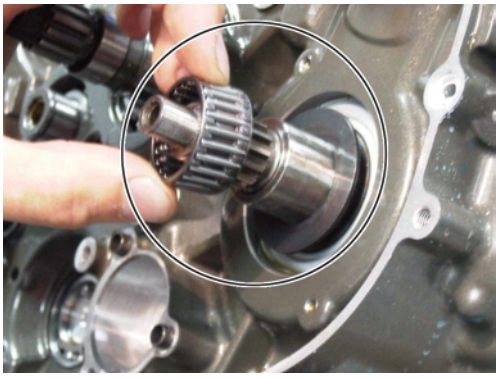

Crankcase disassembly

Remove the circlip from the secondary shaft (R.H.S.).

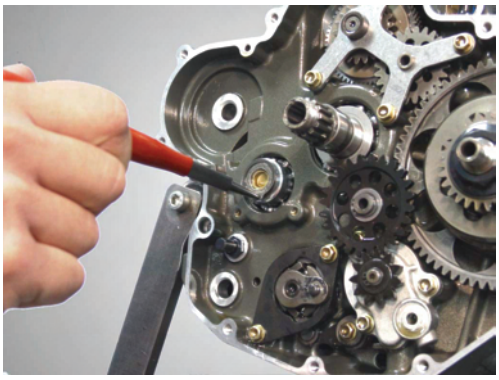

Remove the drive sprocket circlip and the drive sprocket from the secondary shaft.

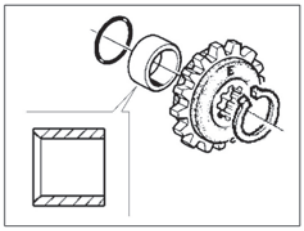

Extract the drive sprocket spacer.

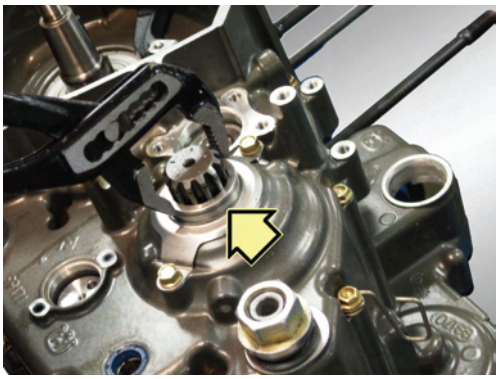

Remove the twelve screws from the L.H. crankcase side (8 mm wrench).

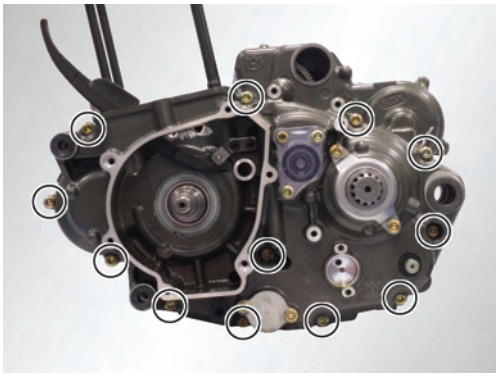

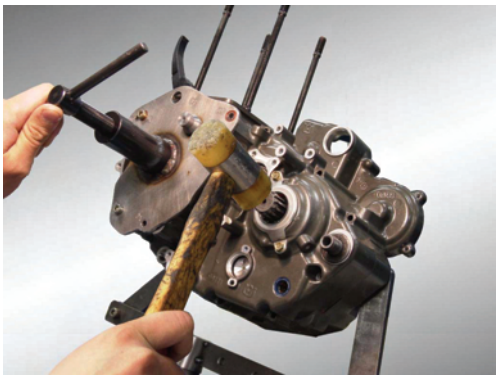

Fix the crankcase puller (code no. 1517 94702) in the holes of the flywheel cover and pull off the L.H. crankcase side.
During this operation, lightly strike the secondary shaft at intervals using a rubber hammer to avoid the crankcase from getting stuck.

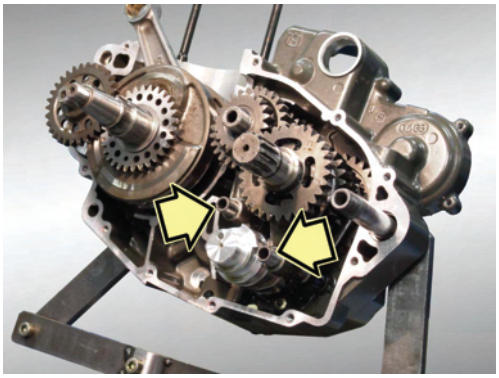

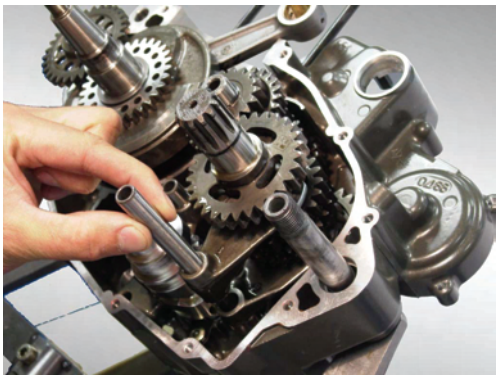

Gearbox disassembly
Remove the fork pins, the forks and the selector drum so they do not interfere with each other: the following pictures show the correct disassembling sequence.
(Secondary shaft fork pin).
(Secondary shaft forks).

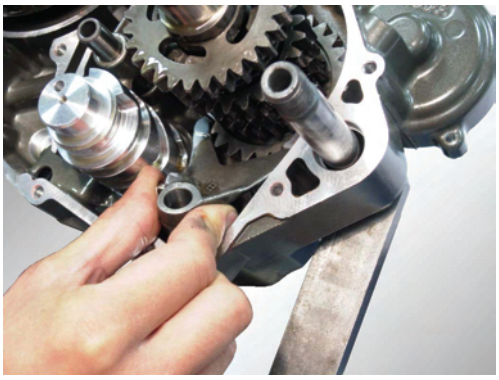

(Primary shaft fork pin).
(Selector drum).
(Primary shaft fork).

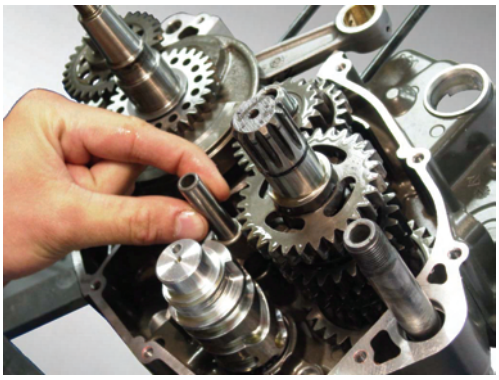

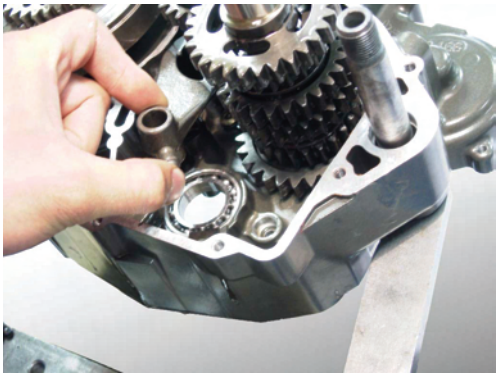

Extract the primary and secondary shaft assemblies.

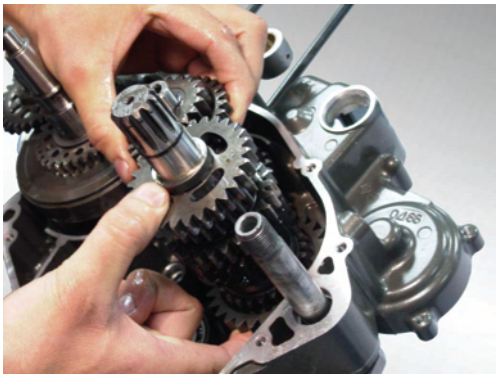

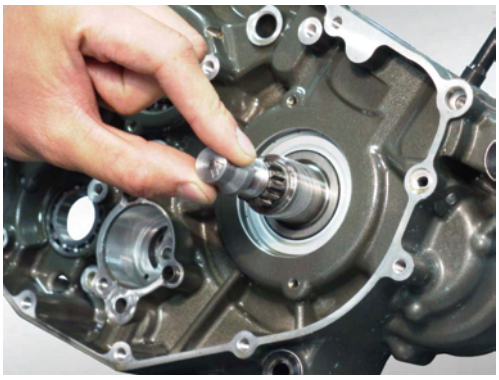

Crankshaft and counter balancing shaft disassembly (SMR 450-510)
Place the puller bushing on the R.H.S. of the crankshaft.
Fix the puller on the crankcase half and push out th crankshaft (strike lightly the layshaft with a rubber hammer in order to avoid it from getting stuck).

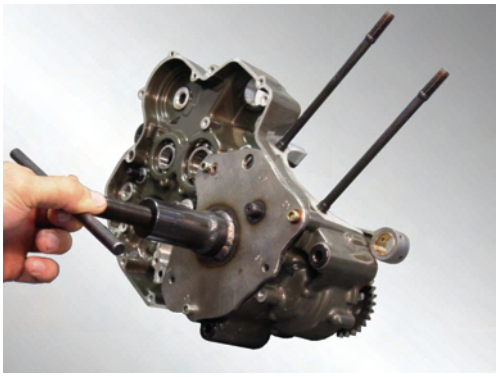

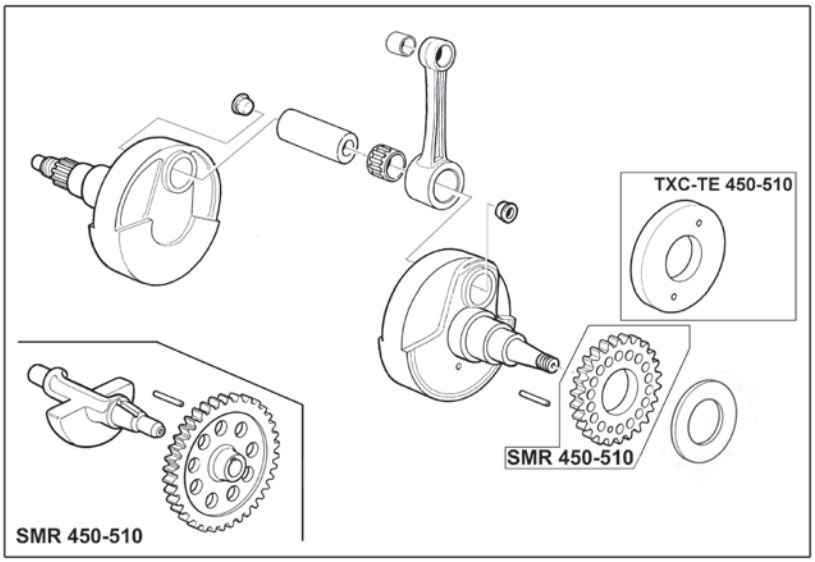

Place the layshaft idle gear disassembly tool and extract the idle gear.

Place the crankshaft in a suitable position and press the crankpin out of one of the crankshaft flywheels.

Remove the connecting rod with the needle bearing from the flywheel then turn the flywheel over half and press out the crankpin.

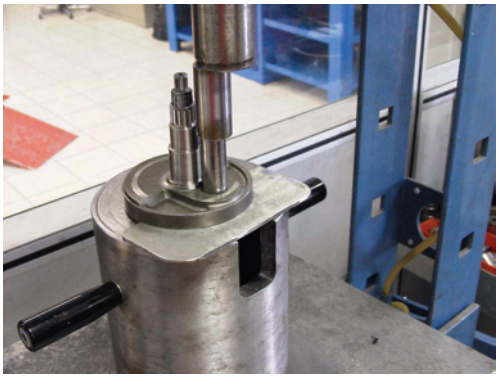

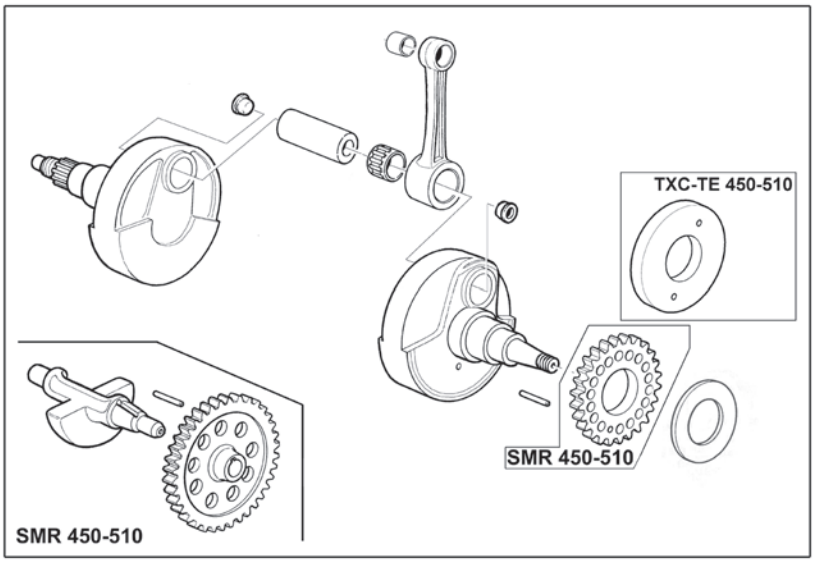

ENGINE OVERHAULING

Cleaning of components G.2
Assemblies G.2
Cylinder head G.2
Recutting the valve seats G.3
Valve guides G.5
Replacement of valve guides G.5
Valve G.6
Valve spring G.6
Installation of valves G.7
Inspection of rocker arm G.8
Starter decompressor G.8
Camshaft G.9
Camshaft chain and gearing G.10
Camchain tensioner G.10
Cylinder G.11
Piston G.11
Cylinder-piston fitting G.12
Gudgeon pin G.13
Piston rings G.14
Piston rings/cylinder clearance G.14
Piston ring/Piston rings groove clearance G.15
Gudgeon pin/connecting rod small end clearance G.15
Connecting rod big end radial clearance G.15
Connecting rod big end side clearance G.16
Crankshaft G.16
Connecting rod small end bush replacement G.17
Clutch unit G.18
Clutch housing-friction disc clearance G.18
Clutch spring G.18
Oil pump G.20
Gear selector fork and gearing G.20
Selector drum G.21
Carburettor overhauling (TC-TXC) G.21
"Keihin" carburettor adjustment (TC-TXC) G.22
Carburettor checking G.23

Section G

Cleaning of components

All component must be cleaned with petrol and dried with compressed air.

During this operation inflammable vapours burst out and metal particles may be violently ejected. Consequently, it is recommended to work in a room free from bare flames or sparks and that the operator wears goggles.

Assemblies

For a good and efficient engine operation, it is essential that all assemblies are within the tolerances prescribed. In fact, a “close” assembly causes seizures as soon as the moving members heat up; while a “wide” assembly causes vibrations which in addition to being noisy accelerate the wear of the moving components.

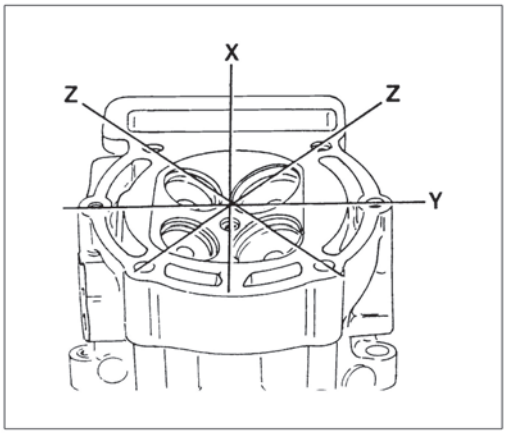

Cylinder head

Remove carbon deposits from the combustion chamber using a rounded scraper.

Do not use a sharp tool to avoid valve seats and spark plug thread damaging.

Check the machined surfaces of the cylinder head using a straight edge and a feeler gauge taking readings at the points shown in the figure. If the reading at any point is greater than the limit prescribed then regrind the contact surface with the cylinder. Cylinder head distortion limit: 0.0019 in.

Recutting the valve seats
Clean carbon and deposits from the valves. Apply some “Prussian blue” to the valve face and lap it against the seat with a suitable lapping tool. Remove the valve and measure the width “X” of the contact surface. If the width exceeds 0.06 in. the seat should be recut.

Standard width of the contact surface is:
A = 0.0354÷0.0433 in. for the INTAKE
A = 0,0354÷0,0394 in. for the EXHAUST.

The valve can not be ground. If the valve is damaged replace the valve.

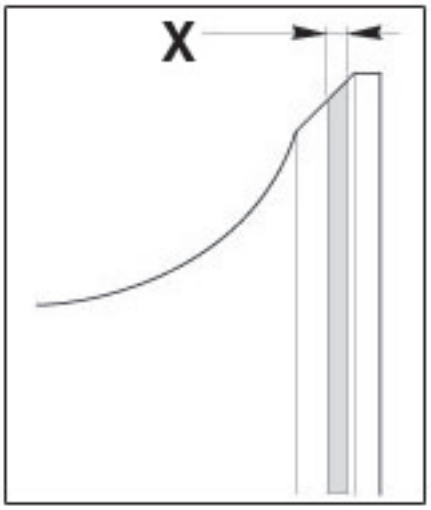

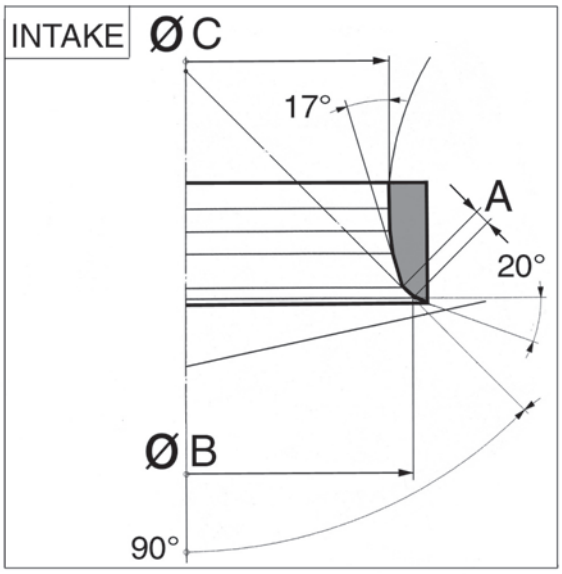

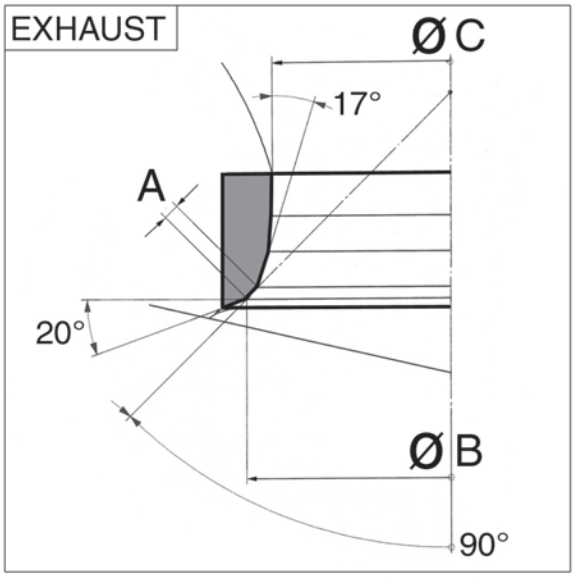

	ø	250-310	450-510
INTAKE	B	30,10÷30,15 mm 1,185÷1,187 in.	36,60÷36,65 mm 1,441÷1,443 in.
	C	27 mm 1,063 in.	33 mm 1,299 in.
EXHAUST	B	24,60÷24,65 mm 0,968÷0,970 in.	30,60÷30,65 mm 1,205÷1,207 in.
	C	21,5 mm 0,846 in.	27,5 mm 1,083 in.

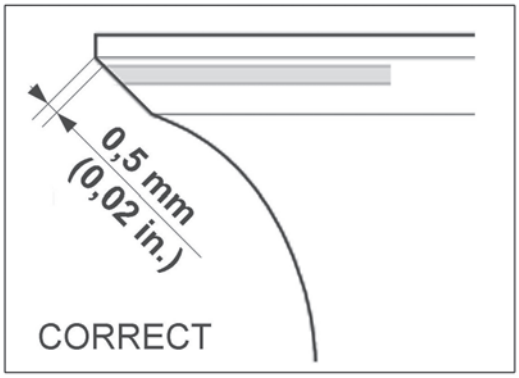

Check the valve seat, if there are any low spots or other damage, the seat must be recut. It is important that the contact surface on the valve is in the right place on the valve. Use marking colour to determine where is the contact surface. The contact surface should be 0.02 in. from the edge of the valve.

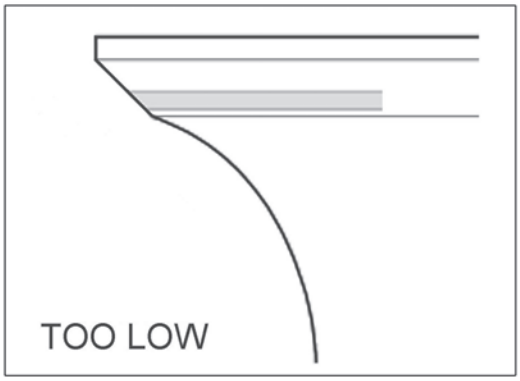

If the contact surface is too low, recut the seat with the 73° and the 45° cutters.

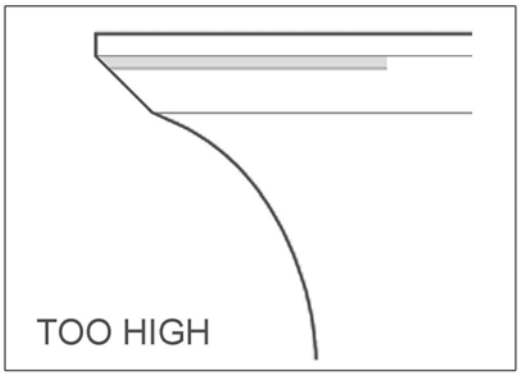

If the contact surface is too high, recut the seat with the 20° and the 45° cutters. Make sure that the width of the contact surface is correct.

Valve guides
Carry out a careful visual check of the valve guides.
The valve guides should be checked for wear by measuring the clearance between the valve stem and valve guide; use a dial gauge and measure the clearances on the “x” and “y” axes.
Inlet valve (250-310-450-510): nominal clearance 0.000315÷0.00138 in.
Wear limit: 0.002 in.
Exhaust valve (250-310-450-510): nominal clearance: 0.0007÷0.00177 in.
Wear limit: 0.003 in.

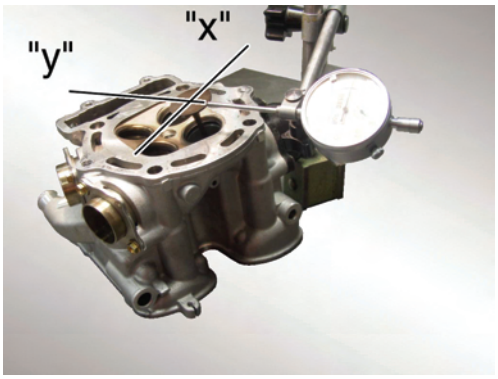

Replacement of valve guides
Use a suitable drift and drive out the guide from the cylinder head.
Make sure that the cylinder head isn’t damaged.

Heat the cylinder in an oven to 170°C (338°F).
Use a suitable drift and install a new valve guide from the top of the cylinder head. Put some oil on the guide before mounting. Mount new seal rings.

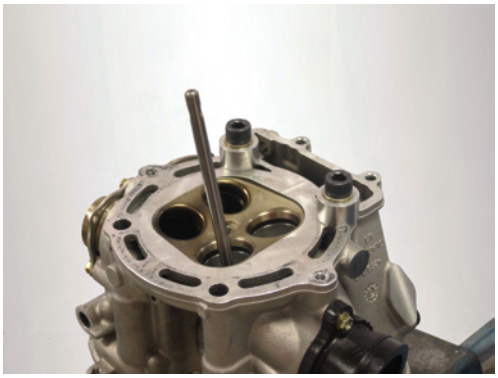

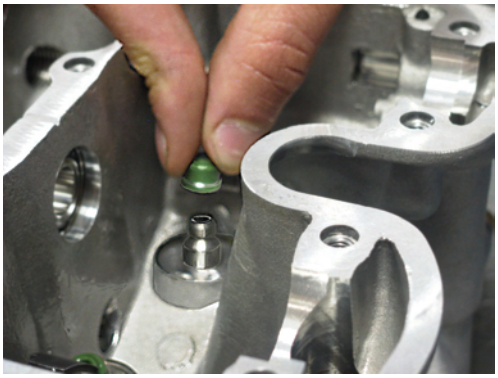

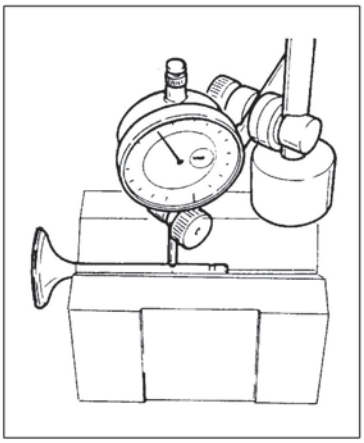

Use a suitable reamer and cutting oil when the valve guide is reamed.
Turn the reamer when it is removed, so that no longitudinal scratches occur.

When a valve guide is replaced, the valve seat must be refaced

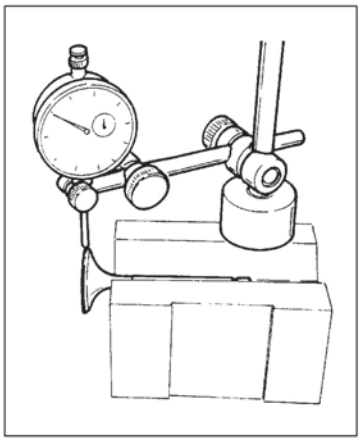

Valve
Check that the valve stem and contact surfaces are in good condition. There should be no pitting, cracks, distortions or signs of wear. Carry out the following checks:
- Check the valve stem for distortion by resting it on a Vee block and measuring the distortion with a comparator. (Wear limit: 0.0019 in).
- Check the concetricity of the valve head by resting an angle comparator against the head and then rotate the valve in a Vee block. (Wear limit: 0.0012 in).

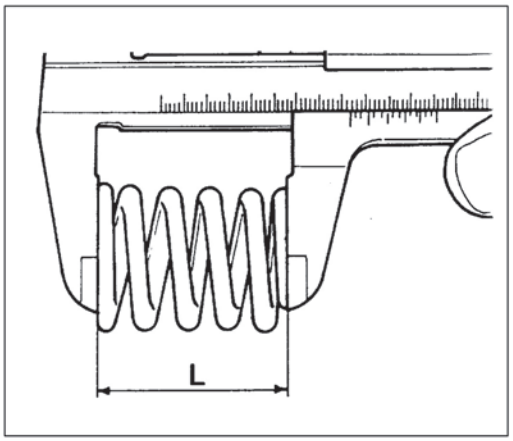

Valve spring
Check the free length “L”. If this does not correspond to the prescribed limits then substitute the springs.
250-310 cc spring: L= 1.38 in. - Wear limit: 1.3 in.
450-510 cc spring: L= 1.71 in. - Wear limit: 1.6 in.

If it is necessary to change one of the springs then all the other springs should also be changed.

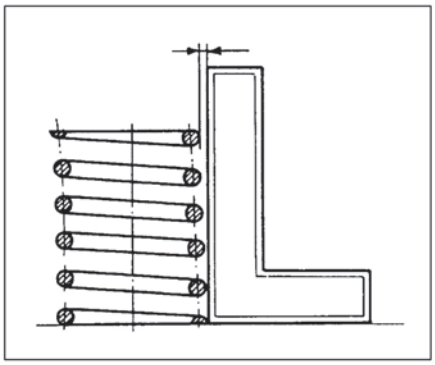

Check the squareness of the valve springs.
The spring should not deviate by more than 0.059 in. either side.

Installation of valves
Lubricate the valve guides and valve stem with oil when the valve is installed. Install the seal ring, the springs and the cup.

Use tool code 8000 39521 to compress the valve springs and can install halves cones.

Do not compress the valve springs more than necessary. Do not damage the cylinder head.

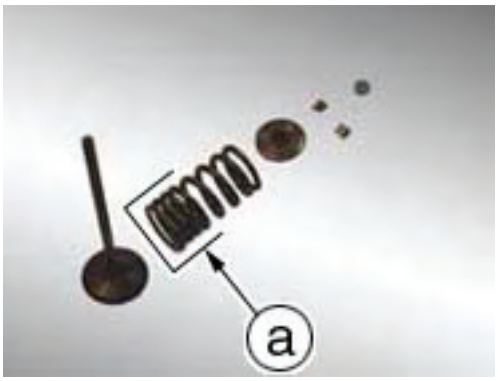

a: CYLINDER HEAD SIDE

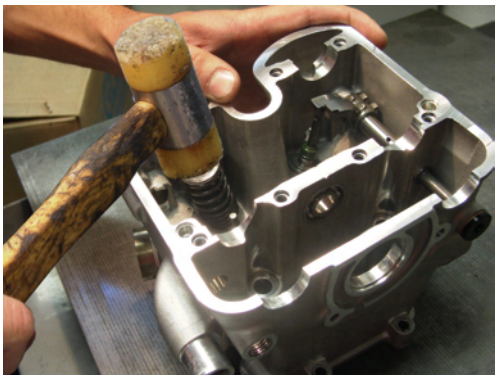

Tap gently on the valve stem with a plastic hammer to make the cotters seat.

Hit straight on the top of the valve stem so that the valve stem doesn't get out of true.

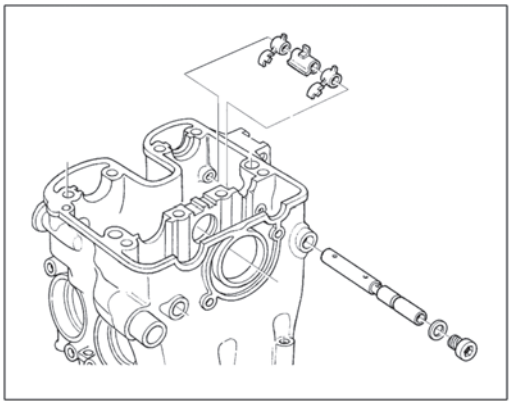

Inspection of rocker arm

Check the clearance between the rockerarm and the rocker arm shaft. Measure the inner diameter of the rocker arm and the outer diameter of the rocker arm shaft and accurately determine the clearance. Maximum clearance 0.04 in. If greater, replace the two rocker arms. When reassembling tighten rocker-arm axles to 25 Nm-2,55 Kgm18.4 ft/lb. (+LOCTITE 243).

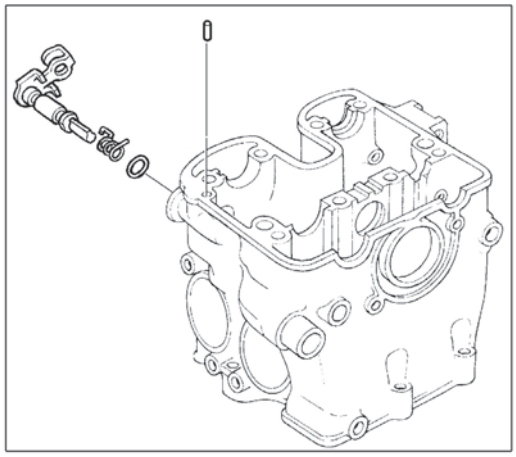

Starter decompressor

Check that starter decompressor rotate freely. If there is an oil leak, change the O-ring.

Camshaft
Check that cam surfaces are scored, stepped, grooved etc. Insert the camshaft between two references and then check deviation using two comparators.
Wear limit: 0.0039 in.
Check that the cams are in good conditions, without wear or deformation.

Cam height “H”
INTAKE (new) = 36,57 mm/ 1.440 in. (450-510); 36,69mm /1.444 in. (250-310)
EXHAUST (new) = 35,94 mm/ 1.415 in. (450-510) and (250-310)

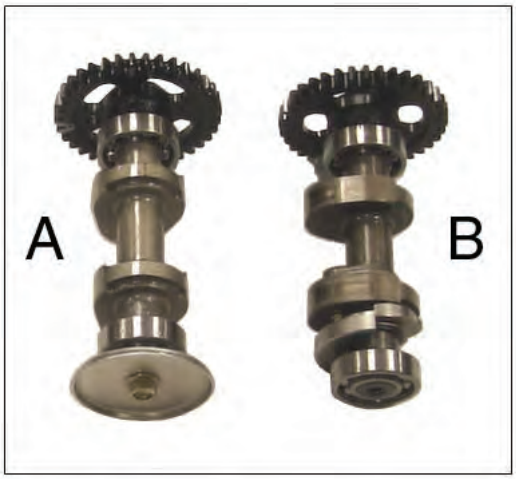

A: INTAKE

B: EXHAUST

A)

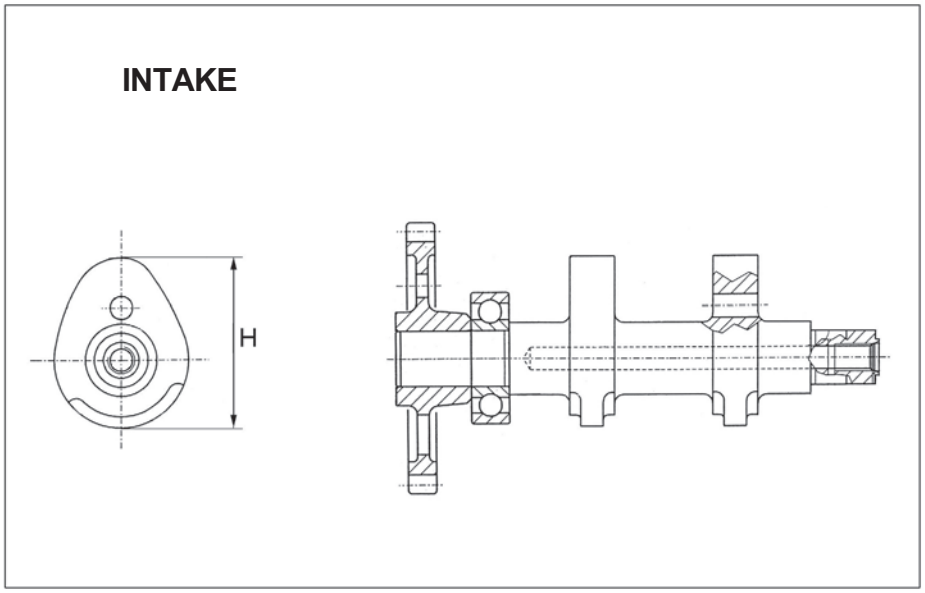

B)

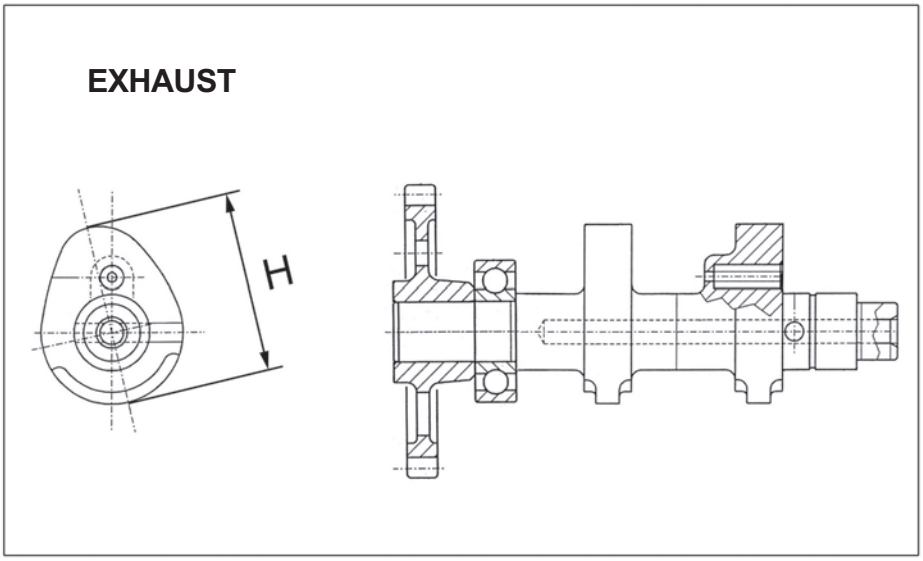

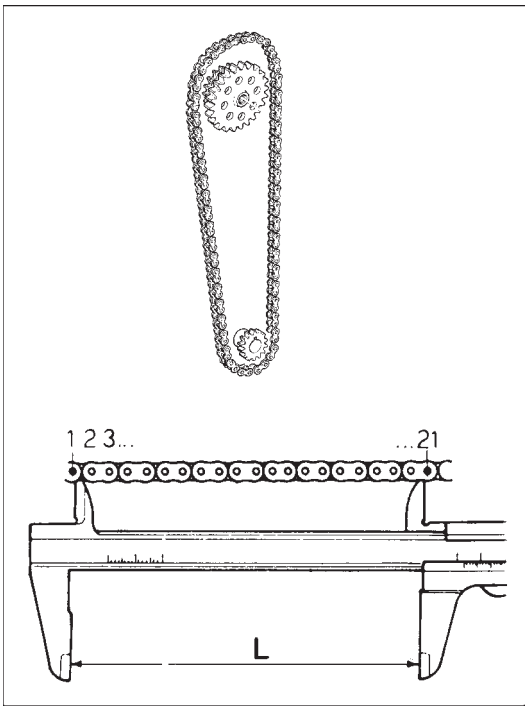

Camshaft chain and gearing

At every engine overhaul the wear of the camshaft gear teeth and the chain rollers should be checked. If the teeth are badly worn then replace the three components. Hold the chain taut and check the length of 20 links (21 pins).

If any one of three cam drive components is found to be worn then all three components should be replaced.

"L" STANDARD	WEAR LIMIT
155,5 mm (6.12 in)	158 mm (6.22 in)

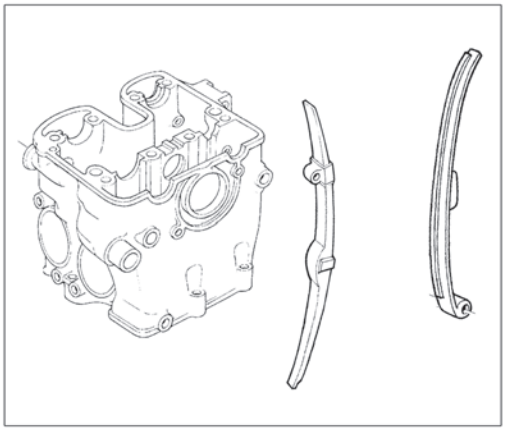

Camchain tensioner

The camchain tensioners should be replaced when the wear material is worn through and metal is visible in the bottom of the wear marks.

Cylinder
The cylinder liner bore should be completely smooth, without grooving or scoring. To obtain the taper and the ovality of the cylinder liner bore take measurements at three different heights and in two positions at 90° to each other.
Max taper (wear limit): 0.0019 in.
Max ovality (wear limit): 0.0019 in.
If the wear limits are greater than those prescribed, then replace the cylinder with the piston; reboring the cylinder liner is not possible since the cylinder liner has been given a special hardening treatment.

Piston
Thoroughly clean the piston crown and piston ring grooves of any carbon deposits. Carry out a visual check and a measurement check of the piston, there should be no signs of scoring, excessive wear, cracks or other damage.

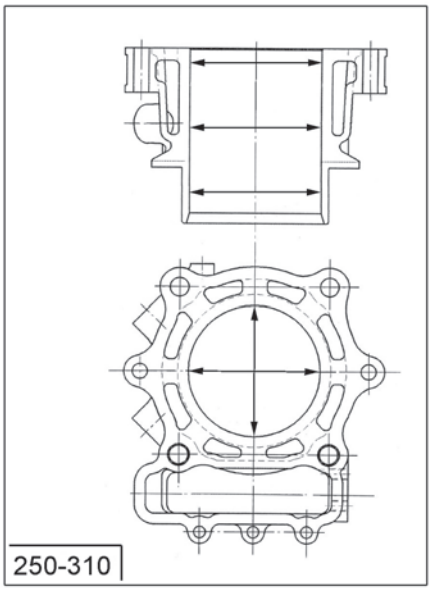

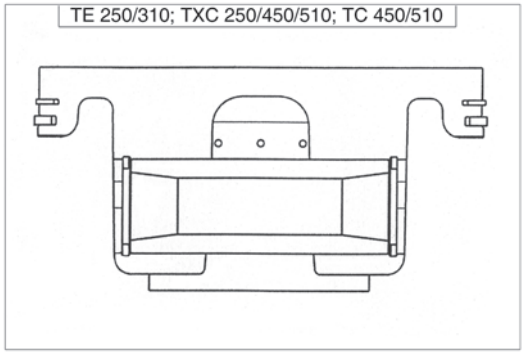

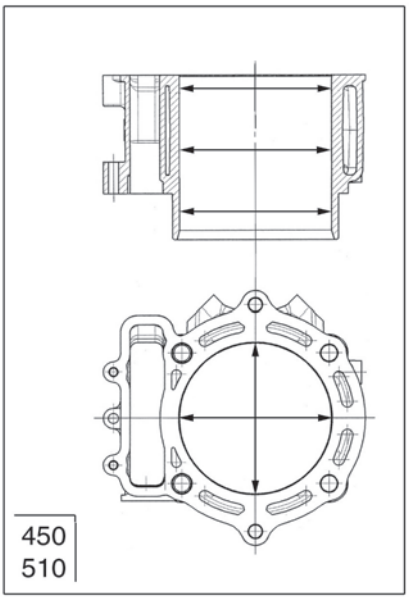

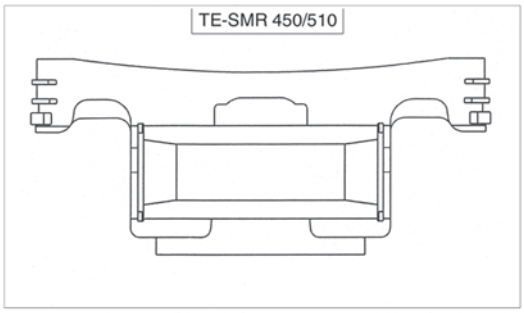

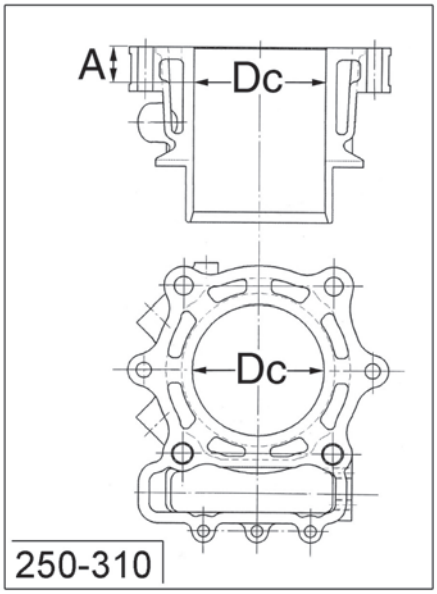

Cylinder piston fitting
Cylinder bore
Use an internal micrometer (Dc) and take the reading at “A” distance from the top 0.80 in. (250-310 cc) or 0.39 in. (450-510 cc).

Piston diameter
Take the piston diameter (Dp) at “B” distance of 6 mm/0.24 in. (TE-TC-TXC 250), 8 mm/0.31 in. (TE-SMR 450/510), 9 mm/0.35 in. (TE 310, TC-TXC 450-510), from the top. The clearance is = Dc-Dp.

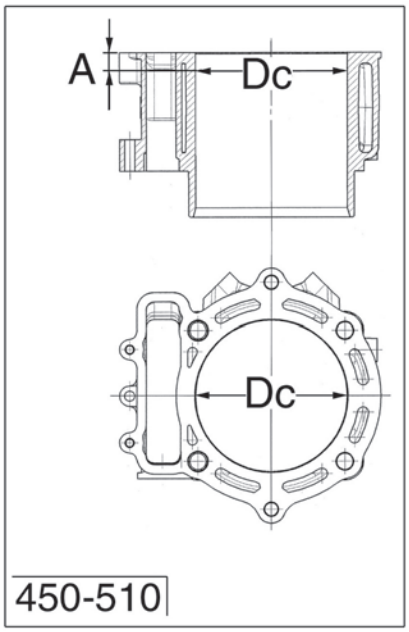

MODEL	CLEARANCE (Dc-Dp)	WEAR LIMIT
250	0,020÷0,046 mm (0.00079÷0.00181 in.)	0,10 mm (0.004 in.)
310	0,037÷0,063 mm (0.00146÷0.00248 in.)	0,15 mm (0.006 in.)
450-510	0,025÷0,055 mm (0.0010÷0.0022 in.)	0,12 mm (0.0047 in.)

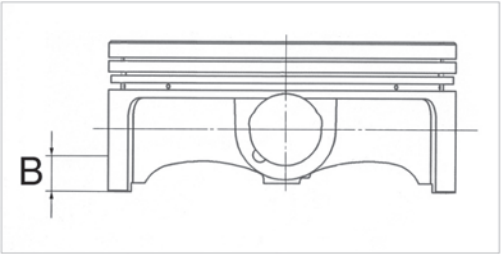

Gudgeon pin

The gudgeon pin should be perfectly smooth without scoring, grooving or bluish discoloration caused by overheating.

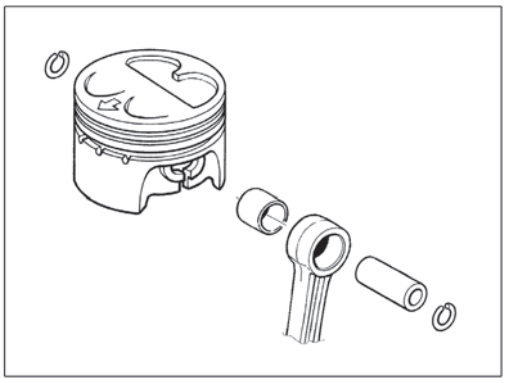

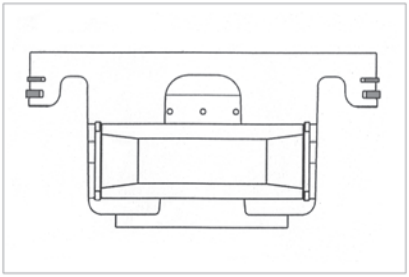

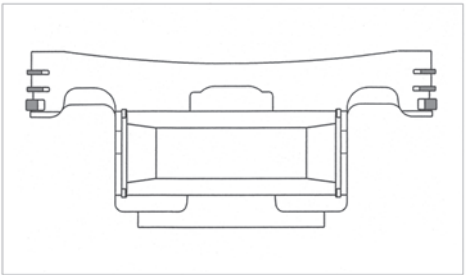

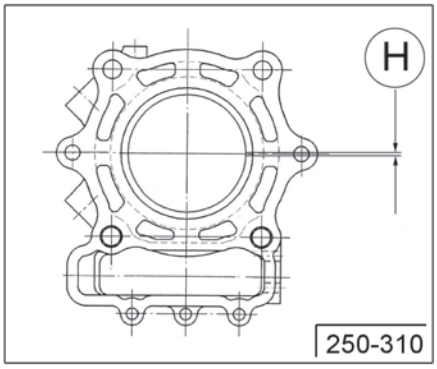

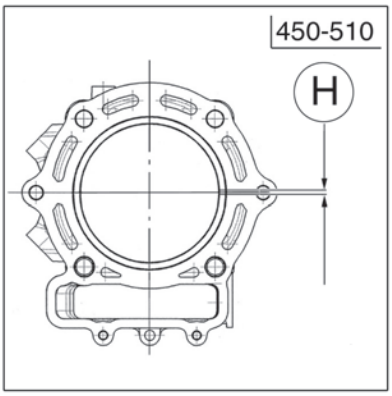

Piston rings
The piston rings should not show signs of excessive wear or scoring.
Spacer pistons are supplied complete with rings and gudgeon pins.

Piston rings/cylinder clearance
Introduce the ring into the lower part of the cylinder. (i.e. where there is least wear), ensure that the ring is squared up and then check the ring end gap.

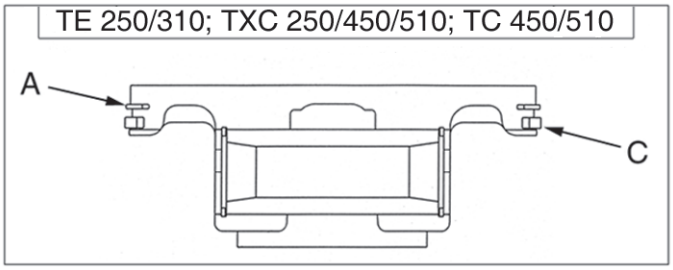

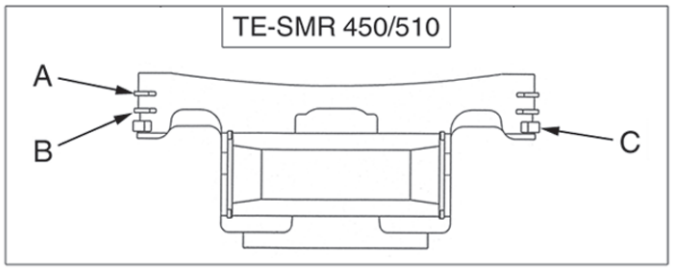

Piston rings/cylinder clearance

PISTON RING	NOMINAL CLEARANCE (H)	WEAR LIMIT
"A"	**TE-TXC 250, TE 310**: 0,20÷0,35 mm (0.00787÷0.0138 in.)	0,5 mm (0.0197 in.)
"A"	**TE-SMR 450, TC, TXC 510**: 0,25÷0,40 mm (0.0094÷0.00157 in.)	0,7 mm (0.027 in.)
"A"	**TE-SMR 510**: 0,20÷0,45 mm (0.00787÷0.0177 in.)	0,7 mm (0.027 in.)
"B"	**TE-SMR 450**: 0,40÷0,55 mm (0.00157÷0.0216 in.)	1 mm (0.0394 in.)
"B"	**TE-SMR 510**: 0,20÷0,45 mm (0.00787÷0.0177 in.)	0,7 mm (0.027 in.)
"C"	**TE-TXC 250, TE 310**: 0,20÷0,70 mm (0.00787÷0.0275 in.)	1,2 mm (0.047 in.)
"C"	**TE-SMR 450**; **TC, TXC 510**: 0,20÷0,70 mm (0.00787÷0.0275 in.)	1,2 mm (0.047 in.)
"C"	**TE-SMR 510**: 0,10÷0,20 mm (0.00394÷0.00787 in.)	0,35 mm (0.014 in.)

Piston ring/Piston rings groove clearance
Use a feeler gauge to check the axial play (H) of the rings in the groove. The manufacturer mark, if it is present on the piston ring, must be turned upwards.

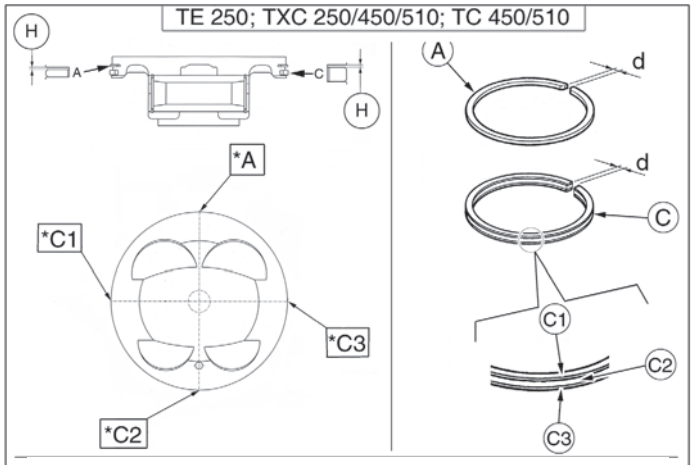

PISTON RING CUT SETTING

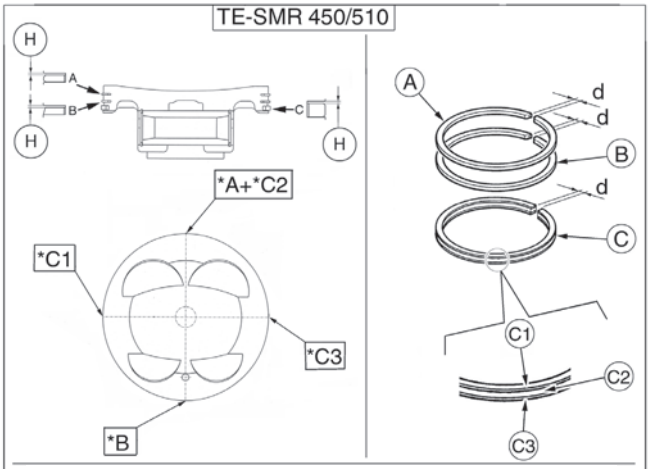

PISTON RING CUT SETTING

Gudgeon pin/conrod small end clearance (A): 0.00047÷0.00106 in. WEAR LIMIT: 0.0022 in.
Conrod big end radial clearance (B): 0.00102÷0.00141 in. WEAR LIMIT: 0.00315 in.

*: "d" cut posistion

PISTON RING	NOMINAL CLEARANCE (H)	WEAR LIMIT
"A"	**TE-TXC 250**: 0,011÷0,033 mm (0.00043÷0.00130 in.)	0,07 mm (0.0027 in.)
"A"	**TE 310**: 0,020÷0,060 mm (0.000787÷0.00236 in.)	0,11 mm (0.0043 in.)
"A"	**TC-TXC 450-510**: 0,070÷0,110 mm (0.00027÷0.0043 in.)	0,22 mm (0.0087 in.)
"A"	**TE-SMR 450**: 0,065÷0,100 mm (0.00256÷0.00394 in.)	0,24 mm (0.009 in.)
"A"	**TE-SMR 510**: 0,030÷0,065 mm (0.00012÷0.0025 in.)	0,13 mm (0.0051 in.)
"B"	**TE-SMR 450**: 0,035÷0,070 mm (0.00138÷0.00027 in.)	0,15 mm (0.0059 in.)
"B"	**TE-SMR 510**: 0,020÷0,055 mm (0.0008÷0.0022 in.)	0,11 mm (0.0043 in.)
"C"	**TE-TXC 250**: 0,040÷0,110 mm (0.0016÷0.0043 in.)	0,22 mm (0.0087 in.)
"C"	**TC-TXC 450-510**: 0,040÷0,120 mm (0.00016÷0.0047 in.)	0,24 mm (0.0094 in.)
"C"	**TE- SMR 450**: 0,020÷0,110 mm (0.0008÷0.0043 in.)	0,20 mm (0.0079 in.)
"C"	**TE- SMR 510, TE 310**: 0,010÷0,180 mm (0.0004÷0.0071 in.)	0,35 mm (0.0138 in.)

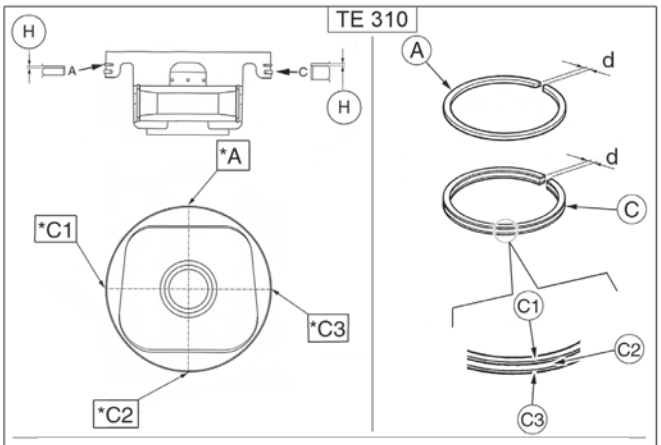

PISTON RING CUT SETTING

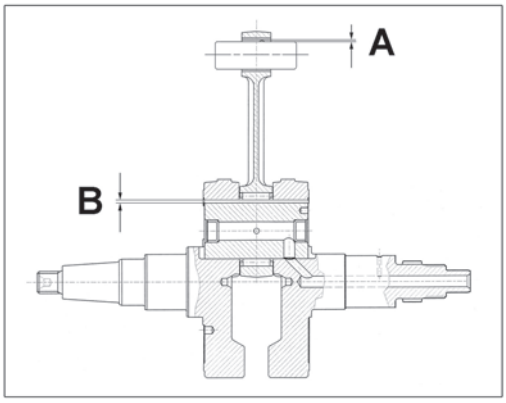

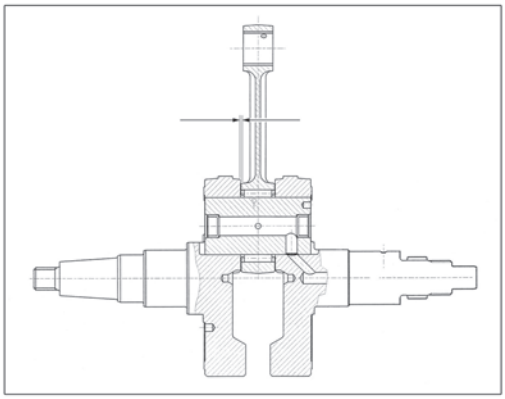

Connetting rod big end side clearance

STANDARD	LIMITE DI SERVIZIO
0,300÷0,677 mm (0.012÷0.027 in)	0,75 mm (0.03 in)

Crankshaft
Main joiurnals must not present any scores, or grooves; their threads, key seats and slots have to be in good conditions.

Crankshaft run-out

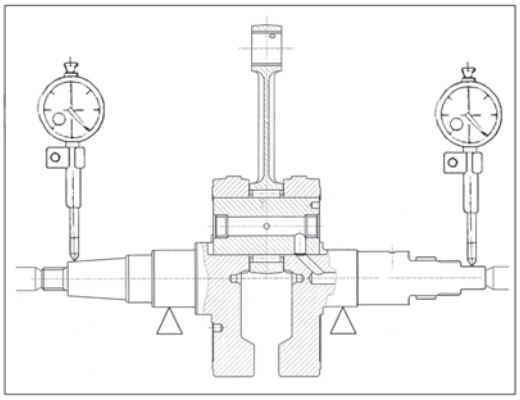

STANDARD	WEAR LIMIT
Al di sotto di 0,02 mm	0,05 mm 0.0019 in 0,05 mm 0,05 mm 0,05 mm

Crankshaft

Counter balance shaft (SMR)

Connecting rod small end bush replacement
The bush should be replaced using a correct size punch and drift.
Before the assembly, smear the bush outside surface with molybdenum disulfide grease. Insert the bush from the side marked with the elephant and check that the bush holes coincide with the ones of the rod.

The clearance between the bush and its seat is 0.00138÷0.00366 in. for 250-310 cc models and 0.00193÷0.00374 for 450-510 cc models. Ream the bush to an internal diameter “C” as indicated on table.

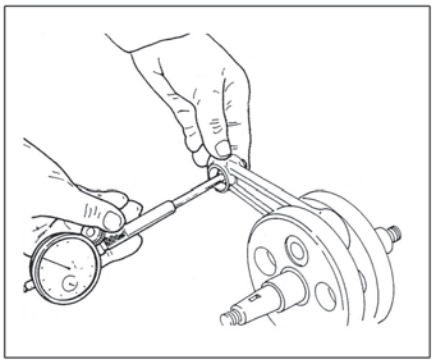

MODEL	INNER DIAMETER "C"
250-310	16,012÷16,022 mm (0.6304÷0.6308 in.)
450-510	20,012÷20,022 mm (0.7879÷0.7883 in.)

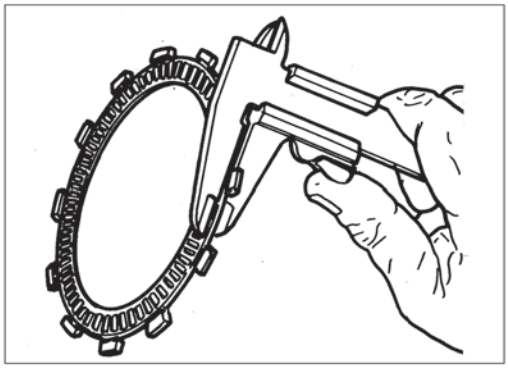

Clutch unit
Check that all clutch unit components are in good condition. The clutch discs should not be burnt or scored. Check the thickness of the clutch lining discs.
Thickness of new plate: 0.118 in. Wear limit: 0.114 in.

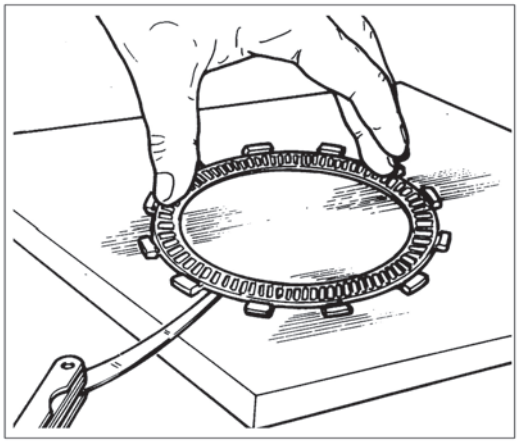

Check the distortion of each plate (both lined and unlined) by resting on a flat surface; use a feeler gauge.
Wear limit: 0,2 mm (0.00078 in.).

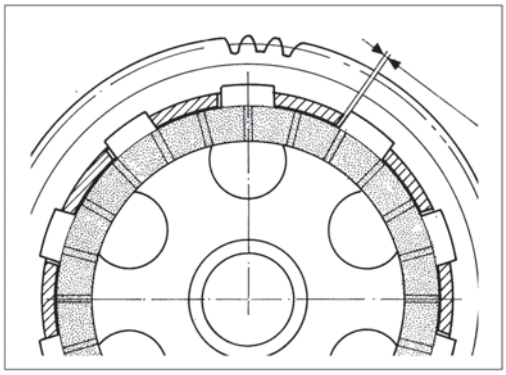

Clutch housing-friction disc clearance

STANDARD	WEAR LIMIT
0,30÷0,50 mm (0.012÷0.020 in.)	0,6 mm (0.024 in.)

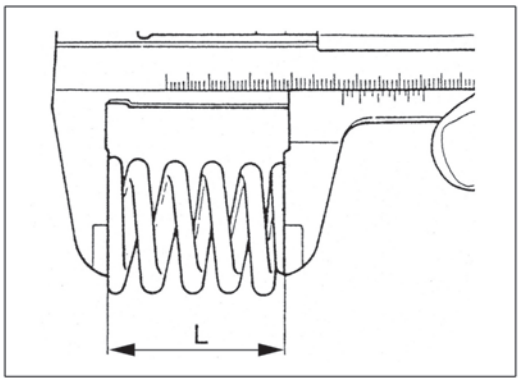

Clutch spring
Check the free lenght “L” of each spring with a gauge.
New spring: L= 1.61 in. Wear limit: 1.53 in.
Replace any spring which does not meet with this specification.

Clutch checking

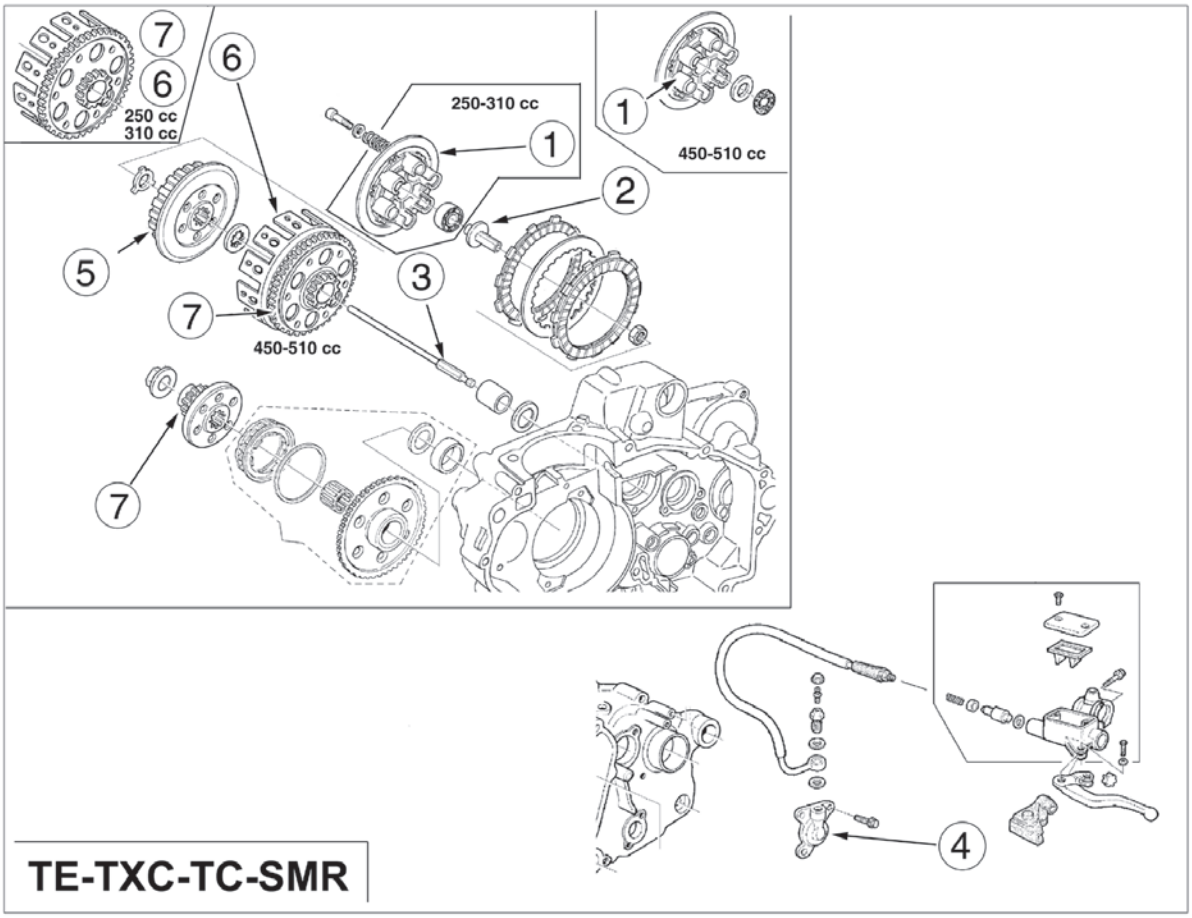

1- Clutch disc pressure plate, 2- Clutch plate, 3- Clutch disengagement rod, 4- Clutch slave cylinder: Check that these parts are not worn or broken. If not, replace the part.

5- Clutch disc hub: check the housing grooves of discs without friction material for wear or failure. If worn or breaked, replace the part.

6- Clutch disc housing: Check the housing grooves of discs with friction material for wear or failure. Check the needle bearings seats for wear. If worn or breaked, replace the clutch disc housing.

7- Set of matched primary: Check the teeth gear for wear and failure. If worn or breaked, replace it.

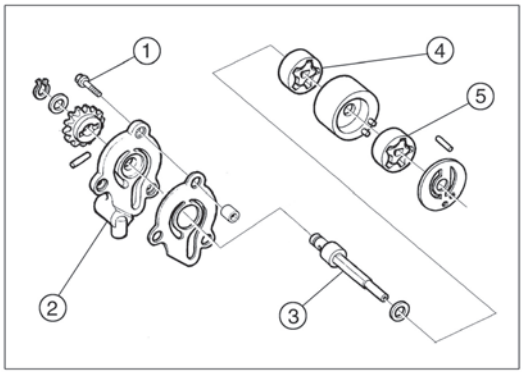

Oil pump

If they were not previously removed, remove from pump: screw (1), cover (2), shaft (3), and rotors (4) and (5). Clean the rotors and ressemble the above mentioned elements. Check that the pump mounting surface is not scored, grooved or pitted.

NOTE: before reassembling, lubricate the rotors and the shaft with Engine oil.

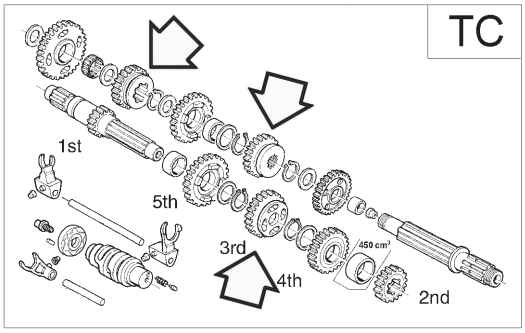

Gear selector fork and gearing

Carry out a visual inspection of the gear selector forks; any bent forks should be replaced. A bent fork will make gear changing difficult and can cause the gear to disengage without notice under power.

Use a feeler gauge to check the clearance between each selector fork and the groove on its gear. If the prescribed wear limit is exceeded for any one of the three gears then it is necessary to establish whether the gear or the selector fork it so be changed; this can be done by measuring the width of the gear groove and the thickness of the fork slide.

Clearance between fork and rear (new): 0.00866÷0.0146 in.

Wear limit: 0.0197 in.

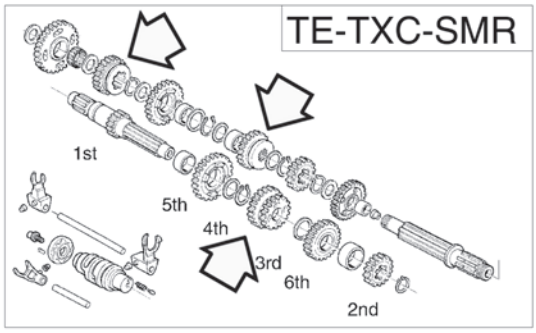

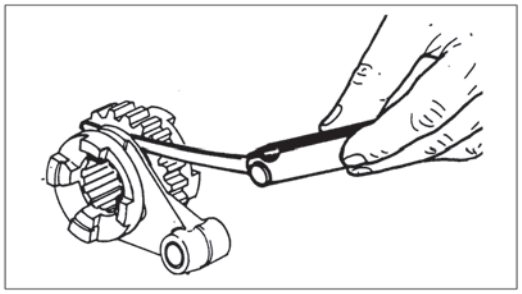

Selector drum
Check grooves "A" for wear or dents: if grooves are worn or dented, replace drum selector. Check drum selector for bent or damage: if bent, worn or damaged, replace it.

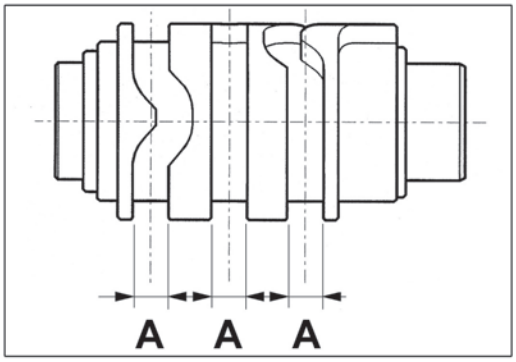

Carburettor overhauling (TC 450-510; TXC 250-450-510)
Thoroughly wash with petrol and dry with compressed air all carburetor componets. Thoroughly clean all jets and ducts with compressed air only.
Never use tips of metal wires. Check that the gate valve is in good condition and runs freely in its housing but without excessive clearance.
Check that the pin and spray nozzle are in good conditions. Check that the pin valve has a good seal.

CARBURETTOR SETTING "KEIHIN" (TC-TXC)
1-Main jet: 175 (250); 180 (450-510);
2-Idle jet: 42 (250); 45 (450-510);
3-Starting jet: 72 (250); 85 (450-510)
4-Main air jet: 200
5-Throttle valve: 15/M
6-Tapered needle/needle position: OBDVR/4 (250); OBDVR/5 (450-510);
7-Air screw, open by turns: 1+1/2 (250); 2 (450-510);
8-Low air jet: 100
9-Spray nozzle: P4
10-Float: g. 11,2
- Starting air jet: 4 mm / 0.16 in.
- Venturi Diameter: 37 mm (250); 41 mm (450-510);

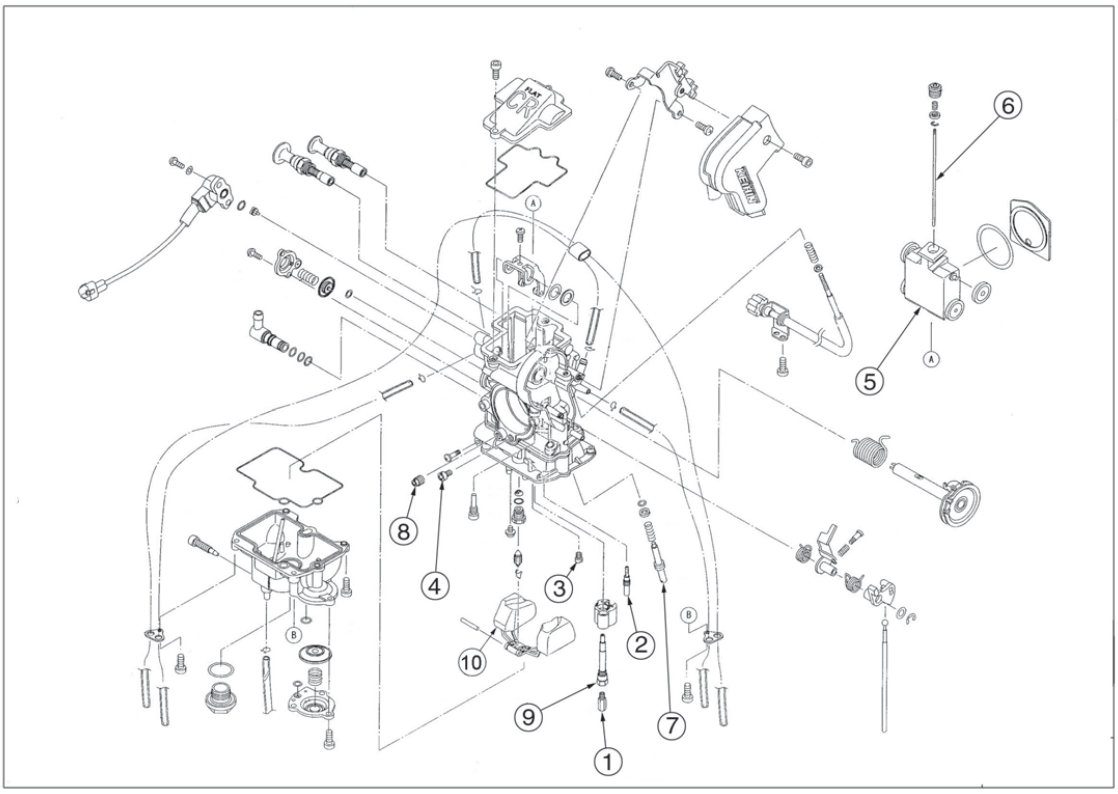

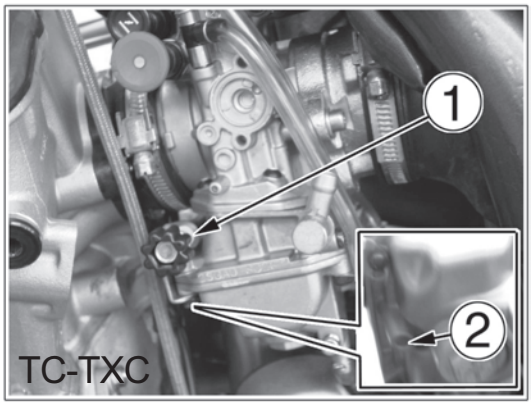

"Keihin" carburettor adjustment (TC 450-510; TXC 250-450-510)
Adjust the carburettor with warm engine and with the throttle in closed position. Work as follows:
- Turn slow running adjusting screw (1) on the left side of the bike, , until the engine is turning over at fairly high rpm (turn the screw clockwise to increase the rpm, and anticlockwise to descrease the rpm).
- Turn adjusting screw (2) clockwise until the fully closed position is reached then turn back 1,5 turns (250) or 2 turns (450-510).
- progressively loosen adjusting screw (1) to obtain the slow running required.

NOTE

An incorrect idle jet size could cause troubles of starting of the engine.
In this case:
- if turning the screw (2), no engine speed change is obtained, a smaller idle jet has to be installed;
- if the engine stops when the screw (2) is not yet completely turned, a larger idle jet has to be installled.

After the idle jet replacement, repeat the "Carburetor adjustment".
Besides, if with a completely throttle grip open, poor acceleration or slow pickup of the engine or sooty spark plug are obtained, it is necessary to check the wear of these carburettor parts: throttle valve, metering pin and needle jet (mixture enrichment). See the next pages.

Carburettor checking
1. Inspect:
- Carburetor body
Contamination: Clean
NOTE:
- Use a petroleum based solvent for cleaning. Blow out all passages and jets with compressed air.
- Never use a wire.

2. Inspect:
- Main jet (1)
- Pilot jet (2)
- Needle jet (9)
- Pilot screw (7)
- Starter jet (3)
- Main air jet (4)
- Pilot air jet (8)
Damage: Replace
Contamination: Clean
NOTE:
- Use a petroleum based solvent for cleaning. Blow out all passages and jets with compressed air.
- Never use a wire.

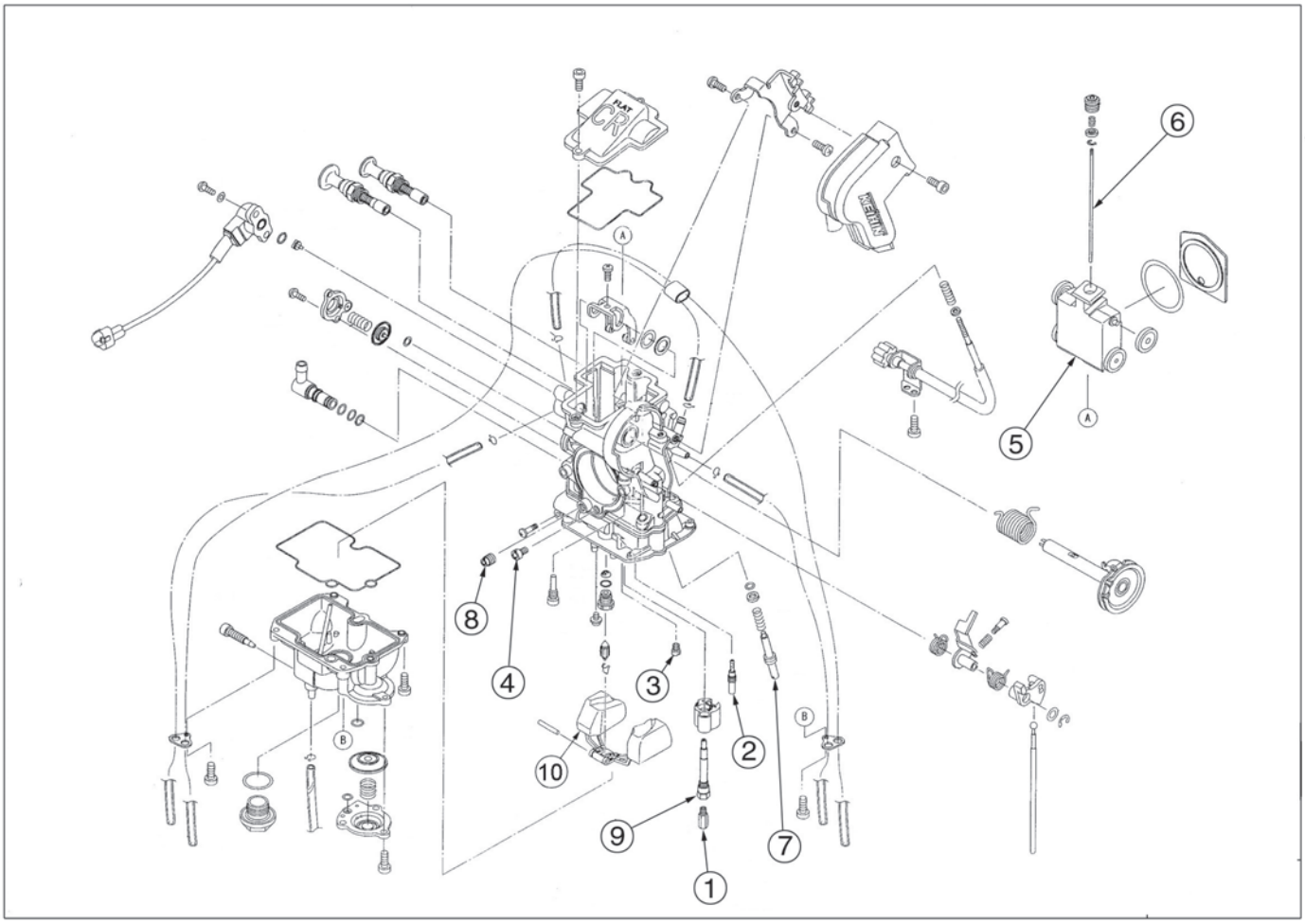

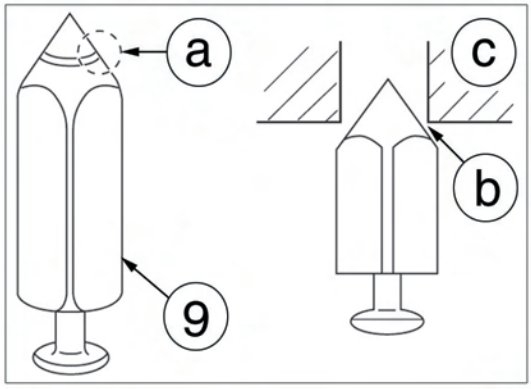

NEEDLE VALVE
Inspect needle valve (9) and valve seat (c)
Grooved wear (a): Replace. Dust (b): Clean.

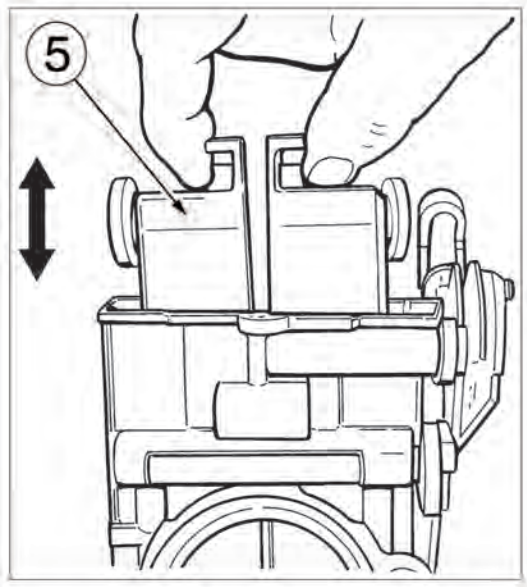

THROTTLE VALVE
Check for free movement.
Stick: Repair or replace.
Insert the throttle valve (5) into the carburetor body, and check for free movement.

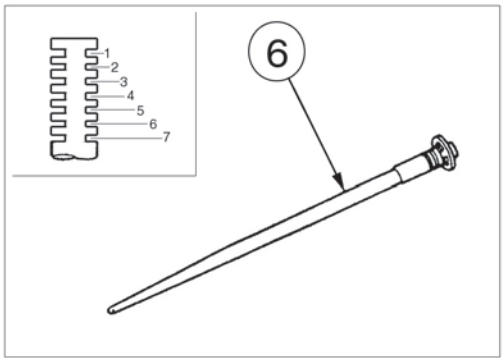

JET NEEDLE
Inspect jet needle (6).
Bends/Wear: Replace.
Standard clip position: 4th Groove.

FLOAT HEIGHT
Measure:
- Float height (a).
Out of specification: Adjust.
Float height: 8 mm (0.31 in.)
Measurement and adjustment steps:
- Hold the carburetor in an upside down position.
NOTE:
- Slowly tilt the carburetor in the opposite direction, then take the measurement when the needle valve aligns with the float arm.
- If the carburetor is level, the weight of the float will push in the needle valve, resulting in an incorrect measurement.
- Measure the distance between the mating surface of the float chamber and top of the float using a vernier calipers.
NOTE:
The float arm should be resting on the needle valve, but not compressing the needle valve.
- If the float height is not within specification, inspect the valve seat and needle valve.
- If either is worn, replace them both.
- If both are fine, adjust the float height by bending the float tab (b) on the float.
- Recheck the float height.

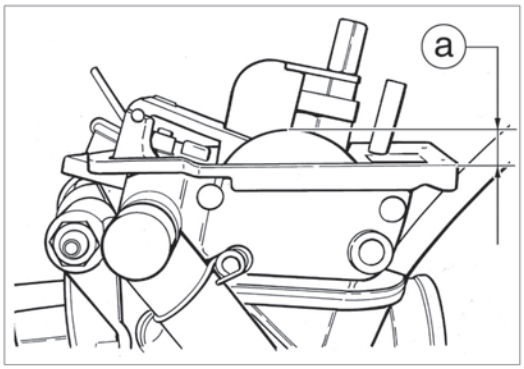

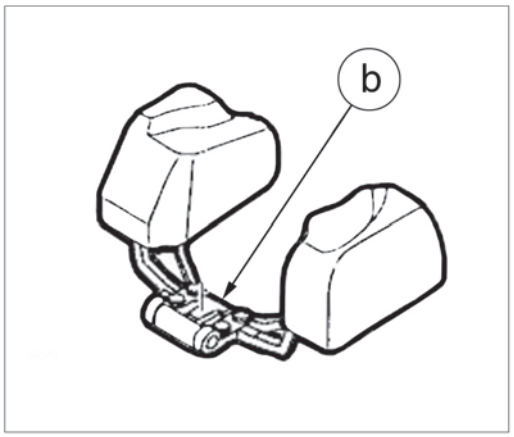

FLOATER
Inspect:
- Float (10).
Damage: Replace.

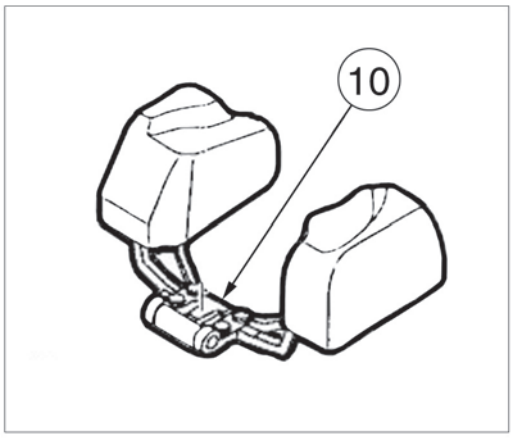

ACCELERATOR PUMP
Inspect:
- Diaphragm (accelerator pump 11) (a).
- Spring (b).
- Cover (c).
Tears (diaphragm) / Damage ® Replace.

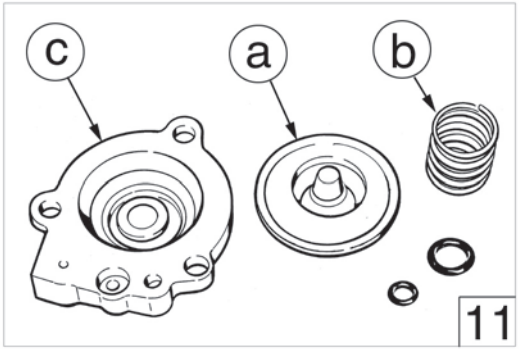

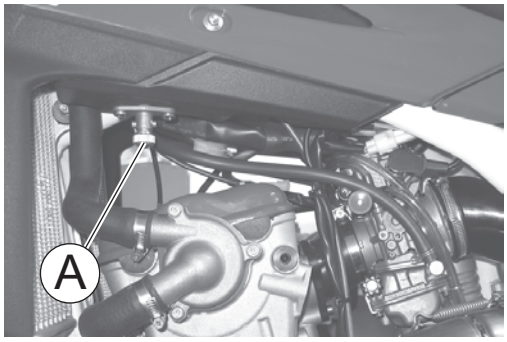

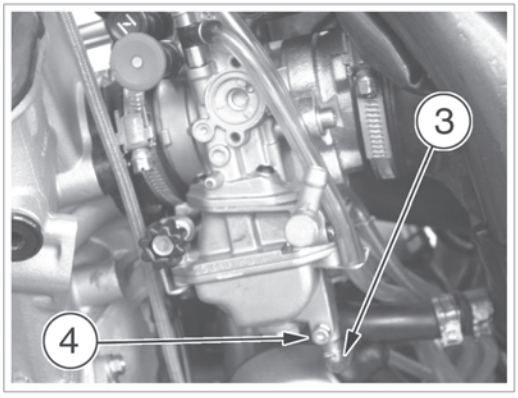

Fuel draining (TC 450-510; TXC 250-450-510)
As the fuel has to be drained from the float chamber, close the fuel tap by tightening the ring nut (A). Place the hose (3) in a vessel, loosen the drain screw (4) on the float chamber lower side, then tighten the screw again after the fuel drain.

WARNING
Never litter the environment with fuel, and let the engine running in open air, never in closed rooms.

Section H

General directions H.3
Instructions for assembly and lubrication ..... H.4÷H.13
Reassembly of crankshaft H.14
Reassembly of counter balancing shaft driving gear (SMR 450-510) H.16
Reassembly of transmission (TE-TXC-SMR) H.17
Reassembly of transmission (TC) H.18
Reassembly of crankcase H.20
Reassembly of gearshift mechanism, electric starting system and oil pump H.24
Reassembly of gear lever shaft H.25
Reassembly of kick start components (TE-TC-TXC) ... H.26
Reassembly of clutch (TE-TXC-TC; SMR 450-510) .. H.27
Reassembly of timing system drive gear and chain ... H.29
Reassembly of flywheel H.30
Reassembly of transmission cover H.31
Reassembly of piston and cylinder H.32
Reassembly of cylinder head H.33
Reassembly of cam-chain tensioner (TE-TC-TXC-SMR) ... H.36
Reassembly of valve lifter H.37
Reassembly of cylinder head cover, spark plug, lubrication hose H.39
Reassembly of gear shift position sensor H.39
Reassembly of flywhel cover H.40
Reassembly of the gearshift pedal and kick start pedal (TC-TE-TXC) H.41
Reassembly of the engine oil filters and drain plug H.41
Engine and motorcycle reassembly H.42
Cylinder head gasket selection chart H.44

General directions

For a correct re-assembly follow in the adverse sense what shown for dismantling, however paying a special attention to every operation we specifically mention. We remind you that gaskets, oil rings, clamps and sealing washer in deformable material (as copper, aluminium, fibers, etc.) and self-locking nuts havealways to be renewed. Bearings have been studied and drawn for a well determined number of working hours. It is advisable to replace those bearings which undergo the greatest wear and tear especially in view of the fact that generally speaking they are difficult to check for wear. What above is suggested in addition to the size verification of the single components, as foreseen in the proper chapter (see chapter G “ENGINE OVERHAULING”). We emphasize the importance of thoroughly cleaning all components; bearings and all particulars subject to wear have to be lubricated with engine oil, before re-assembly. Screws and nuts must be locked at the prescribed torques (see pages H.4÷H.13 and chapter X "TIGHTENING TORQUES").

Instructions for assembly and lubrication

CRANKSHAFT, COUNTER BALANCING SHAFT- ALTERNATOR- LUBRICATION- L.H. CRANKCASE

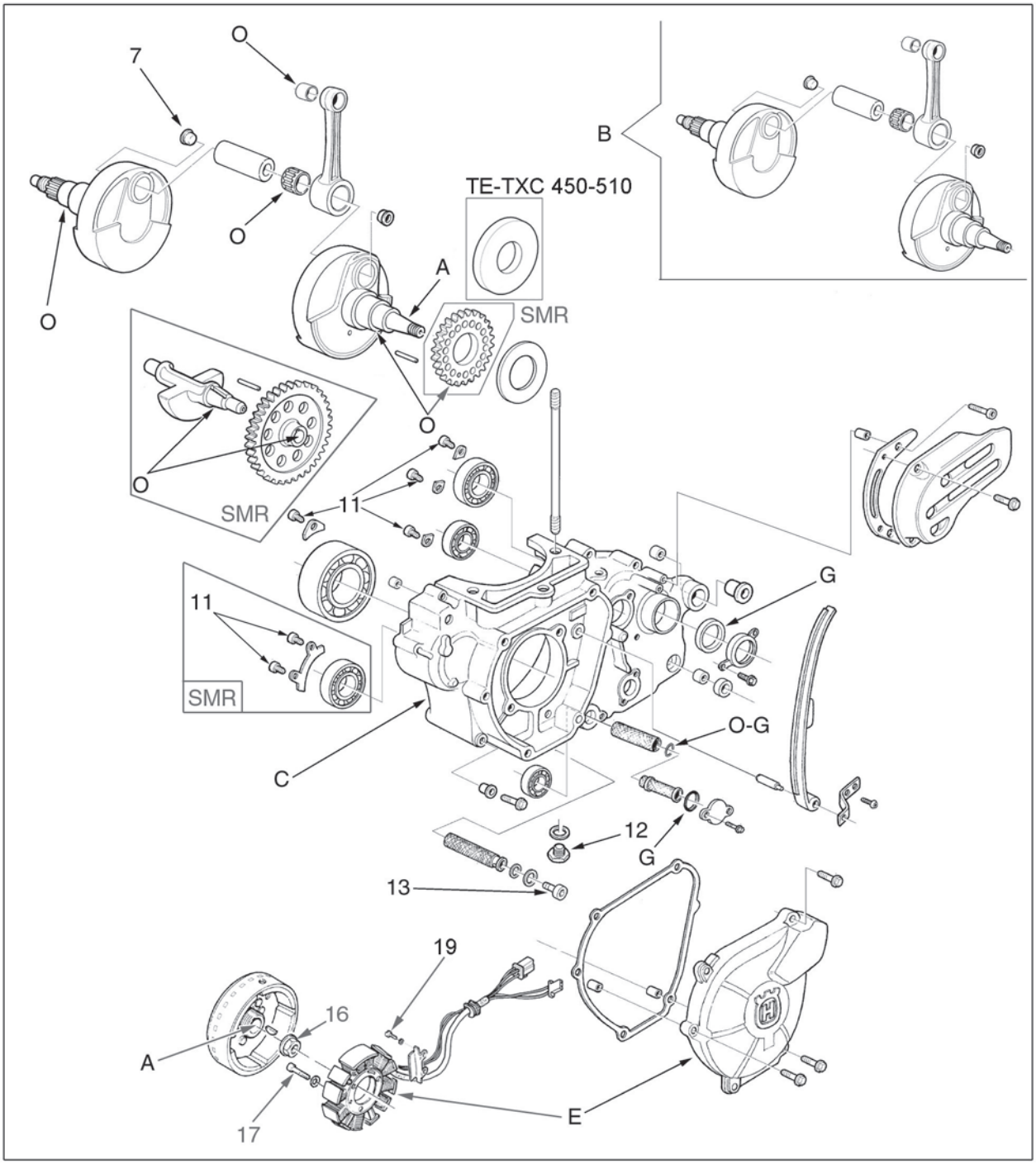

Tightening torques

7	M14x1 (+LOCTITE 243)	20 Nm- 2 Kgm- 14.5 ft/lb
11	M6x1	11 Nm- 1,1 Kgm- 7.9 ft/lb
12	M16x1,5	25 Nm- 2,55 Kgm- 18.4 ft/lb
13	M14x1,5	25 Nm- 2,55 Kgm- 18.4 ft/lb
16	M12x1	75 Nm- 7,65 Kgm- 55.3 ft/lb
17	M6x1 (+LOCTITE 272) - TC, TXC M5x0,8 (+LOCTITE 272) - TE, SMR	8 Nm- 0,8 Kgm- 5.8 ft/lb 6 Nm- 0,6 Kgm- 4.3 ft/lb
19	M5x0,8 (+LOCTITE 272)	6 Nm- 0,6 Kgm- 4.3 ft/lb

STANDARD	
M5x0,8	6 Nm- 0,6 Kgm- 4.3 ft/lb
M6x1	8 Nm-0,8 Kgm- 5.8 ft/lb
M8x1,25	21 Nm- 2,1 Kgm- 15.5 ft/lb

LUBRICATING POINTS-NOTES	LUBRICANT-INSTRUCTIONS FOR ASSEMBLY
A	Degrease
B	Mount with Engine oil
C	Glue the two half casings by “Loctite 510" (Pianermetic)
E	Align the stator notch to the notch on the stator cover
G	Grease WATER RESISTANT
O	Engine oil
O/G	Engine oil or grease WATER RESISTANT

Instructions for assembly and lubrication

TRANSMISSION, GEARSHIFT MECHANISM

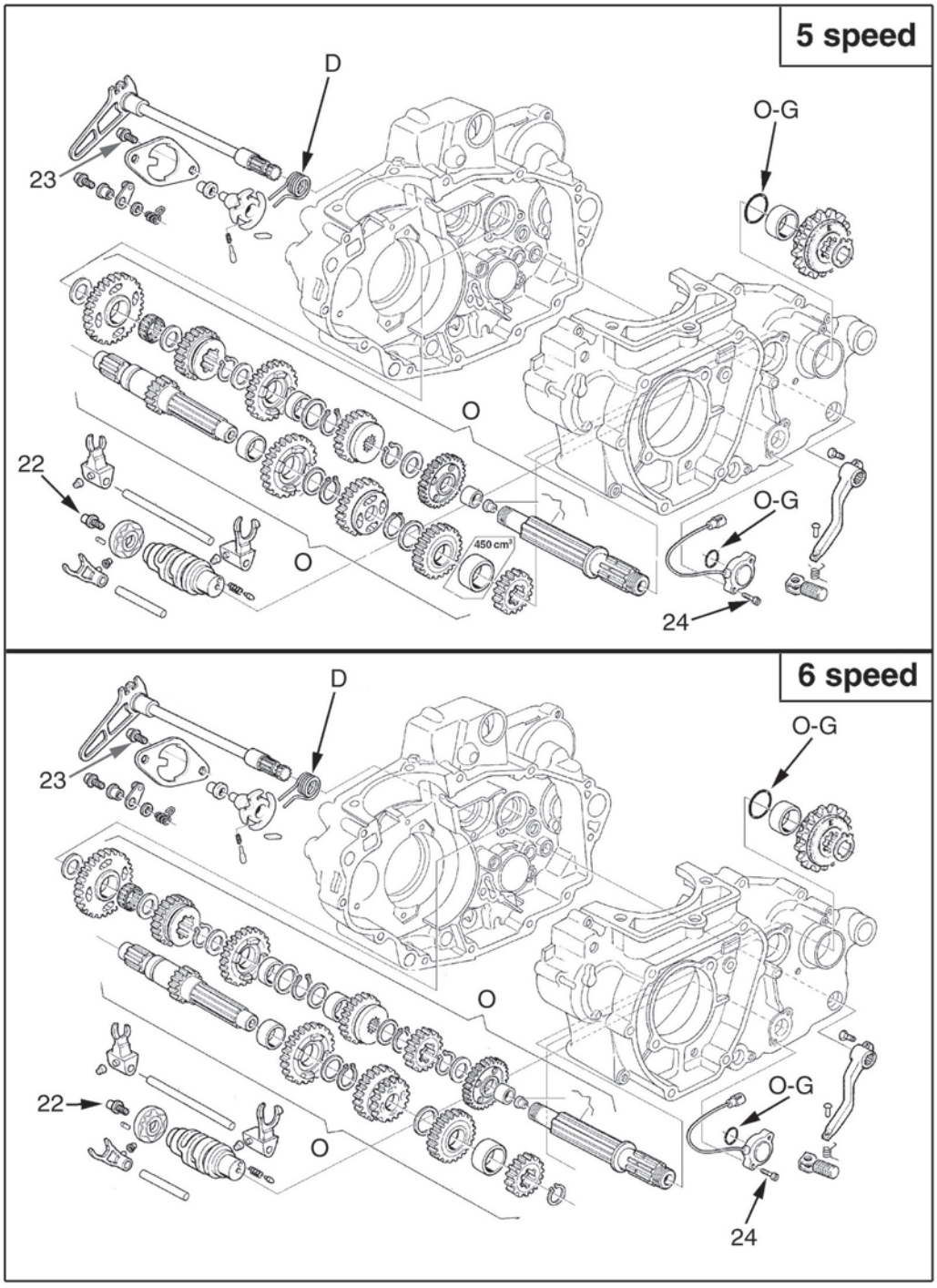

Tightening torques

22- M8x1,25 (+LOCTITE 270)	20 Nm- 2 Kgm- 14.5 ft/lb
23- M6x1 (+LOCTITE 243)	8 Nm- 0,8 Kgm- 5.8 ft/lb
24- M5x0,8	6 Nm- 0,6 Kgm- 4.3 ft/lb

STANDARD	
M5x0,8	6 Nm- 0,6 Kgm- 4.3 ft/lb
M6x1	8 Nm-0,8 Kgm- 5.8 ft/l
M8x1,25	21 Nm- 2,1 Kgm- 15.5 ft/lb

LUBRICATING POINTS-NOTES	LUBRICANT-INSTRUCTIONS FOR ASSEMBLY
D	Fit it with the opening towards the engine center
O	Engine oil
O/G	Engine oil or grease WATER RESISTANT

Instructions for assembly and lubrication

CLUTCH- STARTING SYSTEM- LUBRICATION- R.H. CRANKCASE

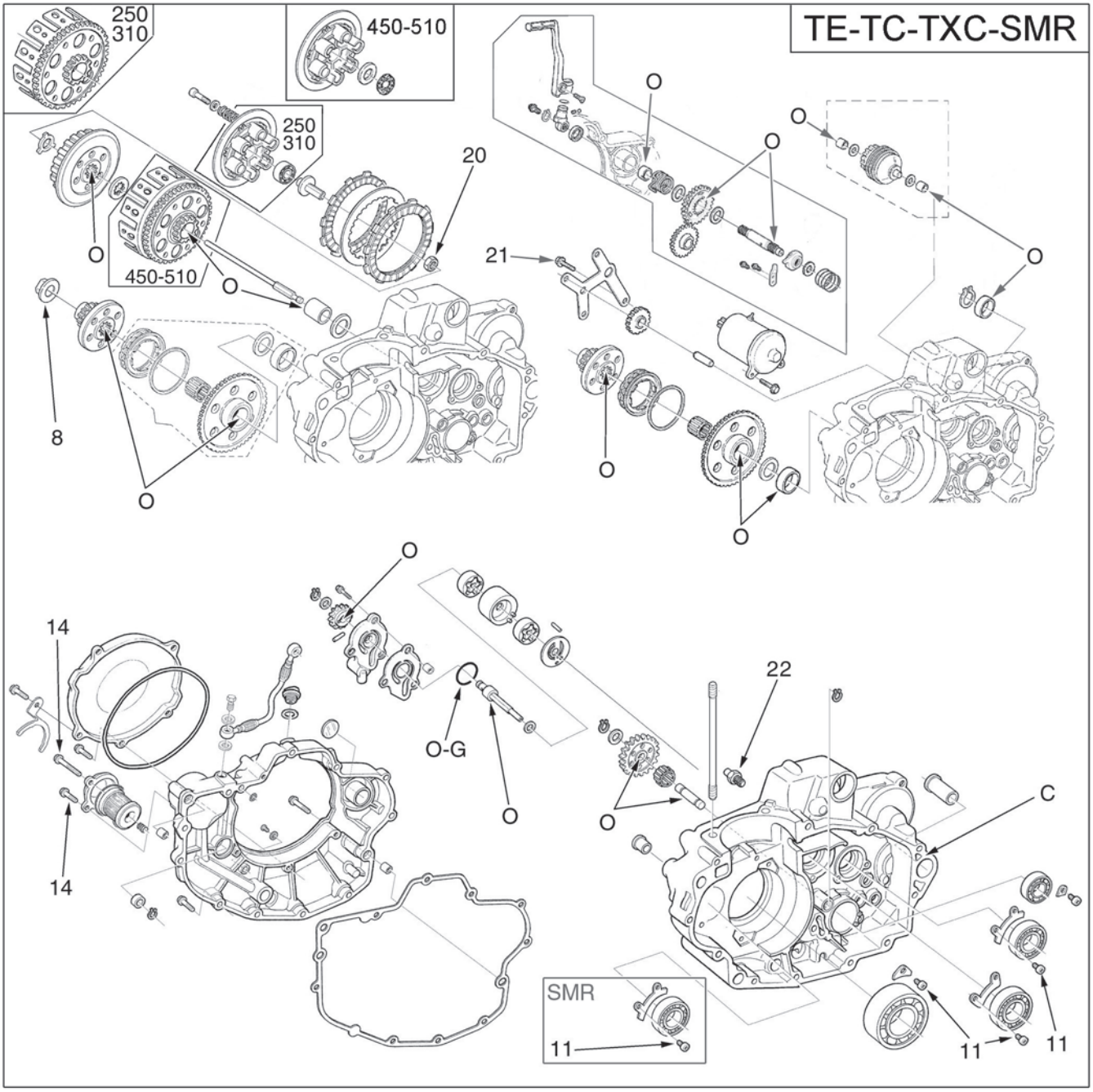

Tightening torques

8	M18x1,25	180 Nm- 18 Kgm- 130 ft/lb
11	M6x1 (+LOCTITE 272)	11 Nm- 1,1 Kgm- 7.9 ft/lb
14	M6x1	8 Nm- 0,8 Kgm- 5.8 ft/lb
20	M18x1	75 Nm- 7,6 Kgm- 55 ft/lb
21	M6x1 (+LOCTITE 243)	11 Nm- 1,1 Kgm- 7.9 ft/lb
22	M10x1,25 (+LOCTITE 601)	15 Nm- 1,5 Kgm- 10.8 ft/lb

STANDARD	
M5x0,8	6 Nm- 0,6 Kgm- 4.3 ft/lb
M6x1	8 Nm-0,8 Kgm- 5.8 ft/lb
M8x1,25	21 Nm- 2,1 Kgm- 15.5 ft/lb

LUBRICATING POINTS-NOTES	LUBRICANT-INSTRUCTIONS FOR ASSEMBLY
C	Glue the two half casings by “Loctite 510" (Pianermetic)
O	Engine oil
O/G	Engine oil or grease WATER RESISTANT

Instructions for assembly and lubrication

CLUTCH- STARTING SYSTEM- LUBRICATION- R.H. CRANKCASE

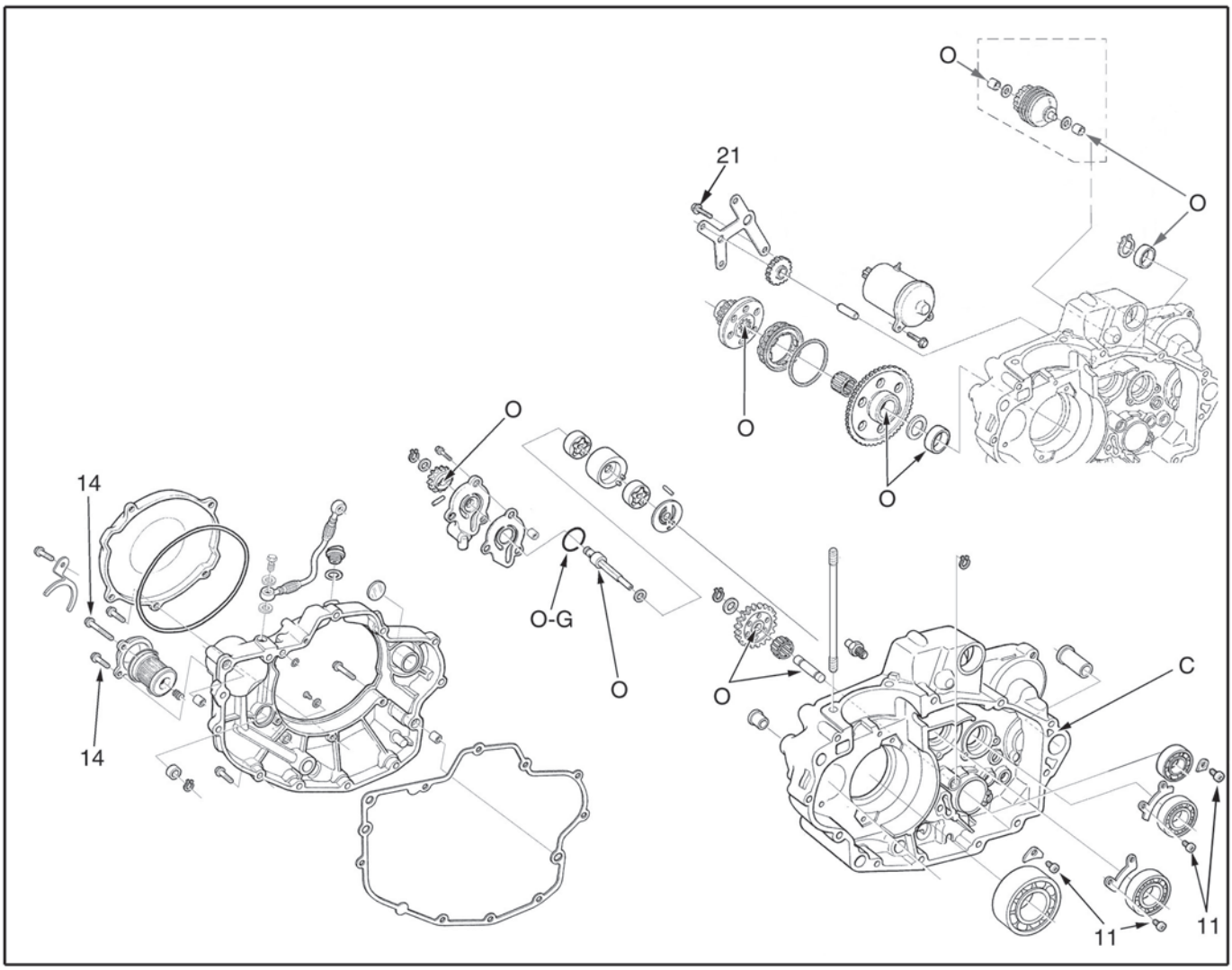

Tightening torques

8	M18x1,25	180 Nm- 18 Kgm- 130 ft/lb
11	M6x1 (+LOCTITE 272)	11 Nm- 1,1 Kgm- 7.9 ft/lb
14	M6x1	8 Nm- 0,8 Kgm- 5.8 ft/lb
20	M18x1	75 Nm- 7,6 Kgm- 55 ft/lb
21	M6x1 (+LOCTITE 243)	8 Nm- 0,8 Kgm- 5.8 ft/lb

STANDARD	
M5x0,8	6 Nm- 0,6 Kgm- 4.3 ft/lb
M6x1	8 Nm-0,8 Kgm- 5.8 ft/lb
M8x1,25	21 Nm- 2,1 Kgm- 15.5 ft/lb

LUBRICATING POINTS-NOTES	LUBRICANT-INSTRUCTIONS FOR ASSEMBLY
C	Glue the two half casings by “Loctite 510" (Pianermetic)
O	Engine oil
O/G	Engine oil or grease WATER RESISTANT

Instructions for assembly and lubrication

CYLINDER HEAD - CYLINDER - PISTON - TIMING SYSTEM - WATER PUMP - SPARK PLUG

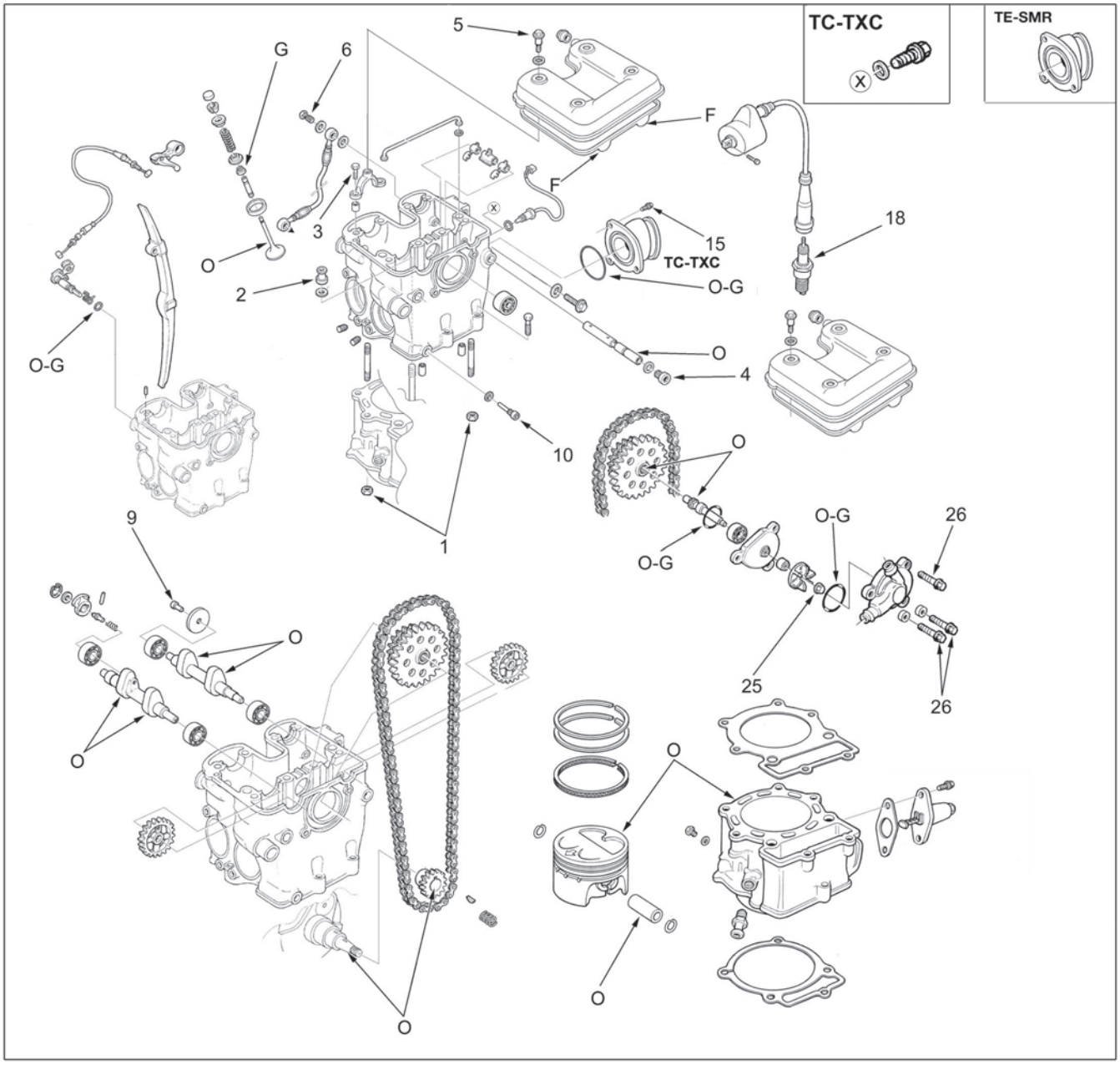

Tightening torques

1	M8x1,25	15 Nm- 1,5 Kgm- 10.8 ft/lb
2	M10x1,5 (+MOLIKOTE HSC)	37 Nm+90°- 3.8 Nm+90°- 27.5 ft/lb+90°
3	M6x1	12 Nm- 1,2 Kgm- 8.7 ft/lb
4	M14x1,5 (+LOCTITE 243)	25 Nm- 2,55 Kgm- 18.4 ft/lb
5	M6x1	8 Nm- 0,8 Kgm- 5.8 ft/lb
6	M10x1	15 Nm- 1,5 Kgm- 10.8 ft/lb
9	M6x1 (+LOCTITE 243)	8 Nm- 0,8 Kgm- 5.8 ft/lb
10	M8x1,25	10÷12 Nm- 1÷1,23 Kgm- 7.2÷8.9 ft/lb
15	M4x0,7 (+LOCTITE 272)	3 Nm- 0,3 Kgm- 2.2 ft/lb
18	M10x1	12 Nm- 1,23 Kgm- 8.9 ft/lb
25	M5x0,8 (+LOCTITE 243)	4,9 Nm- 0,5 Kgm- 3.6 ft/lb
26	M6x1(+LOCTITE 542)	8 Nm- 0,8 Kgm- 5.8 ft/lb
27	M14x1,5 (+LOCTITE 542)	25 Nm- 0,25 Kgm- 18.4 ft/lb
29	M10x1,25 (TE-SMR)	5 Nm- 0,5 Kgm- 3.6 ft/lb
29	M10x1,25 (TC-TXC)	8 Nm- 0,8 Kgm- 5.8 ft/lb
43	M5x0,8 (+LOCTITE 243) Excluded USA model	5 Nm- 0,5 Kgm- 3.6 ft/lb

STANDARD	
M5x0,8	6 Nm- 0,6 Kgm- 4.3 ft/lb
M6x1	8 Nm-0,8 Kgm- 5.8 ft/lb
M8x1,25	21 Nm- 2,1 Kgm- 15.5 ft/lb

LUBRICATING POINTS-NOTES	LUBRICANT-INSTRUCTIONS FOR ASSEMBLY
F	Fit using “AREXONS RHODORSEAL 5552” seal
G	Grease WATER RESISTANT
O	Engine oil
O/G	Engine oil or grease WATER RESISTANT

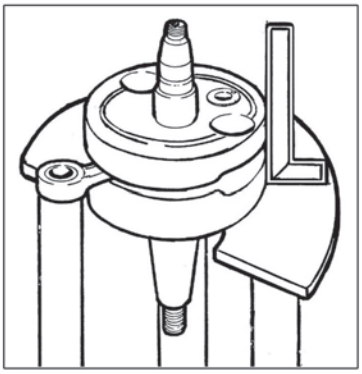

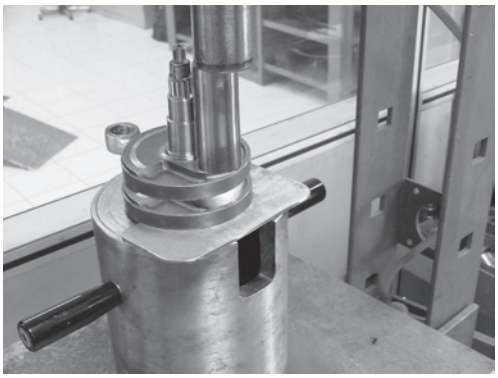

Reassembly of crankshaft

Carefully clean the lubrication ducts. Lubricate the crankpin with motor oil and place it in the flywheel.

Fit the roller bearing and lubricate with engine oil. Fit the connecting rod and the second half-flywheel. See that the half-flywheels are aligned using a triangle.

Join all the elements using a press.

Press the crank discs together to the same distance as the length of the crankpin. Respect measure “B” shown on page H.15 when fitting the coupling pin.

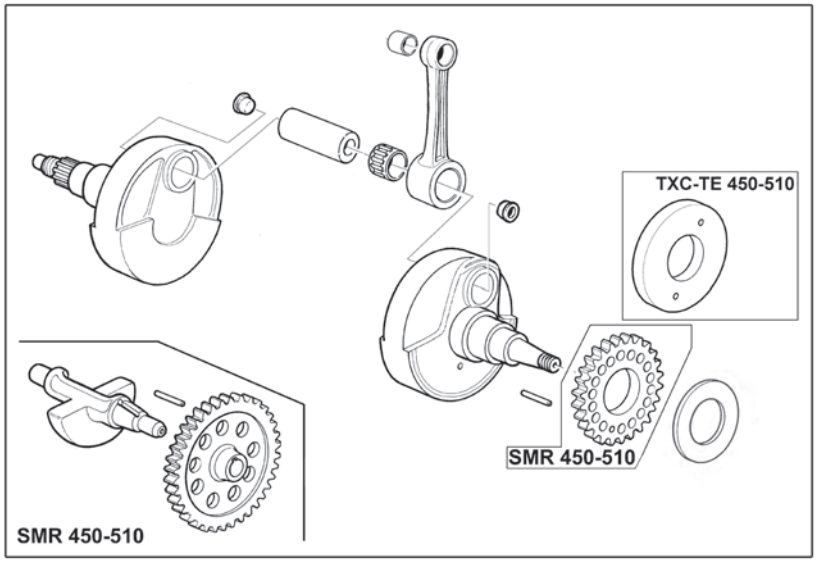

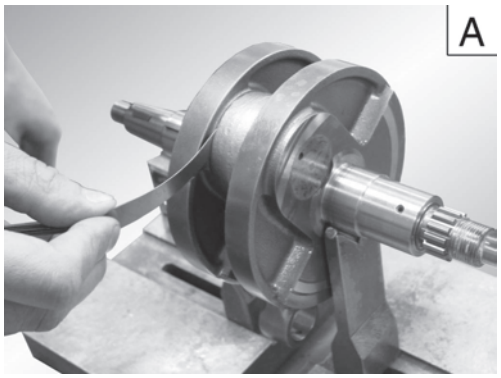

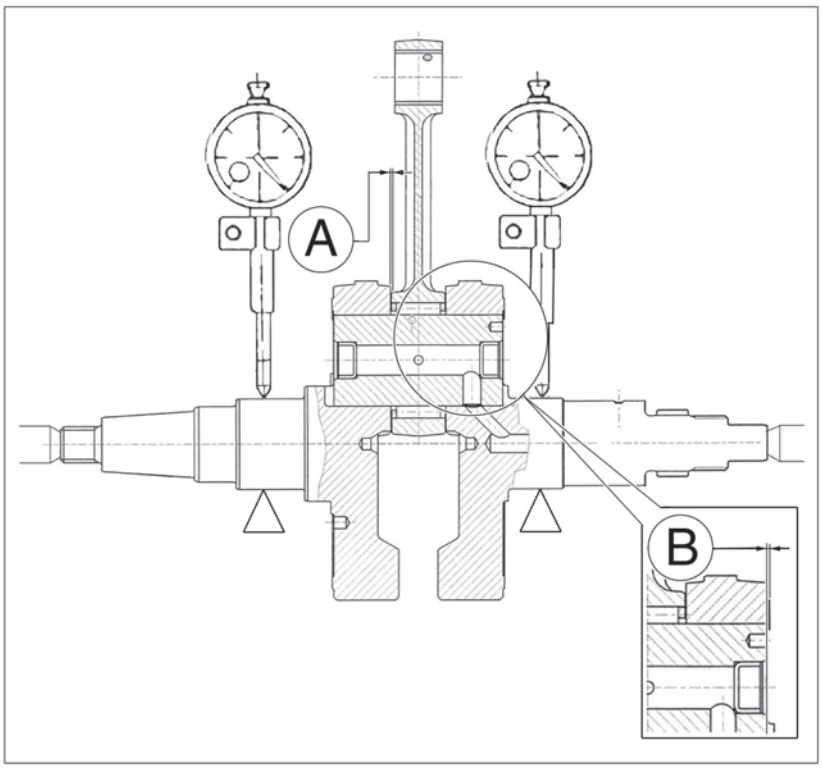

Check the connecting rod side float into the flywheels. It must be 0,4÷0,5 mm (0.0157÷0.0197 in).
Check the alignment of the crankshaft between centers.
Runout may not exceed 0.02 mm (0.0008 in) at the bearing positions.
Make an initial alignment of the flywheel using a copper hammer.

A = 0,4 ÷ 0,5 mm
(0,0157÷0,0197 in.)

B = 0,5 mm (0,02 in.)
Aligned with half-flywheel

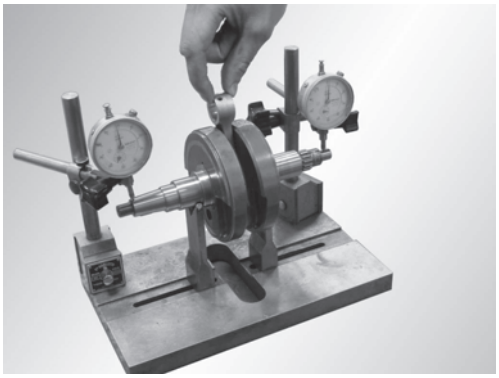

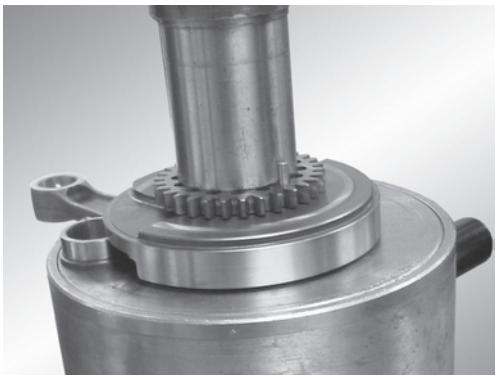

Reassembly of counter balancing shaft driving gear (SMR 450-510)
Put the flywheel on the press as shown in picture (with the left half-flywheel surface on the press plane) and assemble the layshaft driving gear (2) on the flywheel (use a 4 mm - 0.16 in. pin (1) for correct assembly as shown in the picture). Remove pin after assembly.

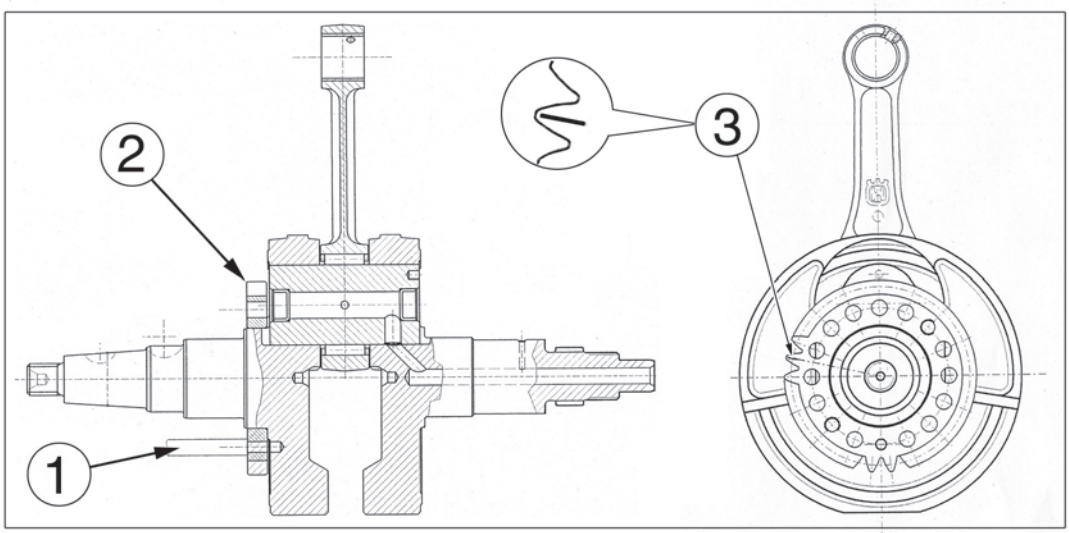

REFERENCE (3) OUTWARD

Using a depth slide gauge, measure height “B” between the bearing and joint face on the two crankcase halves. Measure width “A” of the crankshaft. Taking into account that the play between crankshaft and base has to be 0.4 mm - 0,0157 in., shim washer “C” thickness to be used is given by difference:

C=[“B” (on both sides)] - (“A” + 0.4 mm)

Shim washers are available in the following thicknesses:

0,3 mm - 0.0118 in.(code no.: 8A0028183)
0,5 mm - 0.0197 in.(code no.: 8C0028183)
0,6 mm - 0.0236 in.(code no.: 8D0028183)
0,8 mm - 0.0315 in.(code no.: 8F0028183)
1,0 mm - 0.0394 in.(code no.: 8H0028183)

* On L.H. Side

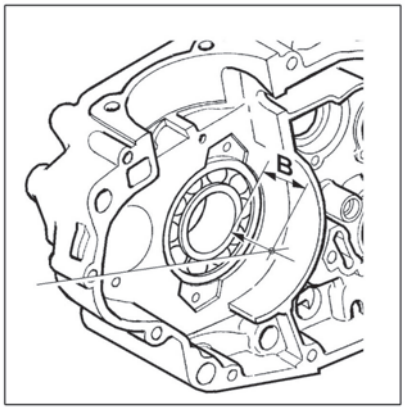

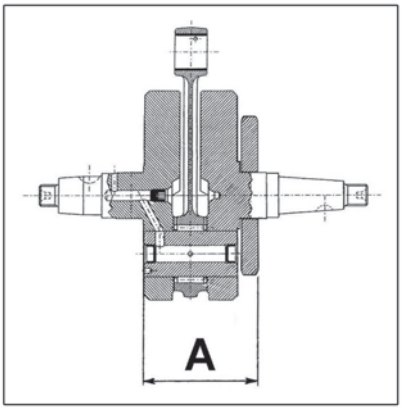

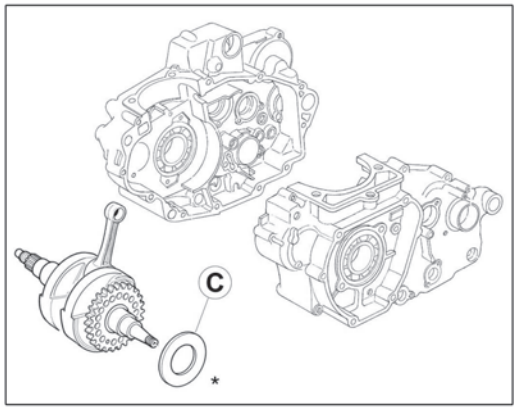

Reassembly of transmission
If the gear shafts have been disassembled, the following paragraphs show the reassembly sequence.

6 Speed transmission (TE, TXC, SMR)

Main shaft

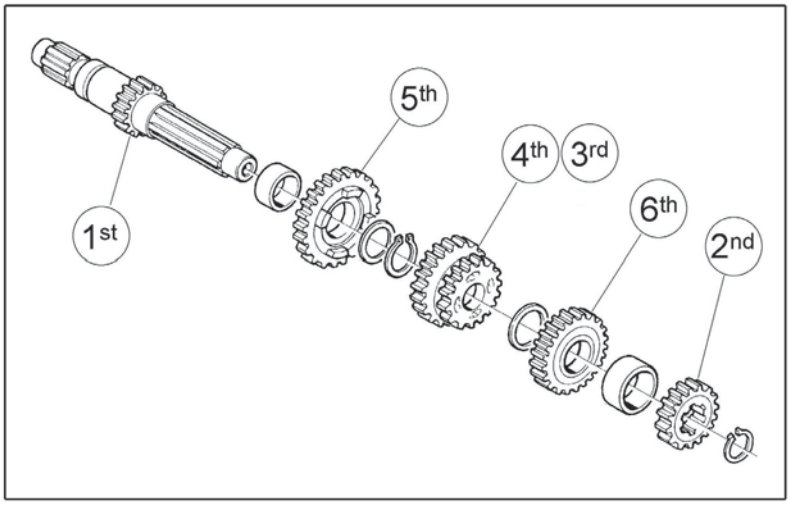

Auxiliary shaft

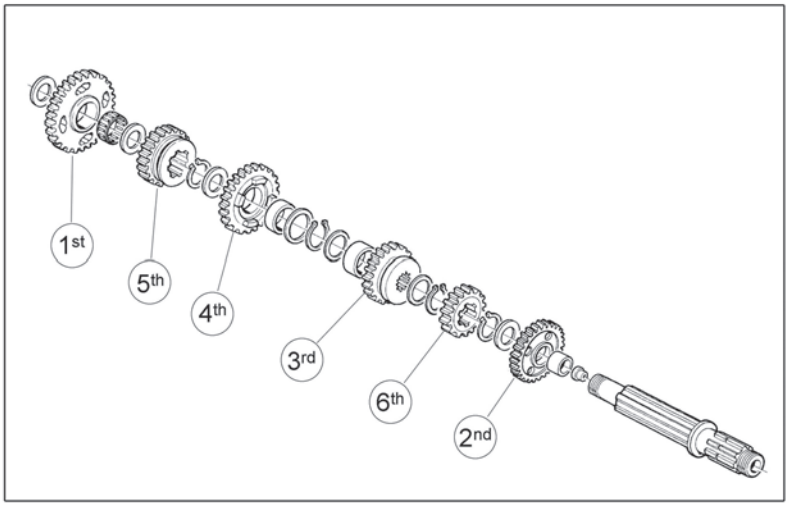

Main shaft
Mount the bushing, the 5th gear on the bushing and after that the washer and the circlip. The washer should be between the gear and the circlip. Mount the 3rd-4th gear and after that, the washer. Mount 6th gear and the steel spacer. Mount 2nd gear and the circlip.

A: 5th gear engaged

B: 6th gear engaged

C: 6th gear aligned with shaft broaching

D: lubricate at the assembly with MOLYKOTE G-n plus

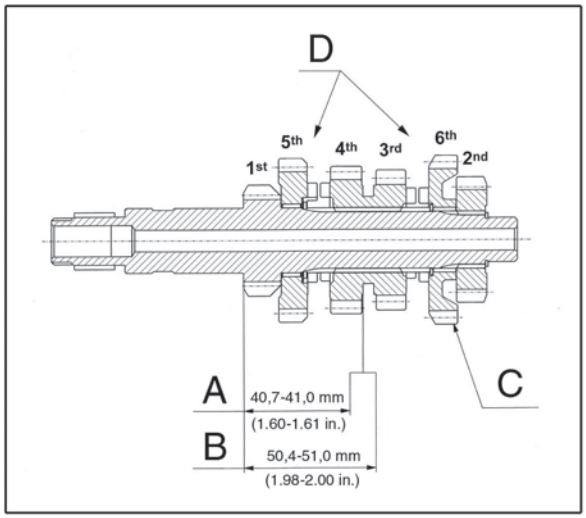

Auxiliary shaft

Mount the plug and the bush. Mount 2nd gear, the washer and the circlip. Mount the 6th gear and the circlip. Mount the washer. Fit the washer into the 3rd gear. Mount the 3rd gear, the washer and the circlip. Apply “MOLYKOTE G-n plus” under 3rd gear. Mount the washer. Fit the bush into the 4th speed gear. Mount the 4th speed gear, the washer and the circlip. Apply “MOLYKOTE G-n plus” under 4th gear. Mount 5th gear and the washer. Mount the needle bearing, the 1st speed gear and the washer.

Auxiliary shaft complete

A: 1sh gear engaged

B: 4th gear engaged

C: 3rd gear engaged

D: 6th gear engaged

E: 1st gear aligned with shaft broaching

F: lubricate at the assembly with MOLYKOTE G-n plus

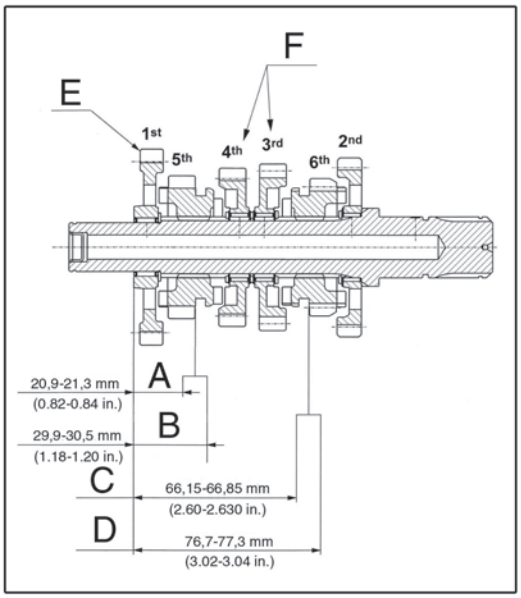

5 Speed transmission (TC)

Main shaft

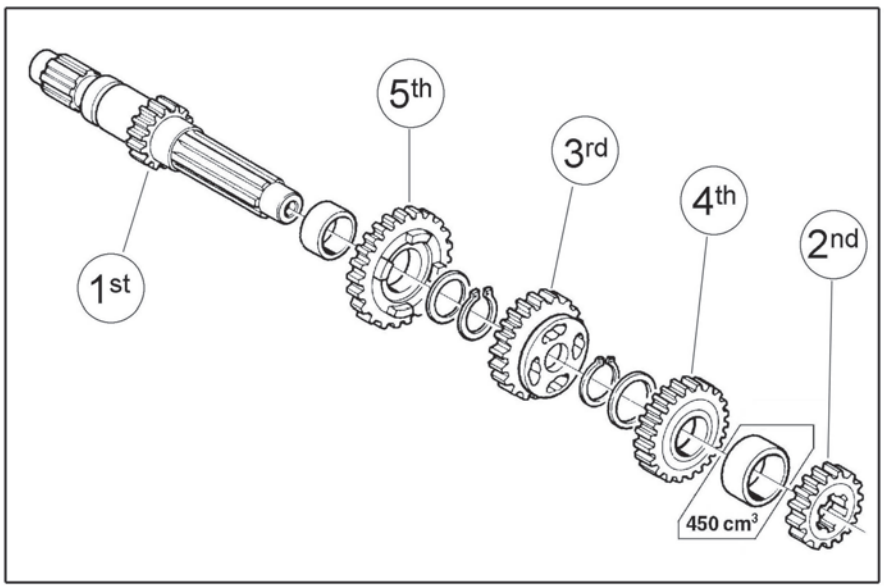

Auxiliary shaft

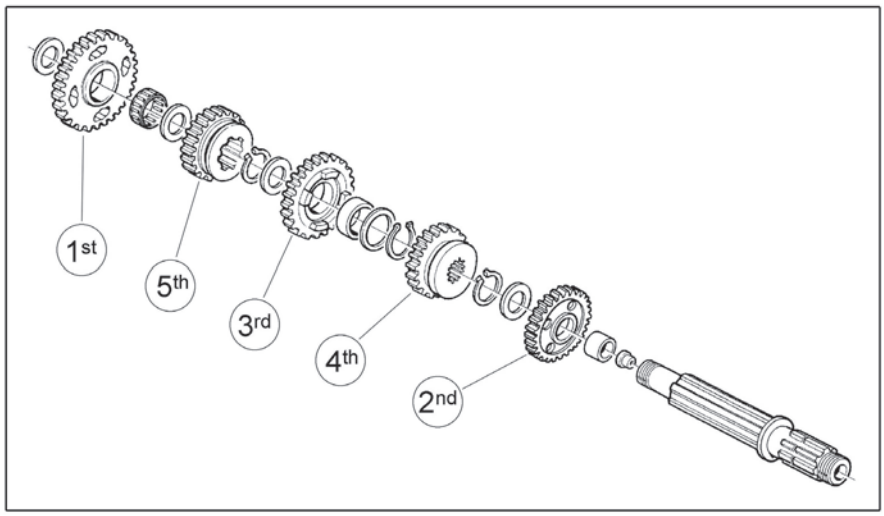

Main shaft complete

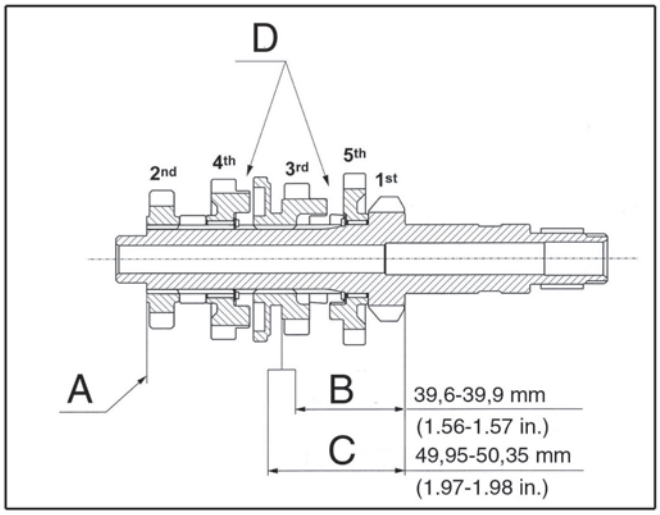

Main shaft
Mount the bushing, the 5th gear on the bushing and after that the washer and the circlip. The washer should be between the gear and the circlip. Mount the 3rd gear, the circlip and the washer. Mount the 4th gear. Mount the spacer (only for 400-450-510 cc). Mount 2nd gear.

A: 2nd gear aligned with shaft broaching

B: 5th gear engaged

C: 4th gear engaged

D: lubricate at the assembly with MOLYKOTE G-n plus

Auxiliary shaft complete

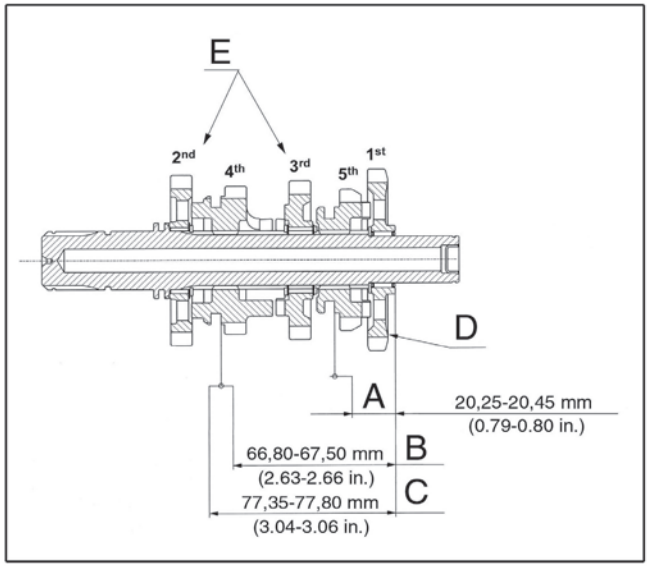

Auxiliary shaft
Mount the plug and the bush. Mount 2nd gear, the washer and the circlip. Mount the 4th gear and the circlip. Mount the washer.
Fit the washer and mount the 3rd gear into the bush. Mount the washer and the circlip. Apply “MOLYKOTE G-n plus” under 3rd gear.
Mount 5th gear and the washer. Mount the needle bearing, the 1st speed gear and the washer.

A: 1st gear engaged

B: 3rd gear engaged

C: 2nd gear engaged

D: 1st gear aligned with shaft broaching

E: lubricate at the assembly with MOLYKOTE G-n plus

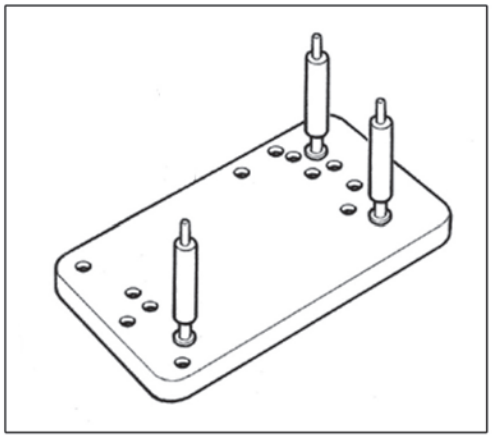

Reassembly of crankcase
Clean the faces between the half-cases then support the half-case using a suitable tool code no. 8A00 90662.

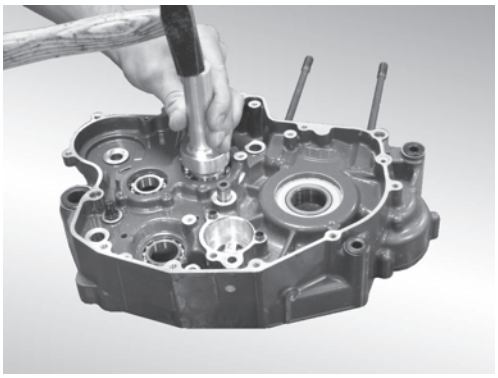

Warm up at approx. 125°C (257°F), and fit the ball bearings into the two half-cases with a suitable tool (crankcase bearings plates screws: 11Nm/ 1,1 Kgm/ 7.9 ft-lb + LOCTITE 272).

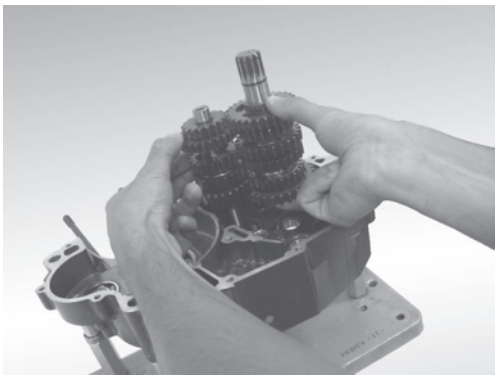

Install the two gearbox shafts as one unit.

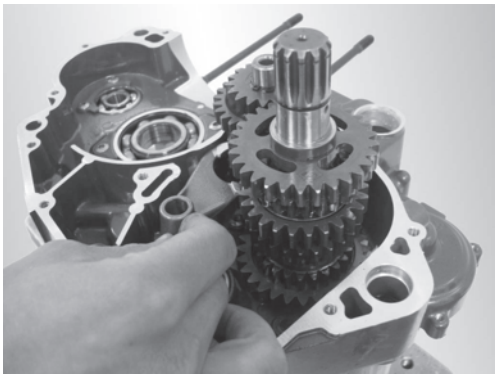

Install the three gear strikers.

Make sure that the mounting of the bushes is correct (apply grease on the bushes).

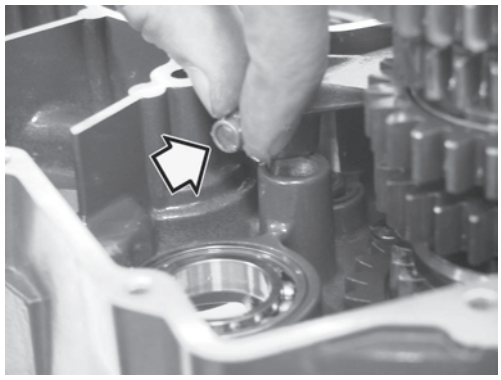

Lubricate with motor oil the surfaces that fit in the gear wheels.

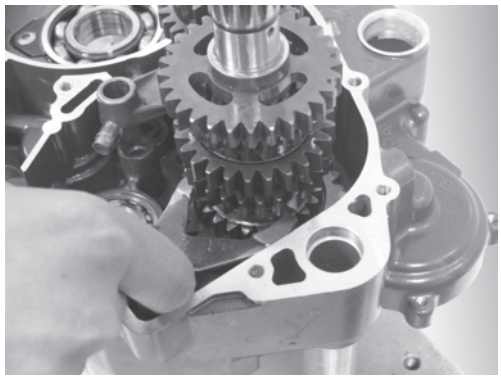

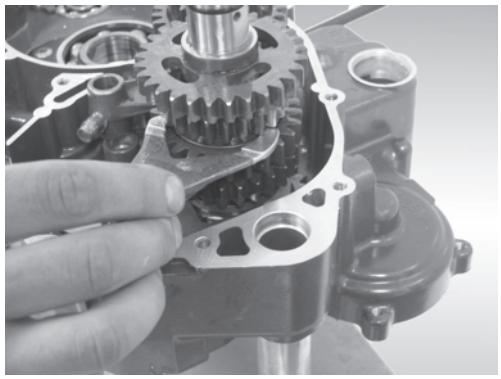

Put the selector drum in its place.

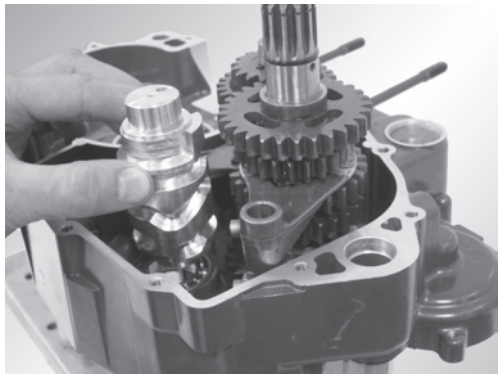

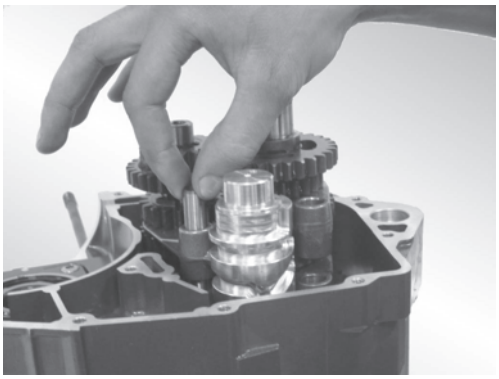

Install the gear striker shafts. Make sure that the gear strikers move easily on the shafts. Check gearbox operation by turning the gear selector drum.

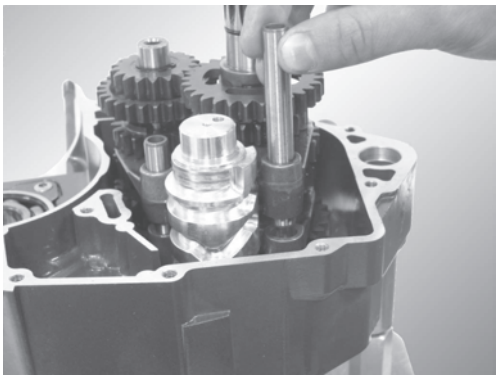

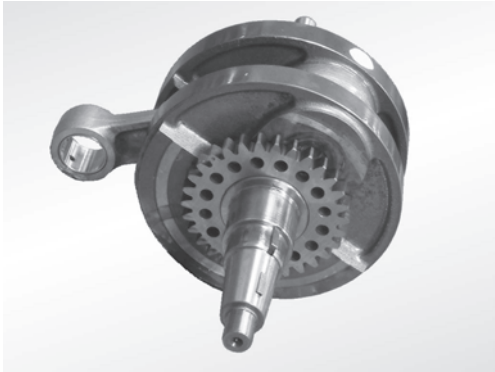

Lubricate with motor oil the crankshaft journal with grease and assemble the shaft in the right half-crankcase.

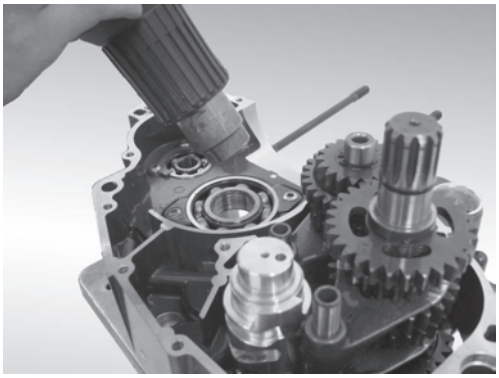

Warm the crankshaft ball bearings of the crankcase.

Mount contemporarily the crankshaft and the counter balancing shaft aligning the chasings on the gears (the contemporary assembling of the crankshaft and the counter balancing shaft is obligatory on 400-450-510models). Mount the distance washer on the crankshaft.

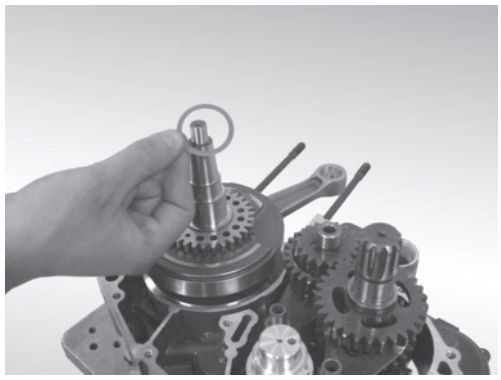

Smear the union surface of the left half case with “LOCTITE 510”;
warm the crankshaft bearing seat and fit the half case. In order to join the crankcase, by striking with a plastic hammer join the two halves. Tighten the allen bolts (8 Nm-0,8 Kgm-5.8 ft/lb).

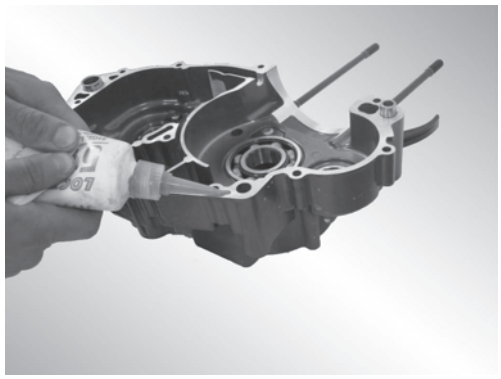

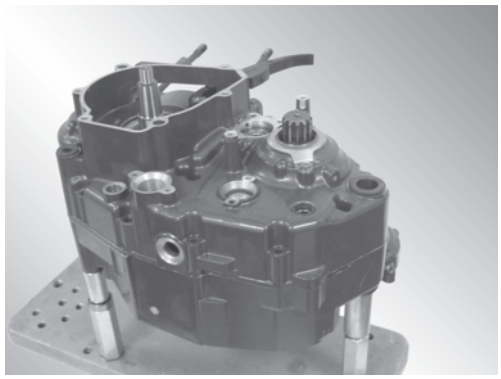

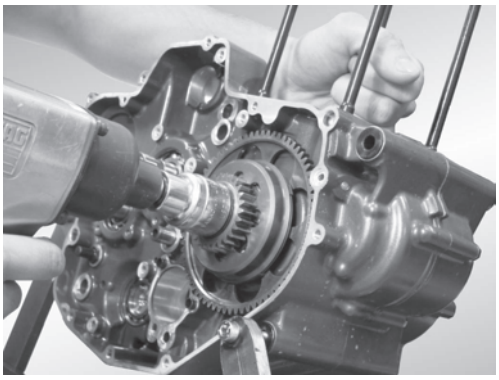

Reassembly of gearshift mechanism, electric starting system and oil pump
Assembly of the gearshift mechanism should be done in reverse order to disassembly.
Tighten the driving gear on the crankshaft to the required torque (180 Nm-18 Kgm-130 ft/lb + LOCTITE 243).
Mount the starting driven gear.
NOTE: reassemble the free wheel in accordance with the mark previously done, during disassembly.
Check the gears teeth for wear and failure. If worn or breaked, replace it.
Mout the second starting driven gear.
Mount the retaining plate (11 Nm-1,1 Kgm-7.9 ft/lb + LOCTITE 243).
Tighten the gear selector fixing pin (20 Nm-2 Kgm-14.5 ft/lb + LOCTITE 270), mount the gear fixing click and the relative spring. Mount the sprocket and fix the plate (8 Nm-0,8 Kgm-5.8 ft/lb + LOCTITE 243).

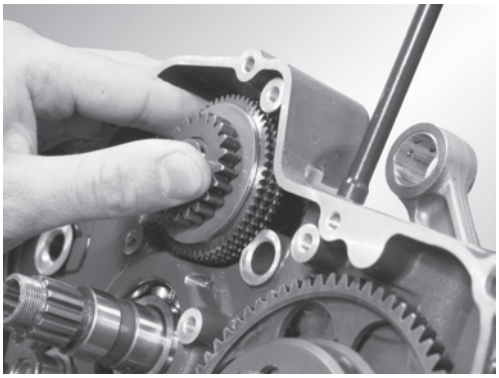

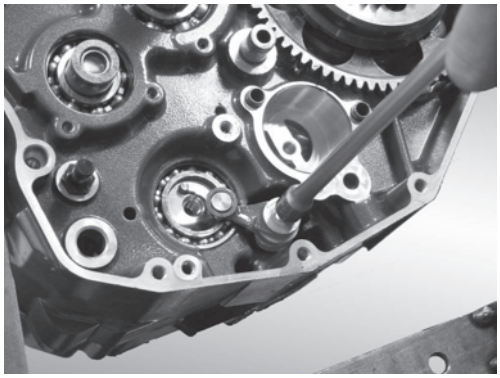

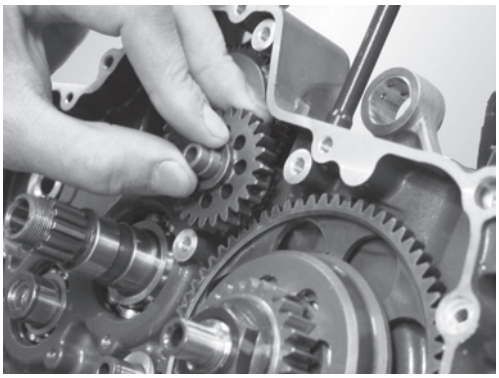

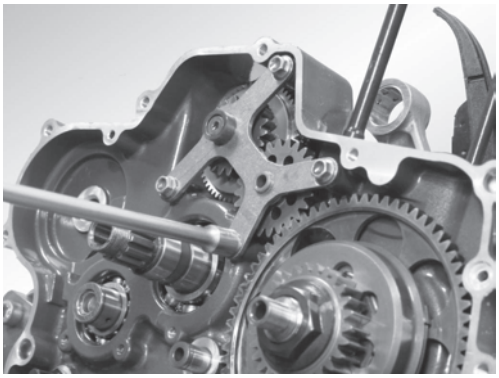

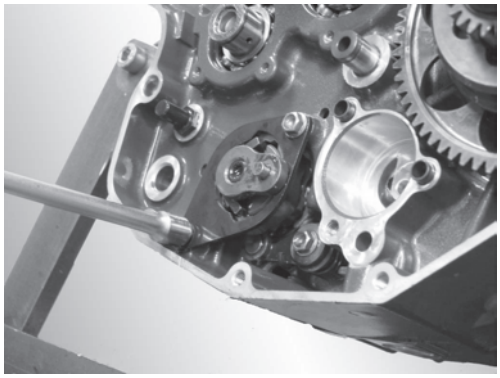

Mount the oil pump (8 Nm-0,8 Kgm-5.8 ft/lb). Mount the oil pump driven gear and the circlip. Mount the circlip on the auxiliary shaft.

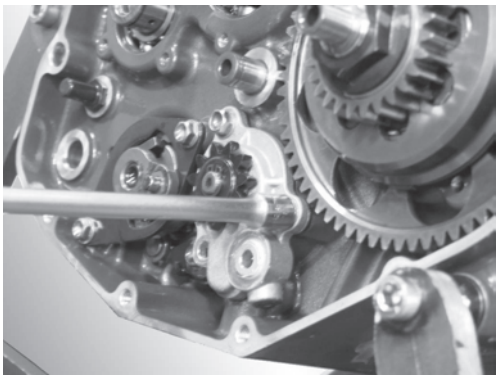

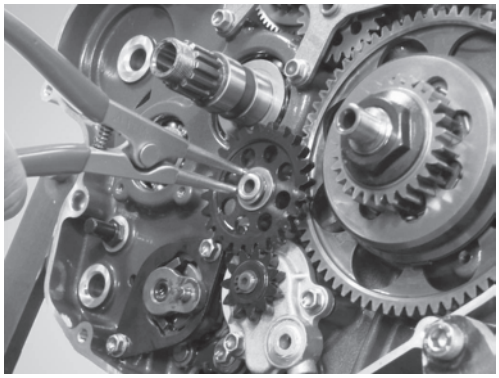

Reassembly of gear shaft
Check the shaft for wear in the gear shift mechanism groove.
Mount the spring and lubricate the shaft with motor oil. Insert the shaft in the crankcase in order to align the spring to the spring selector pin.

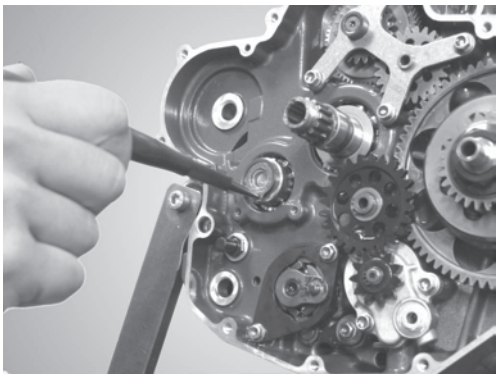

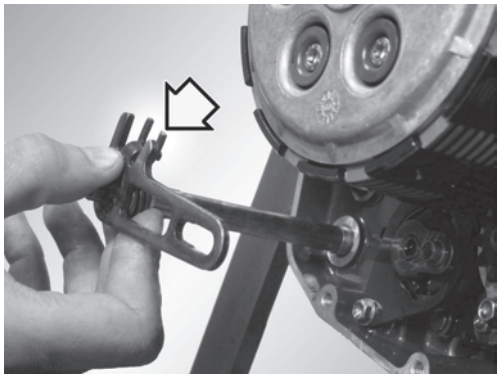

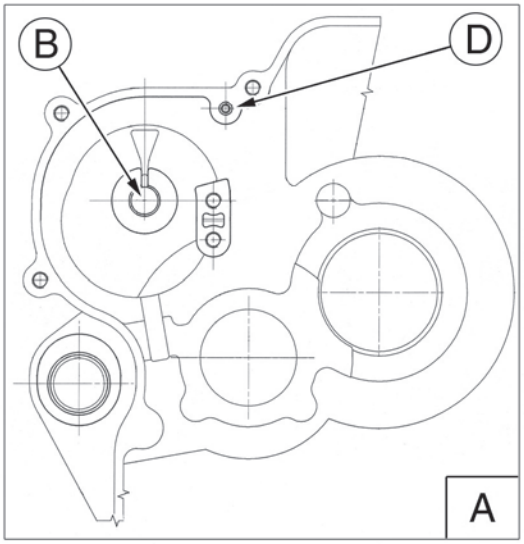

Reassembly of kick start components (TE-TC-TXC)
Assemble the shaft assy. (2) in the seat (B) on crankcase (A) then place the hook return spring (1) in the crankcase hole (D). Assemble idling gear (5), washer (4) and circlip (3).

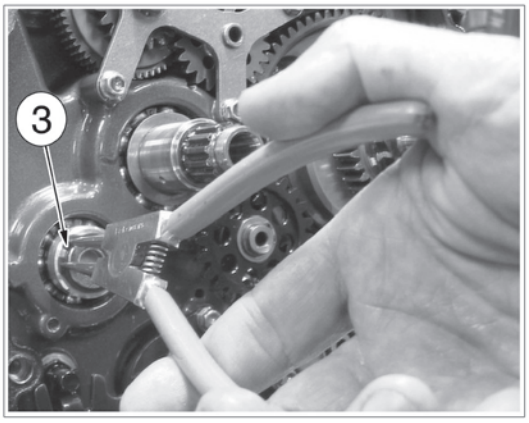

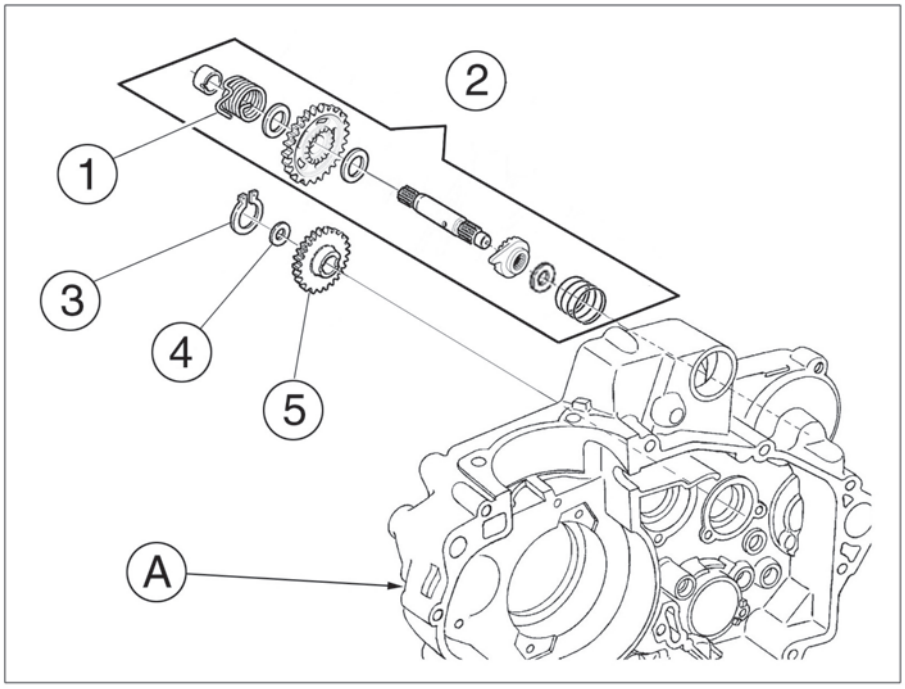

Reassembly of clutch (TE-TXC-TC; SMR 450-510)
Mount the washer (1), the bush (2) and the clutch housing (3).
Mount the toothed washer (4), the hub (5), the tab washer (6) and the nut (7).
Tighten the nut to the required torque (75 Nm-7,6 Kgm- 55 ft/lb; place an aluminium shim between the teeth of the primary drive gears, in order to prevent its rotation). Reassemble clutch discs (8) (mount the clutch plates starting with one of the lined driving discs followed by one of the driven discs; the last of the driving discs goes on last), clutch control cap (9), pressure plate (10) and springs (11). Tight the clutch springs screws (12) whilst following a cross-over pattern and in steps (8 Nm-0,8 Kgm- 5.8 ft/lb). Mount the clutch control rod (13).

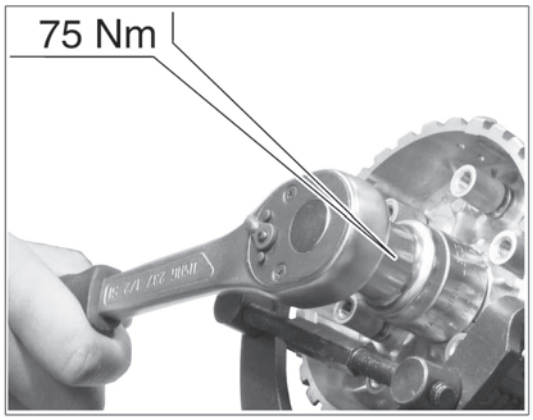

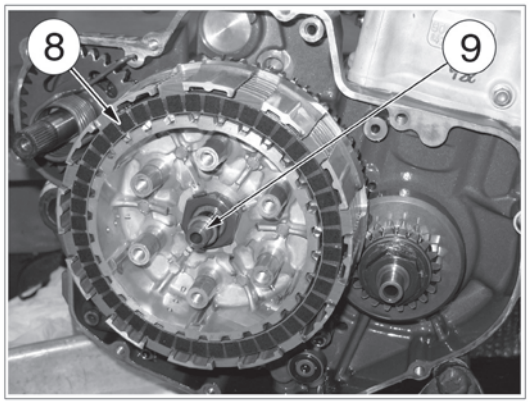

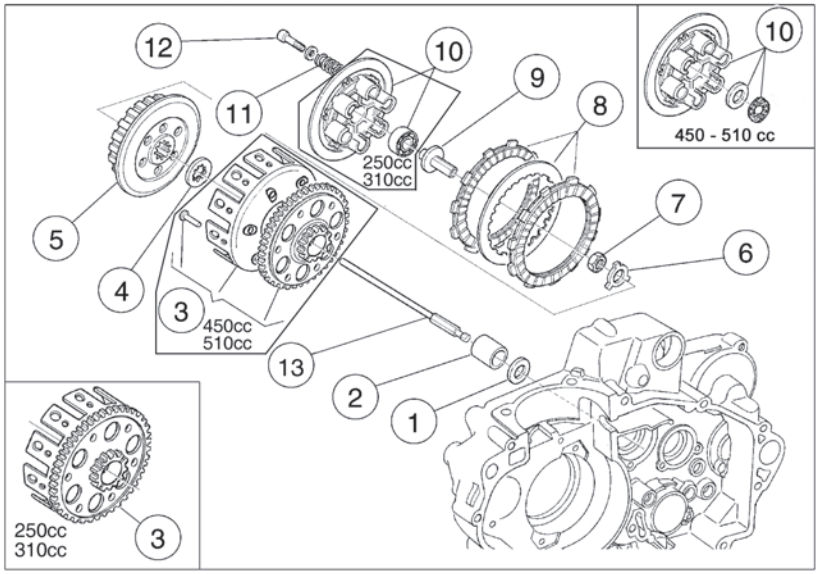

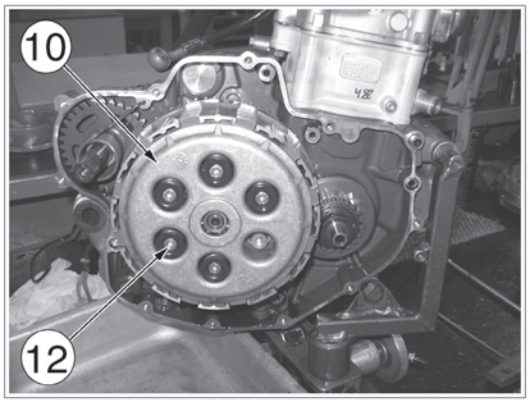

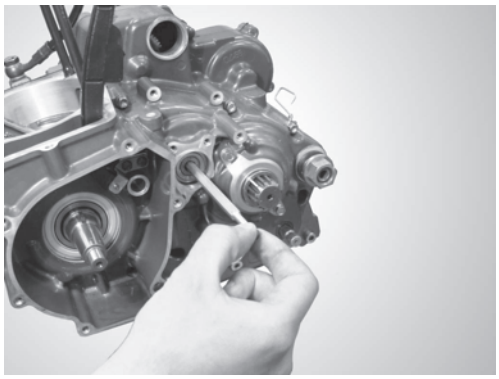

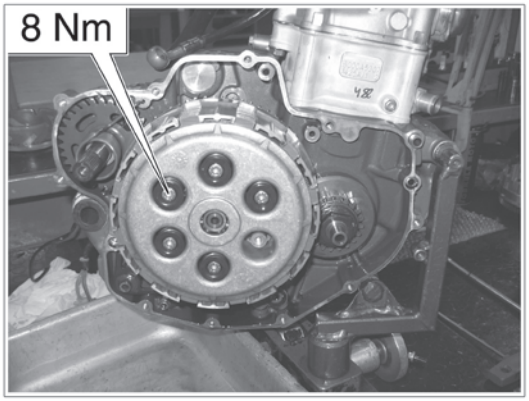

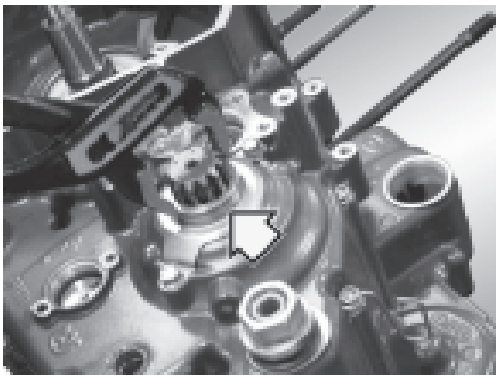

Reassemble the pinion spacer with the O-ring housing turned inwards.

: Be careful not to damage O-Ring on the spline shaft.

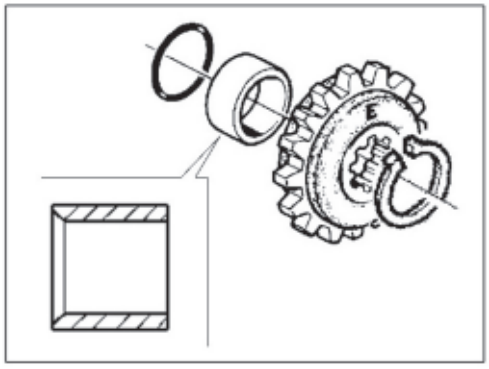

Mount the pinion and the circlip.

Reassembly of timing system drive gear and chain
The key for the cam chain sprocket must be installed with the cut end out towards the drive gear.

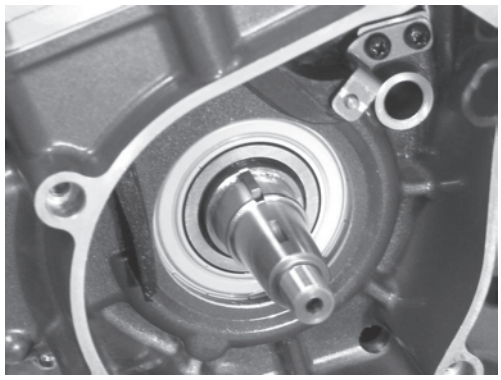

Lubricate the cam-chain sprocket and install it on the crankshaft using a drift.

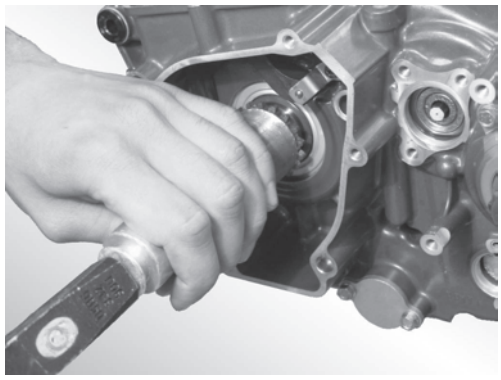

Reassemble the cam drive chain.

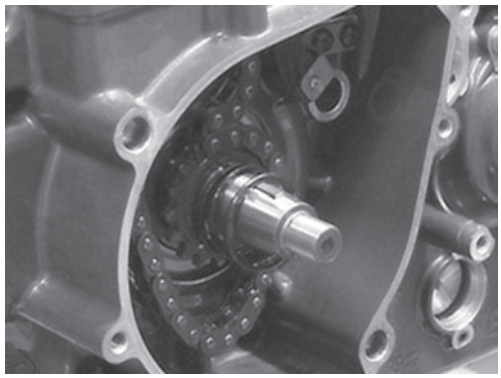

Reassemble the flywheel key, the spring and the flywheel.

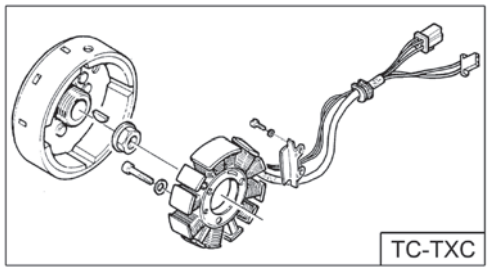

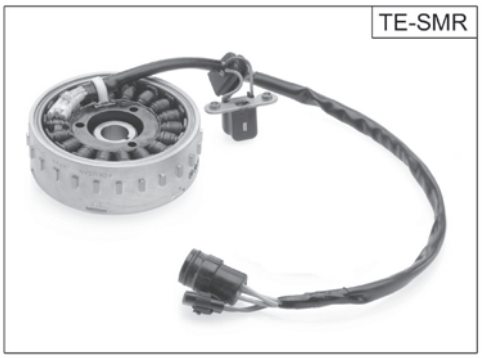

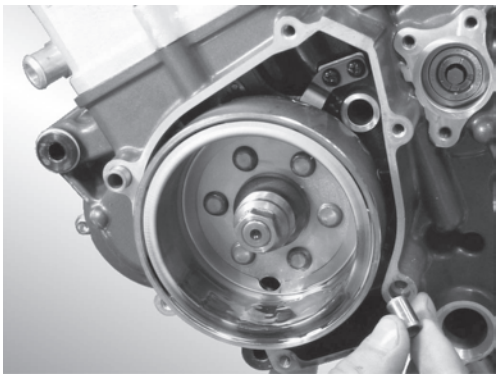

Reassembly of flywheel
Clean the flywheel rotor removing any debris gathered in centrifugated oil and attracted to the magnets. Reassembly the Woodruff key and the rotor on the crankshaft. Holding the rotor (on the R.H. side place an aluminium shim between the teeth of the primary drive gears, in order to prevent its rotation), mount the nut and tighten it to 75 Nm-7,65 Kgm- 55.3 ft/lb. Mount the two centering bushes.

Reassembly of transmission cover
If the centering bushes have been removed, reassemble them in the crankcase. Mount the gasket and the O-rings.

: Check that the engine oil hole is not obstructed.

Mount the transmission cover and tighten the twelve screws (8 Nm-0,8 Kgm- 5.8 ft/lb).

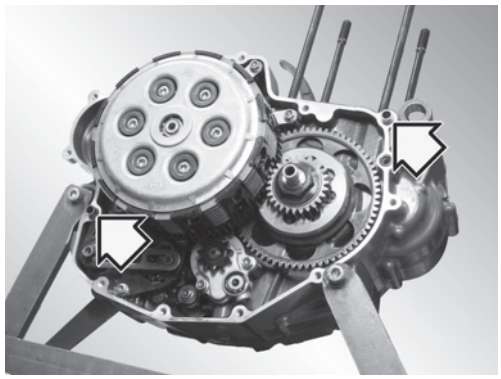

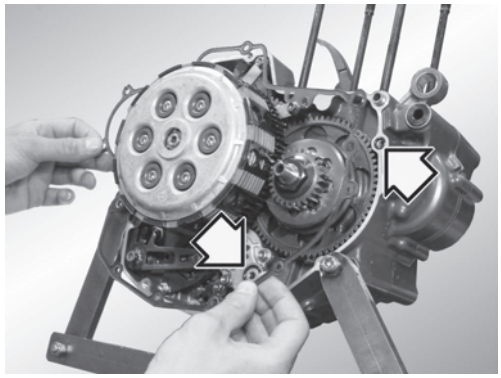

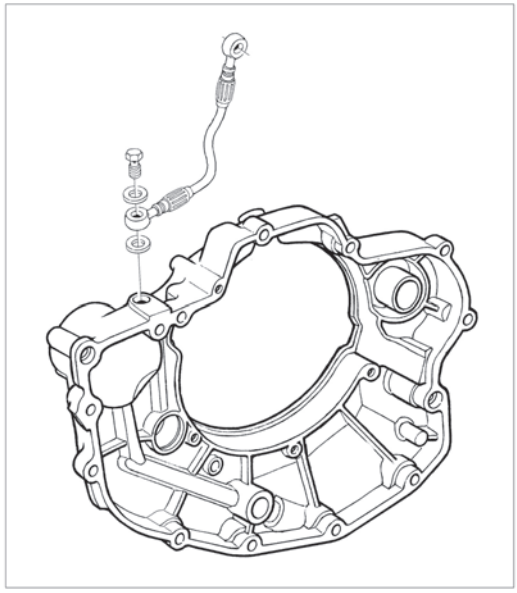

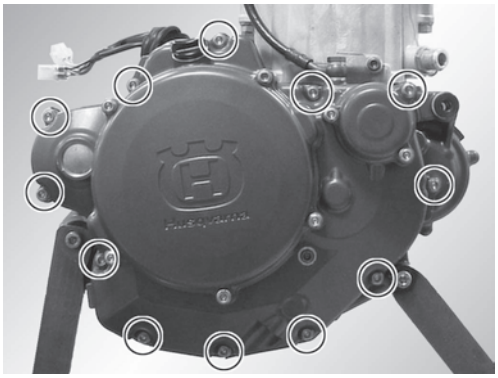

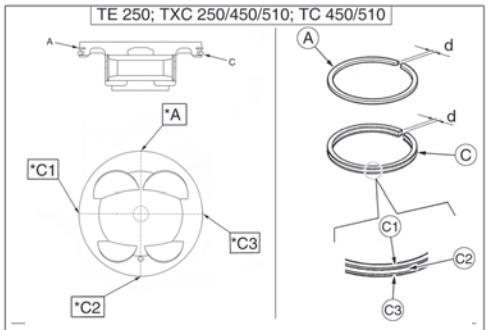

PISTON RING CUT SETTING

Fit the piston rings as shown in the picture. The manufacturer mark, if it is present on the piston ring, must be turned upwards.

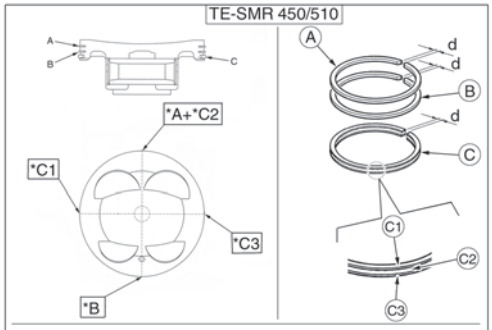

PISTON RING CUT SETTING

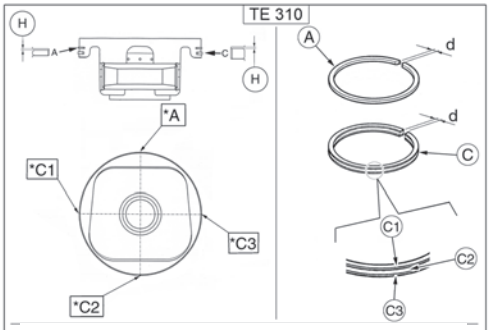

PISTON RING CUT SETTING

*: "d" cut posistion

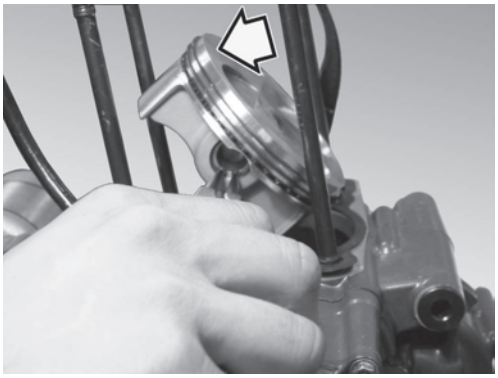

Assembly of piston and cylinder
Install a new base gasket. Install the piston, lubricate the piston with motor oil and install the piston pin circlips. Make sure that the arrow on the piston is pointing forward.

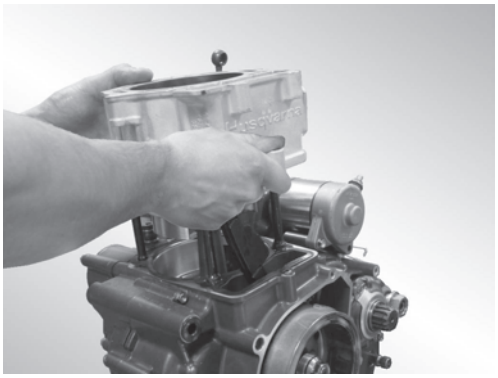

Lubricate the cylinder liner with engine oil and push it down over the piston rings.

Assembly of cylinder head

For valves reassembly see page G.15. If the rocker arm pivots have been disassembled, tighten the pivots fastening screws to 25 Nm-2,55 Kgm-18.4 ft/lb (+LOCTITE 243), when reassembling. Always use a new gasket head when assembling: see “Cylinder head gasket selection chart” on page H.45. Assemble chain slider on cylinder head (12 Nm-1,23 Kgm-8.9 ft/lb) then the cylinder head. Tighten the cylinder head nuts whilst following a cross-over pattern and in steps to 37 Nm+90°-3.8 Kgm+90°-27.5 ft/lb+90° (+ MOLIKOTE HSC).

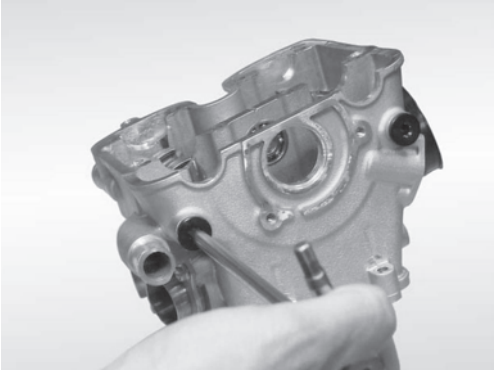

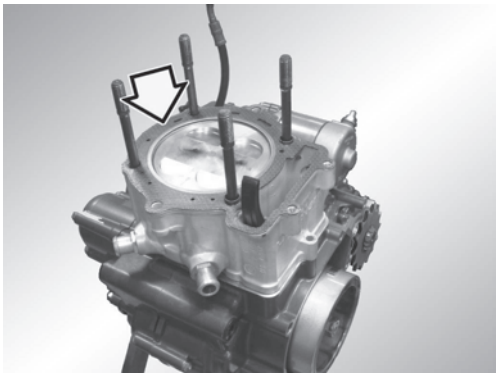

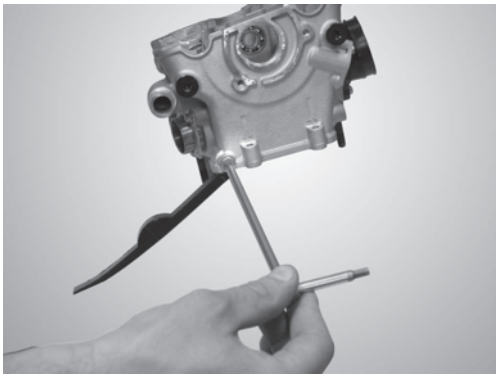

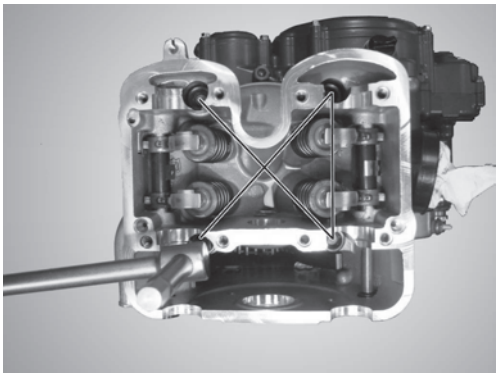

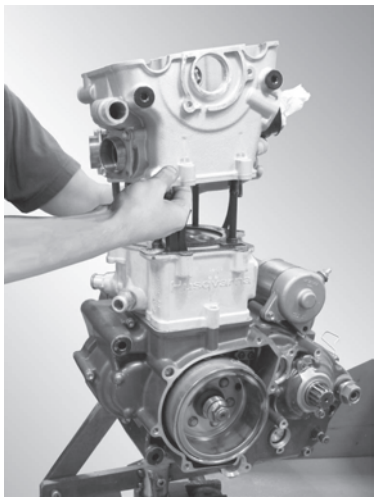

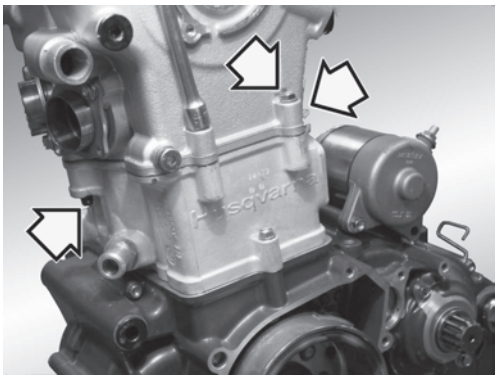

Tighten the two L.h. external screws (8 Nm-0,8 Kgm- 5.8 ft/lb) and the lower nuts (15 Nm-1,5 Kgm- 10.8 ft/lb). Reassemble the lubrication hose on the transmission cover (15 Nm-1,5 Kgm-10.8 ft/lb). If the intake manifold (A) of the cylinder head has been dismantled, tighten the two screws to 3 Nm-0,3 Kgm-2.2 ft/lb+LOCTITE 272.

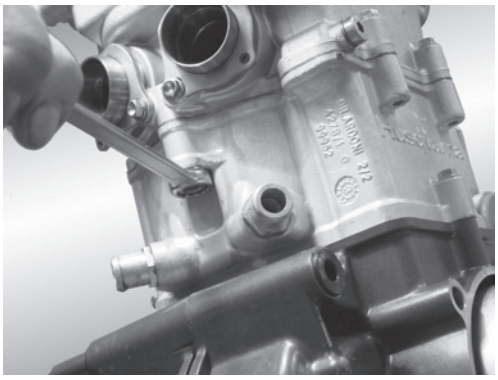

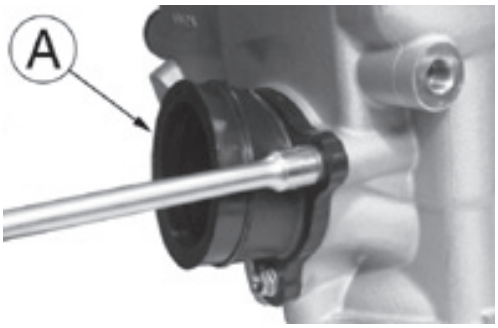

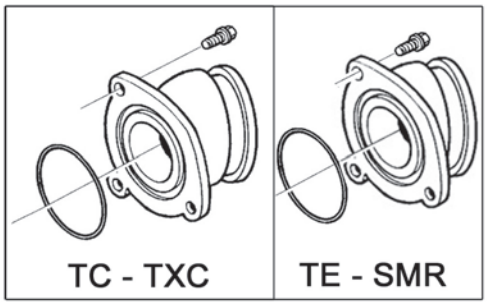

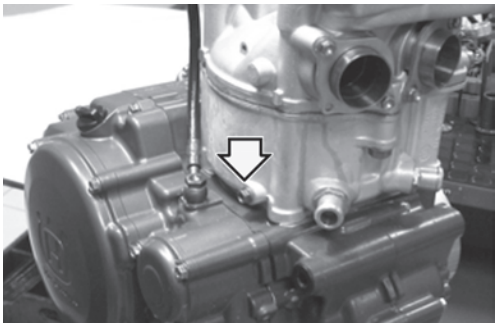

Reassemble the coolant drain screw on cylinder, R.H. side (8 Nm-0,8 Kgm-5.8 ft/lb).

Position the piston at TDC at the end of the compression stroke. Put the timing gear in seat without rotating the crankshaft and mount the chain.

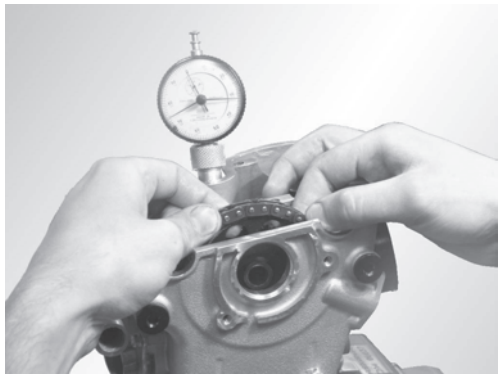

Mount the water pump (8 Nm-0,8 Kgm-5.8 ft/lb+LOCTITE 542), without rotating the crankshaft, in order to obtain the perfect alignement of the twin chasing on the gear to the spline on head face (see picture) (tighten water pump fastening screws to 8 Nm-0,8 Kgm- 5.8 ft/lb+LOCTITE 542). Mount cylinder head-water pump hose.

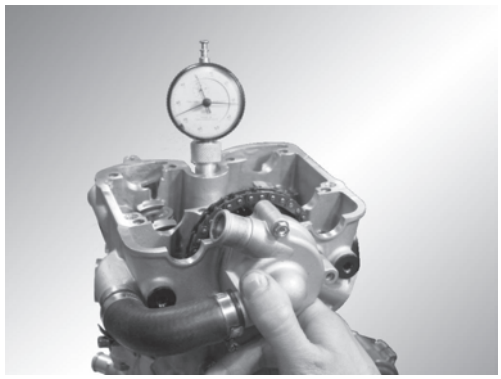

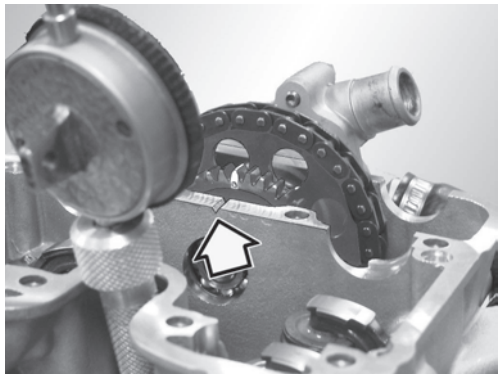

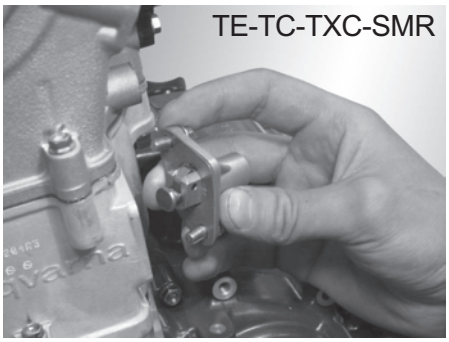

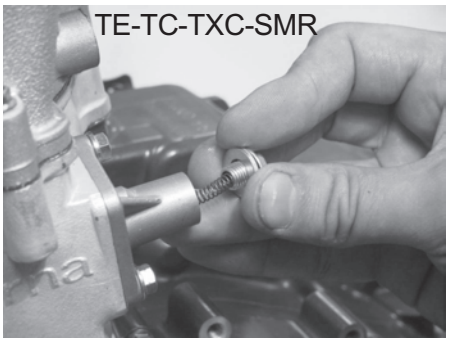

Assembly of cam-chain tensioner (TE-TC-TXC-SMR)
Back the pin for tightening the chain, reassemble the cam-chain tensioner with its two screws (8 Nm-0,8 Kgm-5.8 ft/lb). Insert the spring, the washer and the rear bolt (5 Nm-0,5 Kgm-3.6 ft/lb).

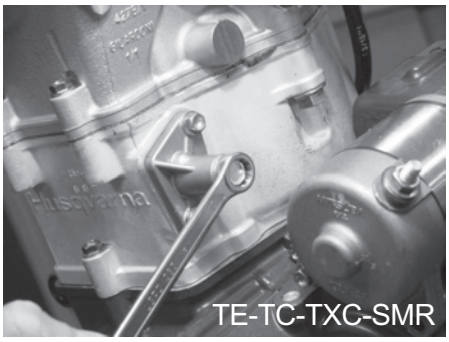

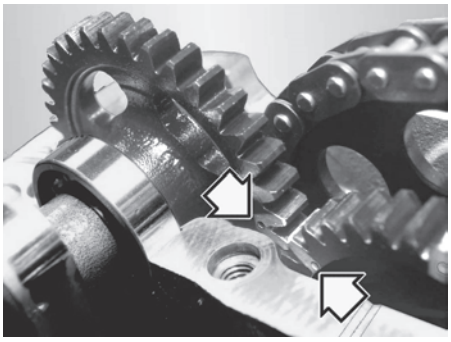

Mount the intake camshaft aligning the reference on the gear with the left reference on the timing gear.

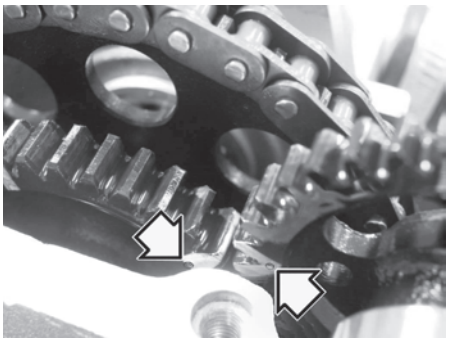

Mount the exhaust camshaft aligning the reference on the gear with the right reference on the timing gear.

Assembly of valve lifter
Mount the valve lifter in the head and, turning it in lift position, insert the retaining pin.

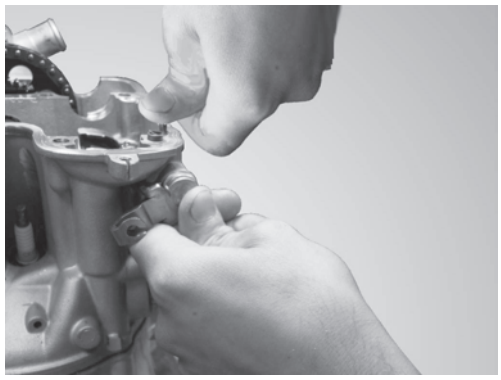

Reassemble the lubrication tube.

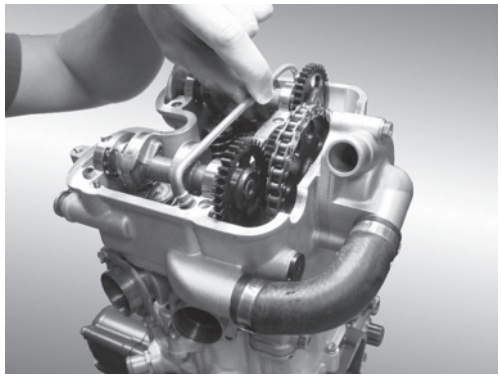

Lubricate the cammes abundantly with motor oil.

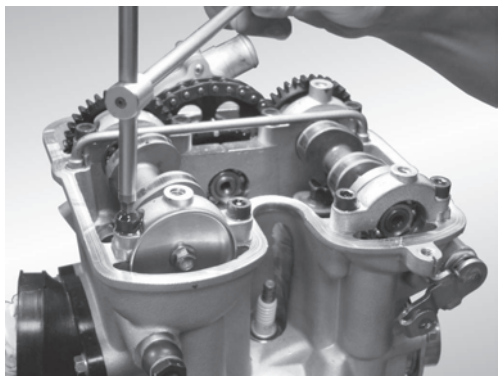

Reassemble the four U-bolts for fixing the camshaft and tight the screws to 12 Nm-1,2 Kgm-8.7 ft/lb.

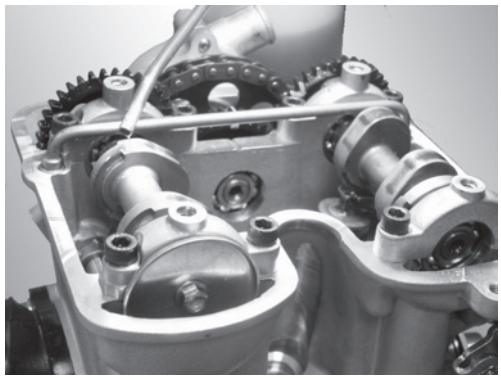

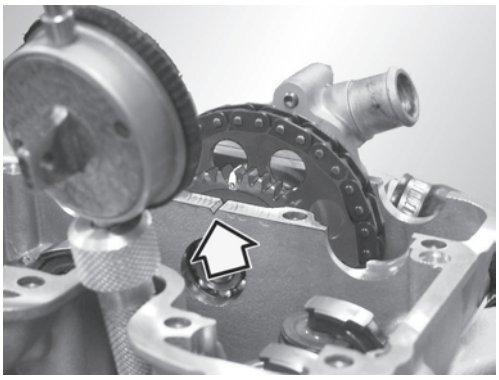

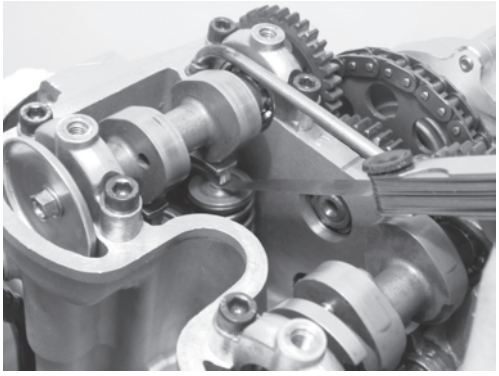

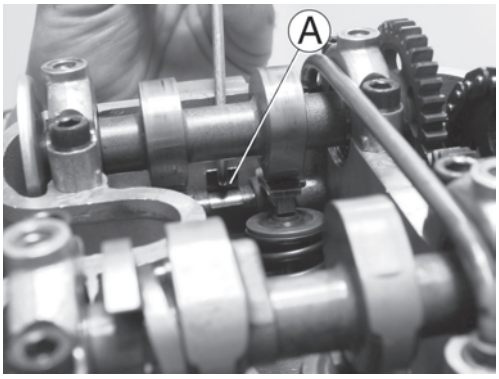

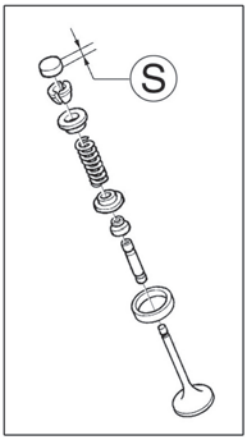

Turn the crankshaft a few times in order to set the timing elements, bring the piston to Top Dead Center (in this condition, the mark on the cylinder head is aligned with the two marks on the idle gear of the camshafts, as shown in the figure).
Check, by means of a feeler gauge, that the valve clearance is
0,10-0,15 mm (0.004-0.006 in.) for INTAKE and
0,15-0,20 mm (0.006-0.008 in.) for EXHAUST.
Otherwise, lift the retaining clip (A) using a hook, let the rocker arm slide to one side, extract the pad with a pair of pliers and check the thickness.
Depending on the result, fit a new pad (as spare parts, pads are supplied ranging from 1.60 mm-0.063 in. to 2.60 mm-0.102 in. in steps of 0.05 mm-0.002 in.).
The new pad thickness (S) will be:
S=(G1-G)+S1
S=new pad thickness
G1=measured valve clearance
G=correct valve clearance
S1=measured pad thickness
Reassemble the clip and rocker arm.
Check the valve clearance again.

Reassembly of cylinder head cover, spark plug, lubrication hose
Mount the cylinder head cover and its gasket on the cylinder head. Tight the screws whilst following a cross-over pattern and in steps (8 Nm-0,8 Kgm-5.8 ft/lb). Assemble the spark plug (10÷12 Nm-1÷1,23 Kgm-7.2÷8.9 ft/lb) and the lubrication hose (15 Nm-1,5 Kgm-10.8 ft/lb).

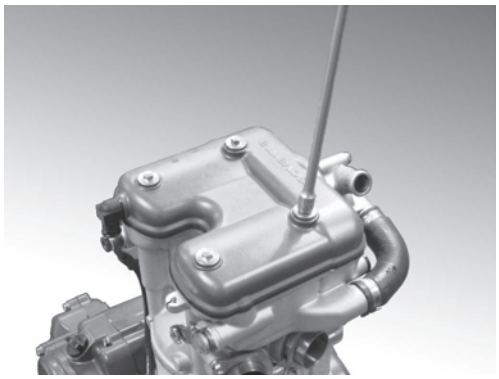

Reassembly of the gear shift position sensor
Remount the spring and the neutral cap in their seat on the positive shaft.

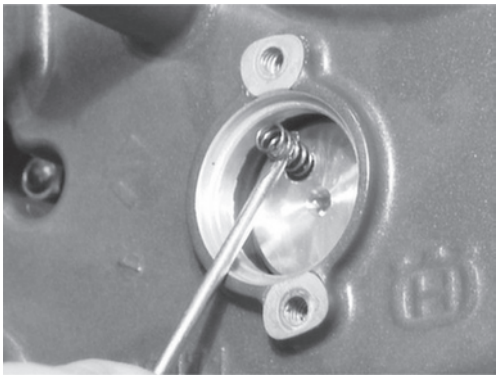

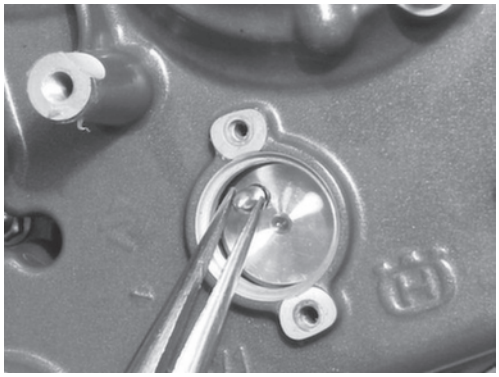

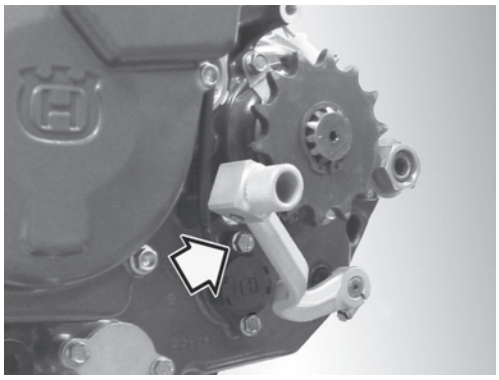

Fit a new O-ring and remount the neutral indicator locking the two fastening screws (6 Nm-0,6 Kgm-4.3 ft/lb+LOCTITE 243).

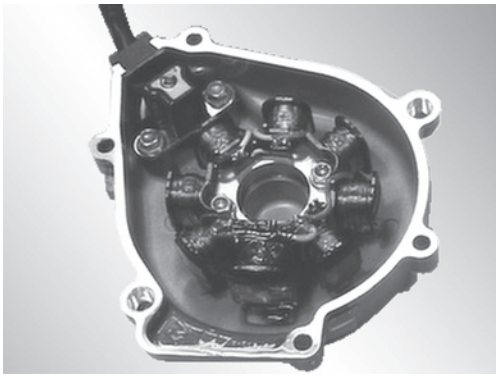

Reassembly of flywheel cover
Mount the stator plate so its mark and stator cover mark are aligned and tighten the two stator fastening screws (8 Nm-0,8 Kgm- 5.8 ft/lb+LOCTITE 272) for TC-TXC and (6 Nm-0,6 Kgm- 4.3 ft/lb+LOCTITE 272) for TE-SMR. Fit the fly wheel grommet on the crankcase. Tighten the two pick-up fastening screws (6 Nm-0,6 Kgm- 4.3 ft/lb+LOCTITE 272). Mount the flywheel cover and tightenthe six screws to 8 Nm-0,8 Kgm- 5.8 ft/lb.

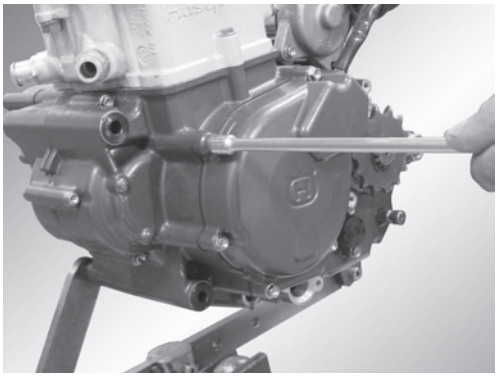

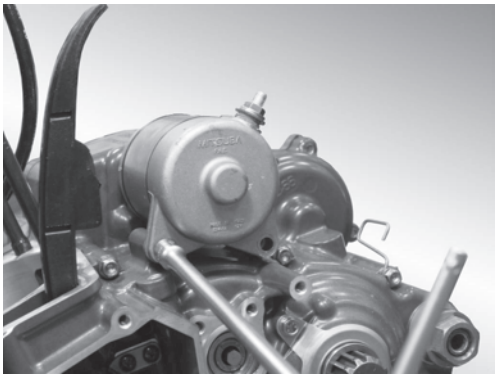

Mount the electric starting motor (8 Nm-0,8 Kgm- 5.8 ft/lb).

Reassembly of gearshift pedal and the kick start pedal
Mount the gearshift pedal (tighten fastening screw to 8 Nm-0,8 Kgm- 5.8 ft/lb). Check that the control pedal is not damaged. Reassemble kick start pedal (TE-TC-TXC) (8 Nm-0,8 Kgm-5.8 ft/lb +LOCTITE 272); verify that the start pedal does not touch the crankcase cover.

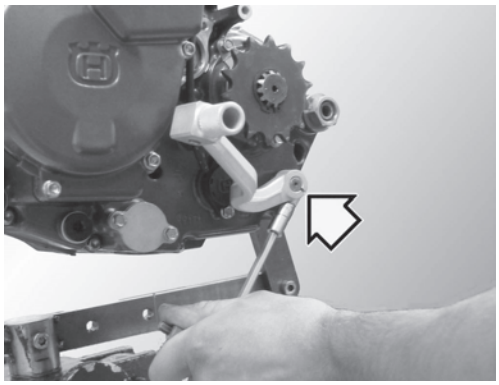

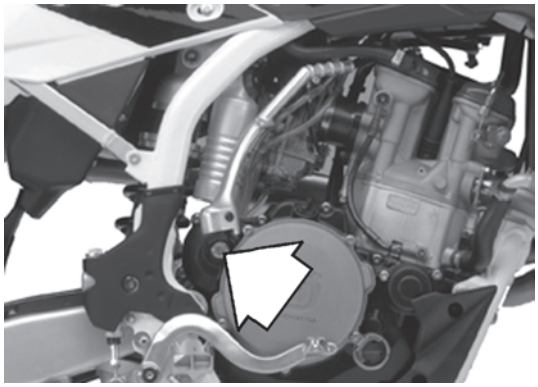

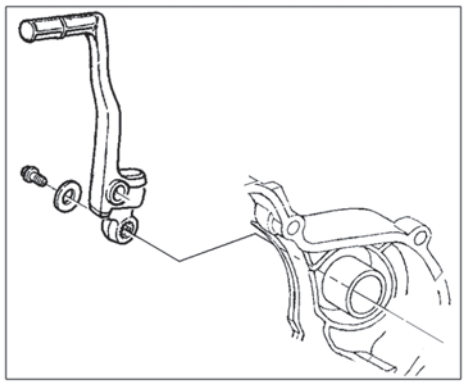

Reassembly of the engine oil filters and drain plug
Reassemble, on engine L.H. side, filter (1) (6 Nm-0,6 Kgm-4.3 ft/lb+LOCTITE 243) e (2) (25 Nm-2,55 Kgm-18.4 ft/lb) ed inferiormente il tappo (3) scarico olio (25 Nm-2,55 Kgm-18.4 ft/lb).
TE-SMR: reassemble the coolant fluid temperature sensor with its O-ring on the cylinder head.

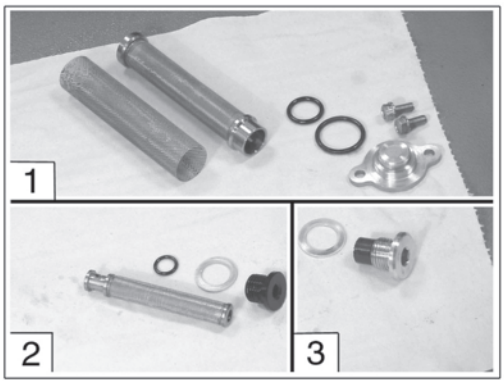

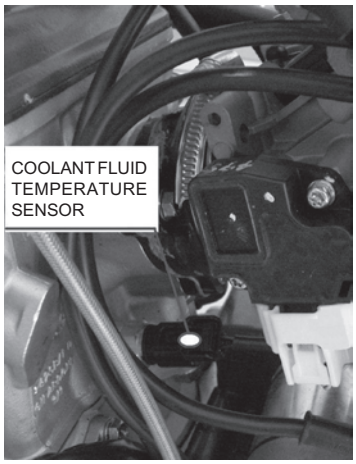

NOTE
If the throttle body is disassembled, adjusting the T.P.S. again (see page S.6).

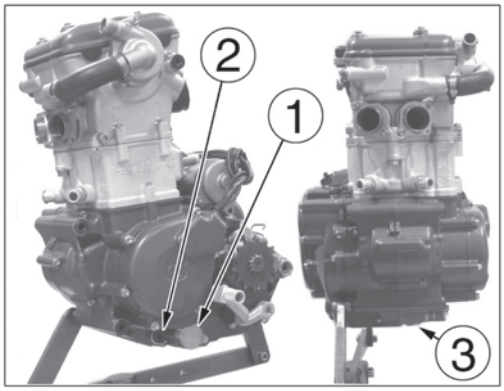

ENGINE AND MOTORCYCLE REASSEMBLY

Reassemble the engine and the motorcycle components previously removed, according to the following order.

Place the engine on the motorcycle.
Insert the rear swing arm axle on the L.H. side then screw the respective nut using a 22 mm wrench (122,5 Nm-12,5 Kgm-90.3 ft/lb).
Screw the engine-frame fastening bolts using a 12 mm wrench on the L.H. side and a 10 mm wrench on the R.H. side (35,3 Nm-3,6 Kgm-26 ft/lb).
Assemble the rear chain (assemble the joint spring by turning the closed side to the chain direction of rotation).
TE-SMR: Assemble the coolant expansion tank, connect the thermoswitch with the main wiring harness, connect the cooling fan with the main wiring harness.
Assemble the clutch hose-alternator cable connecting clamps.
Connect the alternator cable with the main wiring harness.
TE-TXC-SMR: connect the starting motor with the main wiring harness (use a 8 mm wrench for the ground cable and a 10 mm wrench for the nut under the rubber cap).
Using a 8 mm wrench, assemble the clutch control on the engine with the relevant the three screws (8 Nm-0,8 Kgm-5.8 ft/lb) then add the clutch fluid.
On the L.H. side, using a 6 mm Allen wrench, assemble the guide-chain plate (8 Nm-0,8 Kgm-5.8 ft/lb) and, using a 6 mm wrench, assemble the rear transmission sprocket cover with the relevant screws (10,4 Nm-1Kgm-7.7 ft/lb).
Assemble the cap on the spark plug. Assemble the rubber hose on the R.H. side of the cylinder head cover. Assemble the engine lower guard, if previously removed (14,7 Nm-1,5 Kgm-10.8 ft/lb).
Assemble the cooling system hoses using the respective fastening clamps.
Using a 8 mm wrench, assemble the coolant draining screw on the cylinder.
Reassemble the rear brake pedal with the relevant bolt (41,6 Nm-4,2 Kgm-30.7 ft/lb+LOCTITE 243).
Reassemble the side guards of the frame.
Reassemble the carburetor (TC-TXC) or the throttle body (TE-SMR).
Reconnect the pipe between the filter box fitting and the cylinder head cover.
Reassemble the exhaust system (exhaust system pipes screws: 10,4 Nm-1Kgm-7.7 ft/lb).
Reassemble the gas tank assy. with conveyors.
Reassemble the front gas tank fastening screw (10,4 Nm-1Kgm-7.7 ft/lb) then hook the conveyors to the radiators spoilers.
Reassemble the gas tank breather hose on the steering axle. Reassemble the gas tank-carburetor hose (TC-TXC).
Reassemble the battery in its housing; first connect the RED positive cable then the BLACK negative cable; hook the battery elastic strap.
Reassemble the side panels with the relevant screws.
Reassemble the saddle fastening it with the rear pin.

NOTES

1) If not otherwise specified, standard tightening torques for the following thread

M5x0,8 (5,6÷6,2 Nm; 0,57÷0,63 Kgm; 4.1÷4.5 ft/lb)
M6x1 (7,6÷8,4 Nm; 0,80÷0,85 Kgm; 5.8÷6.1 ft/lb)
M8x1,25 (24÷26 Nm; 2,4÷2,6 Kgm; 17.3÷18.8 ft/lb)

2) Regarding the electrical connections, see the diagram on chapter M.
3) Bleed clutch system (see Chapter P).
4) Pour in crankcase 1,7l - 1.5 Imp. Quarts - 1.8 U.S. Quarts of AGIP-RACING 4T (10W-60) oil.
5) Pour in R.H. radiator 1.1÷1.3 l - 2.0 ÷ 2.4 Imp. Pints - 2.3÷2.7 US Pints of AGIP COOL liquid.
6) Check that the kick start pedal works and return freely(TC-TE-TXC).
7) See Chapter D "Adjustments and settings" for correct adjustments.

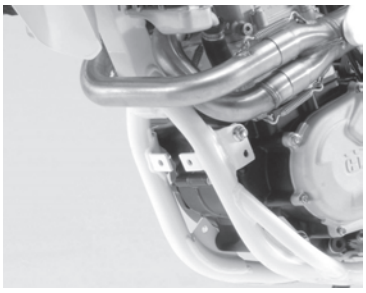

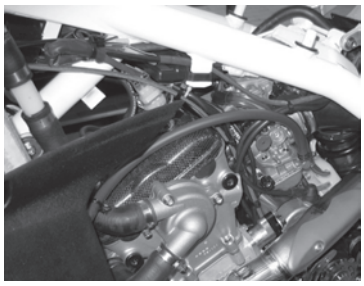
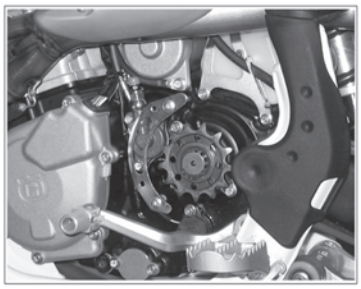

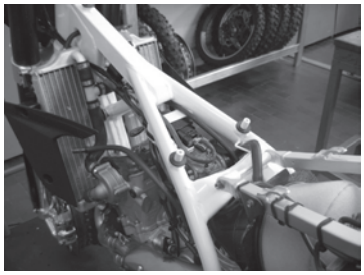

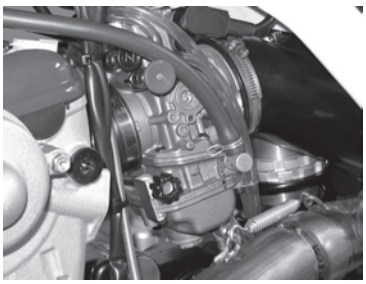

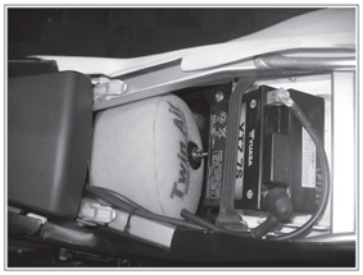
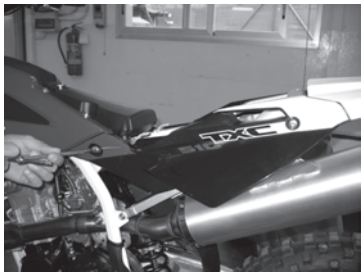

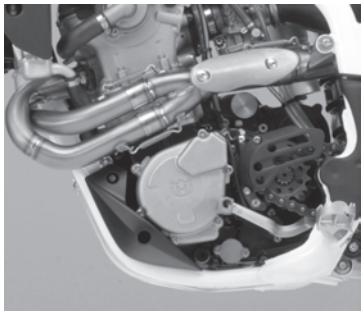

CYLINDER HEAD GASKET SELECTION CHART

Position the piston to T.D.C. at the end of the compression stroke, measure the distance "A" between piston crown and cylinder head face then choose the gasket as shown in the table below.

250-310

CONDITION (see picture)	"A"	gasket thickness	gasket code
1) (piston lower than cylinder head face)	-0.1 ± 0.05 mm	0.7 mm	8A00 A5462 (250) 8A00 H0504 (310)
2) (piston aligned with cylinder head face)	0 ± 0.05 mm	0.8 mm	8000 A5462 (STD) -250 8000 H0504 (STD) -310
3) (piston projecting from cylinder head face)	0.1 ± 0.05 mm	0.9 mm	8B00 A5462 (250) 8B00 H0504 (310)

450-510

CONDITION (see picture)	"A"	gasket thickness	gasket code
1) (piston lower than cylinder head face)	-0.6 ± 0.05 mm	1.0 mm	8E00 A4195
1) (piston lower than cylinder head face)	-0.5 ± 0.05 mm	1.1 mm	8B00 A4195 (STD)
1) (piston lower than cylinder head face)	-0.4 ± 0.05 mm	1.2 mm	8H00 A4195

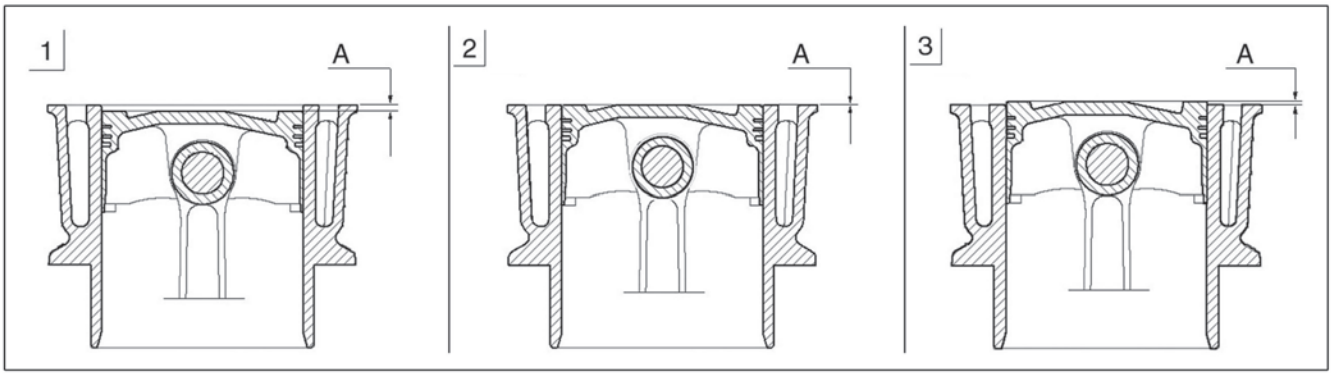

Section

Front suspension (TE-SMR) I.4
Instructions for use of Ø45USD fork
(TE-SMR) I.5
Components of the fork I.6
General rules for a proper overhauling I.7
Instructions for clamping in the vice I.7
Problems - Possible causes - Solutions I.8
General maintenance operations I.8
Cleaning the dust seal I.9
Bleeding the air I.9
Draining the oil I.10
Braking down the pumping element and the bottom
valve I.11
Braking down the fork leg – slider and removing
the oil seals I.13
Overhauling and modifying the cartridge and bottom
valve setting I.14
Cartridge overhauling (rebound braking) I.14
Bottom valve overhauling (compression braking) I.15
Re- assembling the fork leg – slider and oil seals I.16
Re- assembling the pumping element unit and
the bottom valve I.18
Filling with oil I.21
Fitting the fork back on the motorcycle I.22
ADJUSTMENTS I.23
Rebound adjustment I.23
Compression adjustment I.23
Removing the front fork I.24
Front suspension (TC-TXC) I.26
INSTRUCTIONS FOR USE OF Ø50USD FORK
(models TC-TXC) I.27
Components of the fork I.28
General rules for a proper overhauling I.29
Instructions for Clamping in the Vice I.29
Problems - Possible causes - Solutions I.30
General maintenance operations I.30
Cleaning The Fork Legs I.31
Bleeding the air I.32
Draining the oil I.33
Braking down the pumping element and the bottom
valve I.34
Braking down the fork leg – slider and removing
the oil seals I.34
Overhauling and modifying the cartridge and bottom
valve setting I.34
Checking the rebound adjusting unit I.36
Compression valve overhauling I.37
Re-assembling the cartridge unit I.38
Breaking down the fork leg - slider and removing
the sealing rings I.41
Re-assembling the fork leg - slider and sealing rings . I.42
Re-assembling the cartridge I.43
Filling with oil I.44
Fitting the fork back on themotorcycle I.44
ADJUSTMENTS I.45
Initial suspension bottoming adjustment I.45
Spring preload adjustment I.46
Rebound adjustment I.46
Compression adjustment I.47
Removing the front fork I.48

TE

SMR

TC-TXC

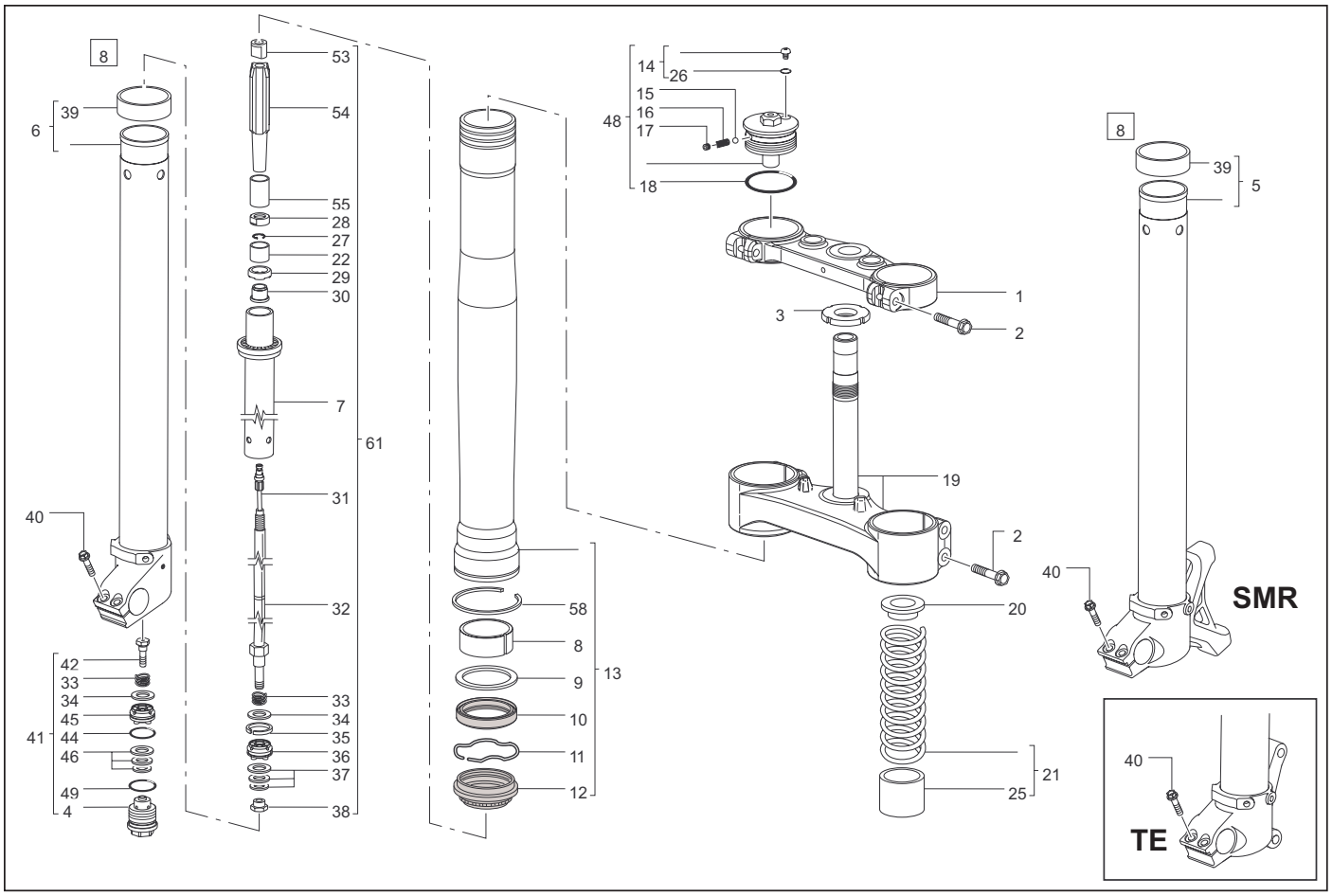

Front suspension (TE-SMR)
The front suspension unit is a MARZOCCHI “U.S.D.” telescopic hydraulic fork with advanced axle; the diameter of the stem is 50 mm .
The thermal excursion of the wheel on the legs axis is 300 mm (TE) e 250 mm (SMR).

INSTRUCTIONS FOR USE OF Ø50USD FORK (TE-SMR)

GENERAL

Telehydraulic upside down fork, with advanced axle.
This fork is based on a multivalve damping system and spring for static load. The compression hydraulic damping is made through a special valve located in each fork's leg lower area, whereas the rebound hydraulic damping is made through a cartridge located inside each stanchion. Each fork's leg is provided with external adjusters for the compression and extension adjustment. On both fork's legs upper cap you can find a screw for the slider inner air bleed.

Stanchion tubes: Made of special, chromed, high- resistance steel, with a special hardening surface treatment (TIN).
Sliders: Made of CNC aluminium alloy, anodised and polished inside.
Sliding bushings: With Teflon facing, free from static friction.
Seals: Computer designed seal rings guarantee the beast seal under compression and the minimum friction during rebound.
Springs: Made of steel, they are available in different stiffness (K). For more detailed information please refer to Table 4 - Springs.
Oil: MARZOCCHI with special formula. It eliminates the formation of foam and keeps the viscosity characteristics unchanged in any working condition; free from static friction.
For very cool climate use oil MARZOCCHI SAE 5 Art. 55 00 03.

SPRING TABLE
The static load of the fork is determined by the spring, positioned at the top of each leg: by changing either spring features or pre-load sleeve length a different suspension behavior is obtained without changing the hydraulic features. The following table describes the "spring+pipe" kit available as spare part.

COSTANT K (N/mm)	CODE
4,5 (TE)	8000 B1713
5,0 (SMR)	8000 A7608

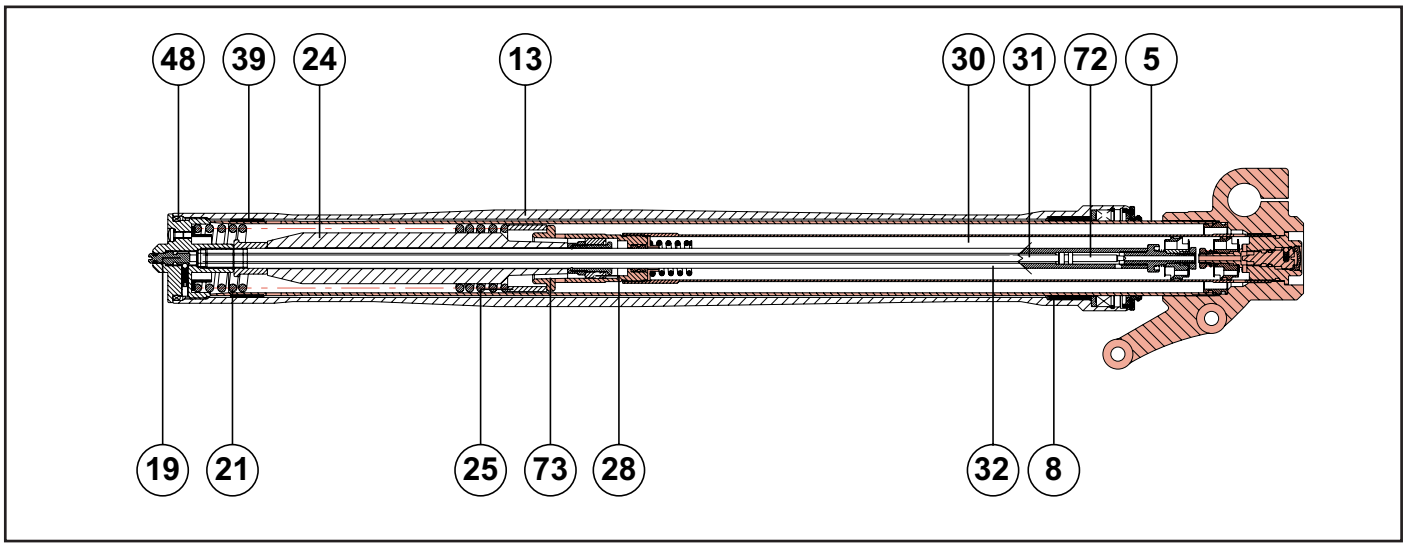

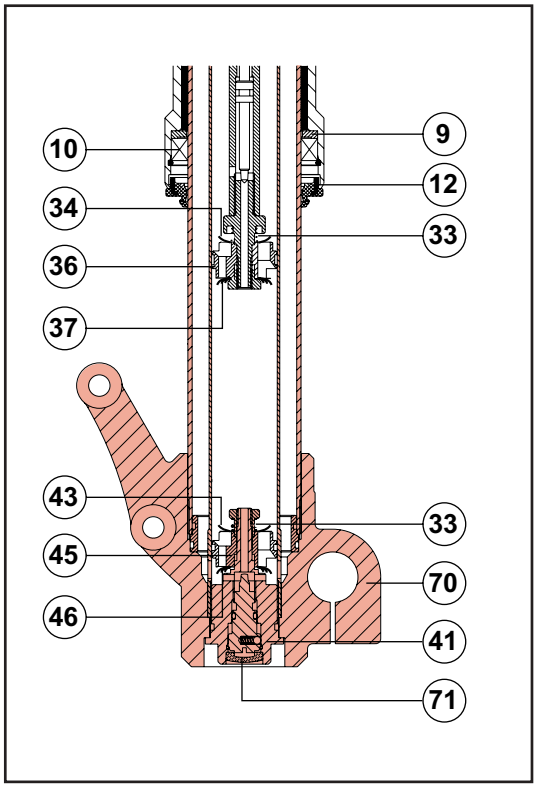

COMPONENTS OF THE FORK

The fork is based on a multivalve damping system that is exactly the same on both fork's legs. Each fork's leg is therefore a complete suspension system which you must refer to when adjusting any part of the fork.

5) Stanchi on tube
8) Lower sliding bushing
9) Spri ng cup
10) Oil seal
12) Dust seal
13) Outer slider
19) Compression adjustment screw
21) Spri ng
24) Spri ng gui de
25) Pre- load tube
28) Foot buffer
30) Cartridge body
31) Inner rod
32) Pumping element rod
33) Washers recall spring
34) Rebound piston washer
36) Pumping element piston
37) Rebound damping piston washers stack
39) Upper sliding bushing
41) Bottom valve
43) Compression valve washer
45) Bottom valve piston
46) Compression damping piston washers' stack
48) Cap
70) Wheel axle clamp
71) Rebound adjustment screw
72) Conic pin
73) Body cap

In order to better understand how the fork works, in the figure here beside the moving parts holding the wheel are indicated with different colours (background highlighted) from those that remain fixed to the motorcycle frame (light background).

GENERAL RULES FOR A PROPER OVERHAULING
• After a complete breakdown, always use new, original Marzocchi seals when reassembling.
• To tighten two bolts or nuts that are near each other, always follow the sequence 1- 2- 1 using a torque wrench; respect the indicated tightening torques (see Table 1 - Tightening Torques).
• Never use flammable or corrosive solvents to clean the parts, as these could damage the seals. If necessary use specific detergents that are not corrosive, not flammable or have a high flash point, compatible with the seals materials and preferably biodegradable.
• Before reassembling, always lubricate the parts of the fork in contact.
• If you are planning not to use your fork for a long time, always lubricate the forks components that are in contact with some fork's oil.
• Never pour lubricants, solvents or detergents which are not completely biodegradable in the environment; these must be collected and kept in the relevant special containers, then disposed of according to the regulations in force.
• Always grease the seals lips before reassembling.
• Use only metric spanners, not imperial spanners, which may have similar sizes, but can damage the bolts and make it impossible to unscrew them.
• Use the correct size and sort of screwdriver to unscrew slotted or crosshead screws.
• When using a screwdriver to assemble or disassemble metal stop rings, o- rings, sliding bushings or seal segments, avoid scratching or cutting the components with the screwdriver tip.
• Only proceed to maintenance/ overhaul operations if you are sure you are able to do it and you have got the right tools to do so. If this is not the case, or if you are unsure, please contact an authorized service center, where specialized technicians with the right tools and original spare parts will service and overhaul your fork, putting it back into its original working conditions.
• Only use original spare parts.
• Before servicing/ overhauling make sure you have all the spare parts you need for the complete overhaul of both the fork legs (n° 2 oil seals, n° 2 dust seals, n° 2 piston segments).
• Work in a clean, ordered and well- lit place; if possible, avoid servicing outdoors.
• Before servicing the fork, we recommend washing the motorcycle thoroughly and in particular washing the fork well.
• Carefully check there are no metal shavings or dust in the work area.
• We recommend overhauling one fork leg at a time.
• Do not modify the components of the fork.

INSTRUCTIONS FOR CLAMPING IN THE VICE
For some maintenance procedures you may have to use the vice to clamp some components of the fork.

WARNING
The incorrect use of the vice can cause irreparable damage to the fork.

Scrupulously follow the instructions below:
• Limit the use of the vice to those operations where the use of the same is absolutely necessary;
• Use a vice with padded jaws;
• Avoid over tightening the vice;
• Avoid clamping parts of the fork where even slight ovalization could damage the part;

The figure shows the zones recommended for fixing the fork in the vice.
A - Wheel axle clamp
B - Slider in the steering crown fixing zone
C - Top part of pumping element rod above the seat of the spring guide stop ring.
D - Bottom valve spanner seizing

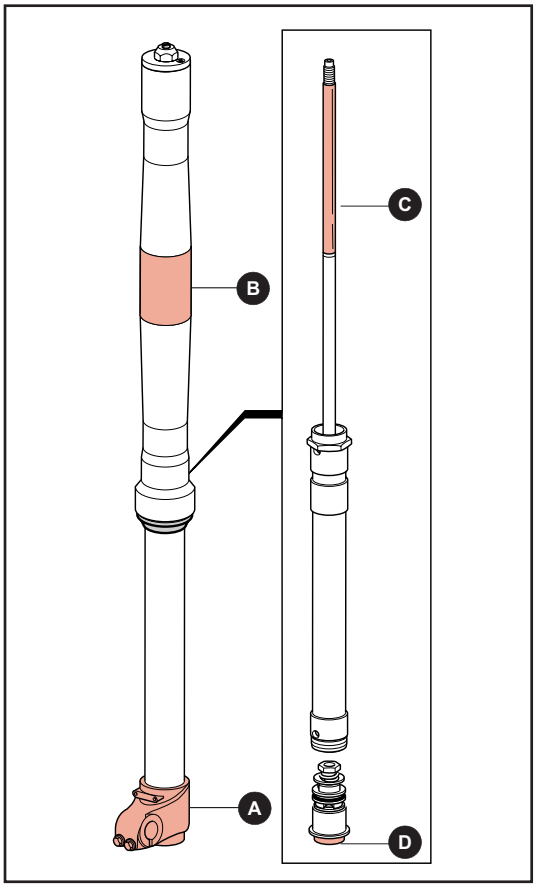

Problems - Possible causes - Solutions

This paragraph indicates some of the problems which may arise during the working life of the fork, as well as the possible causes of these problems and any solutions to the same. Always consult this Table before working on the fork.

PROBLEM	CAUSE	SOLUTION
Oil leaking from the oil seal	1. Worn oil seal	1. Replace the oil seal
	2. Scratched stanchion tube	2. Replace the stanchion tube and the oil seal
	3. Dirty oil seal	3. Replace the oil seal, the dust seal and the oil
Oil leaking from the bottom of the fork leg	1. Damaged bottom valve O- ring	1. Replace O- ring
	2. Bottom valve loose	2. Tighten bottom valve
Loss of sensitivity	1. Worn sliding bushings	1. Replace the sliding bushings
	2. Old oil	2. Change the oil
Fork legs not sliding properly	1. Fork legs not aligned correctly	1. Loosen the wheel axle and align the fork correctly (see Par. 4. 2)
The fork does not react to adjustment variations	1. The pin inside the rod is stuck	1. Clean or replace rod
	2. The adjustment screw is stuck	2. Take off and clean adjustment screw
	3. Impurities in the oil	3. Change the oil making sure the forks' inside components are properly cleaned
	4. Valves are blocked with impurities	4. Change the oil making sure the forks' inside components are properly cleaned
Fork is too smooth with any adjustment	1. Oil level too low	1. Re- establish correct oil level
	2. Too soft or damaged spring	2. Replace the spring
	3. Oil viscosity too low	3. Re- establish correct oil level
Fork is too stiff with any adjustment	1. Oil level too high	1. Re- establish correct oil level
	2. Oil viscosity too high	2. Replace the oil with a lower viscosity one
	3. Too hard spring	3. Replace the spring

General maintenance operations

	Use			
	Intense		Normal	
	Tout terrain	Road	Tout terrain	Road
Check screws tightening up to required torque	Check screws tightening up to			
Clean the dust seal	Before every ride	Before every ride	After every use	After every use
Change the oil	6 hours	20 hours	30 hours	60 hours
Replace the sealing rings	6 hours	20 hours	30 hours	60 hours

If the fork is used on mudded or sandy grounds, the maintenance operations shall be carried out more frequently 30% .

You can find the reference numbers of this chapter about the explored view of the fork on pag. 6.

CLEANING THE DUST SEAL (FIG. 5)

This operation can be carried out with the fork installed on the motorcycle.

Dismantling
- Carefully clean the stanchion tube (6) before carrying out this operation.
- With a small screwdriver prize the dust seal (12) off the slider (13), without scratching the stanchion tube.
- Slide the dust seal along the stanchion tube and clean inside the dust seal and its seat on the slider with a jet of compressed air.

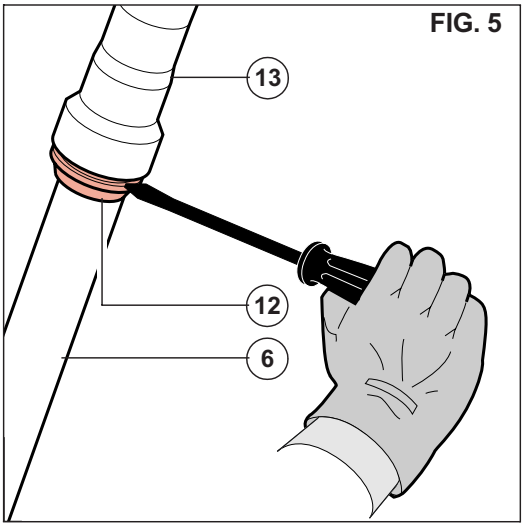

FIG. 5

WARNING
Never use metal tools to clean any particles of dirt

- Compress the fork legs slightly and remove any traces of dirt from the stanchion tubes.
- Lubricate the dust seal and the visible surface of the oil seal with silicon grease.

Re- assembly

- Re- assemble the dust seal (12) in its seat, pressing it home with your hands.

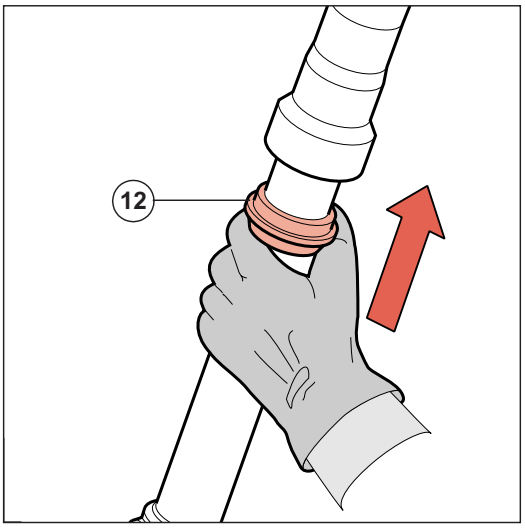

Bleeding the air

This operation must be carried out with the fork assembled on the motorcycle and with the fork's legs fully extended (front wheel off the ground).

The pressure generated by the air that can get into the fork legs while the motorcycle is being used and which, due to the special shape of the oil seals remains trapped inside, can cause the fork to malfunction.

Dismantling
- Monthly or after every race use a crosshead screwdriver to unscrew the air bleed screw (14) in both the fork legs on the top part of the slider, to drain the pressure that can build up inside.
- Check the state of the oil seal (50); replace if necessary.

Re- assembly
- Tighten the air bleed screw (20) to the recommended torque (see Table 1 - Tightening torques), being careful not to damage the oil seal (50).

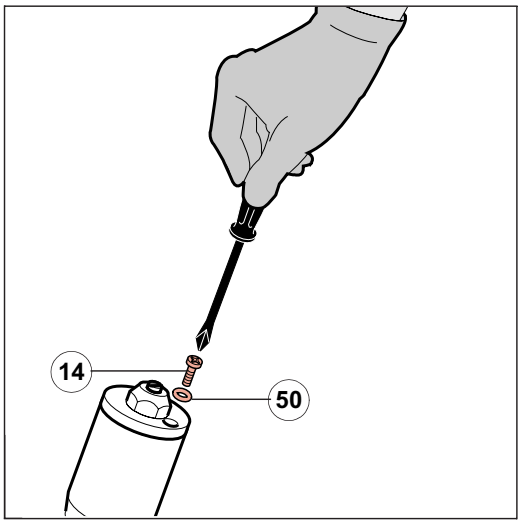

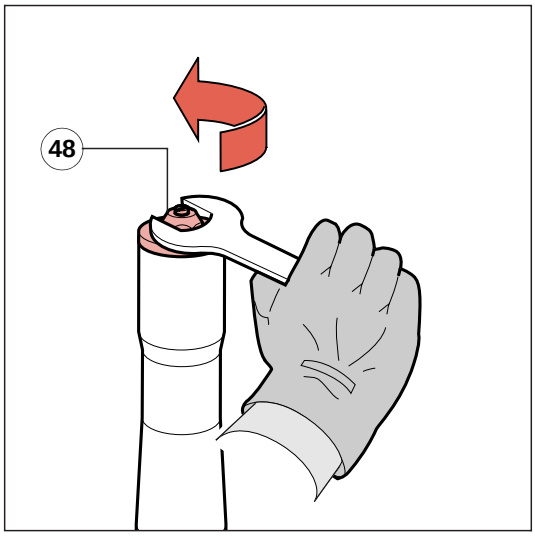

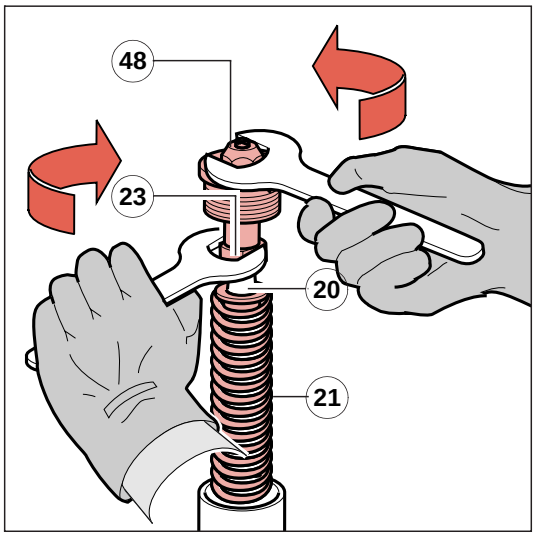

Draining the oil

WARNING
This operation cannot be carried out with the fork installed on the motorcycle.

We recommend loosening the fork cap a little before removing the fork leg from the fork yokes.

• Remove the fork leg from the fork yokes according to the procedure in the motorcycle owner's manual.
• Clamp the fork leg in the vice.
• Remove the fork cap (48) with the 19 mm spanner.
• Slowly lower the slider on the stanchion tube.

• Push the guide spring cap (20) and the spring (21) downwards, so that you can reach the locknut (23) with the 19 mm spanner.
• Holding the locknut (23) with A 19 mm spanner, use another 19 mm spanner to unscrew the fork cap (48) completely.

• Remove the fork cap (48), the guide spring cap (20), the spring (21) and the preload tube (25).
• Remove from the rod's edge (32), the adjustment return inner rod (31).
• Free the fork leg (5) from the vice and tip it into a container of a suitable size to drain the oil; pump the fork to help the oil flow out.

The R5051AC is available as spare part: if you tighten it on the rod's edge, you can make the rod extraction from the inner part of the slider easier.

Check appearance, density and quality of the old oil to get an idea of the oil seal and guiding elements condition. If the oil is dense and dark with solid particles in it, you will have to replace the guide bushings and the sealing elements.

Paragraph 4.11 describes the procedure for assembling and filling with oil.

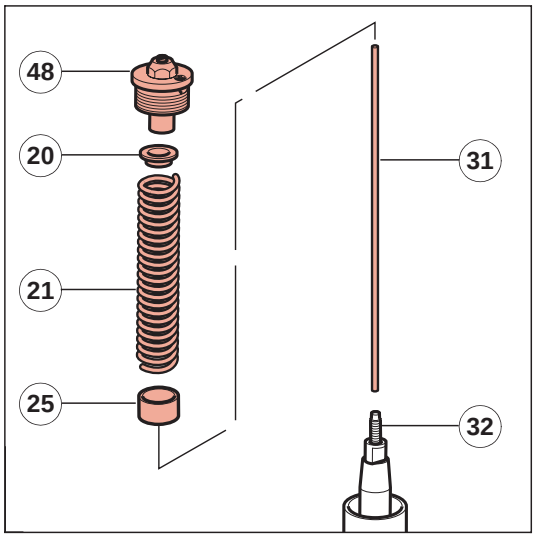

BRAKING DOWN THE PUMPING ELEMENT AND THE BOTTOM VALVE

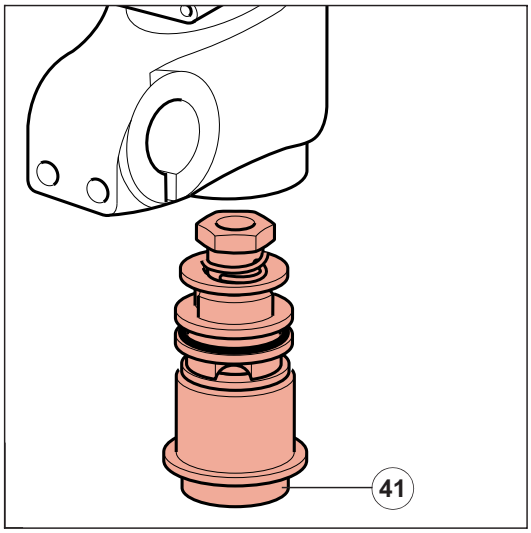

WARNING
This operation must be done only after having drained all of the oil out of the fork leg.

• Clamp the wheel axle clamp in the vice.
• Insert the R5081AA tooling inside the fork leg in a way that you can block the body rotation; to do so, the slot obtained at the tooling lower edge must be perfectly inserted into the body hexagon.

WARNING
In the tooling upper part there are two opposite holes where you can insert an axle to make the blocking easier. However, the tooling must not be rotated in any case, but only used to hold the fork leg inner parts.

• Using the 21 mm tube wrench unscrew the bottom valve (41).
• Remove the bottom valve set (41).
• Take off the damping set (21) from the stanchion tube (5).

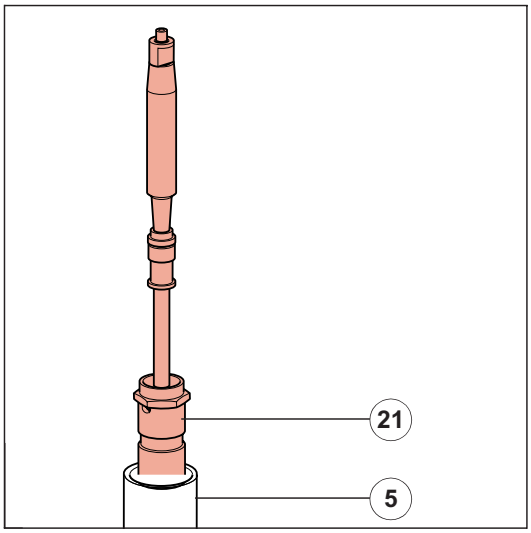

• Unscrew and remove the locknut (23) and take off the guide spring (24).

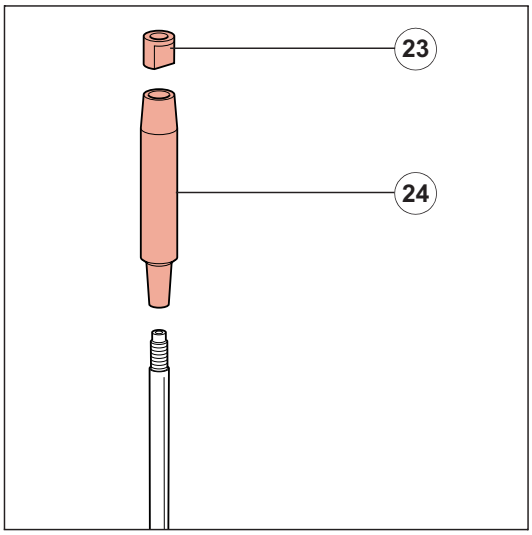

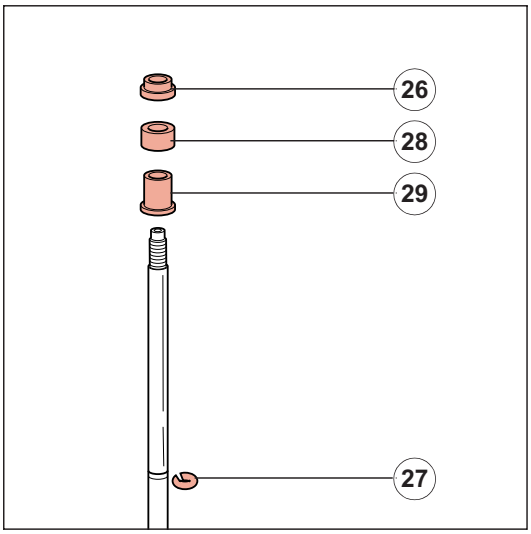

• In order to be able to act on the pumping element you will need to remove the foot buffer components: hold the foot buffer nut (26) using a 18 mm spanner and unscrew the push rod (29) with a 17 mm hexagonal spanner.

• Remove the upper nut (26) and the foot buffer (28).

• Using a small screwdriver prize the stop ring (27) off the rod.

• Remove the stop ring (27) and the push rod (29) off the rod.

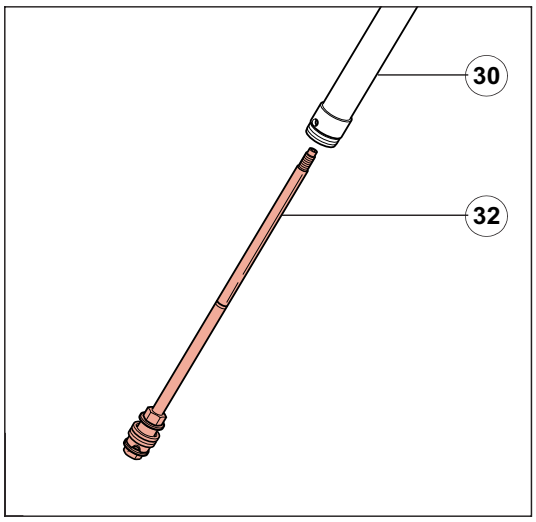

• Push the rod (32) towards the inside area of the body (30) to be able to slide the complete pumping element out, starting from the bottom.

The pumping element can be completely overhauled and adjusted. Paragraph 4. 8 shows how to overhaul and modify the pumping element setting

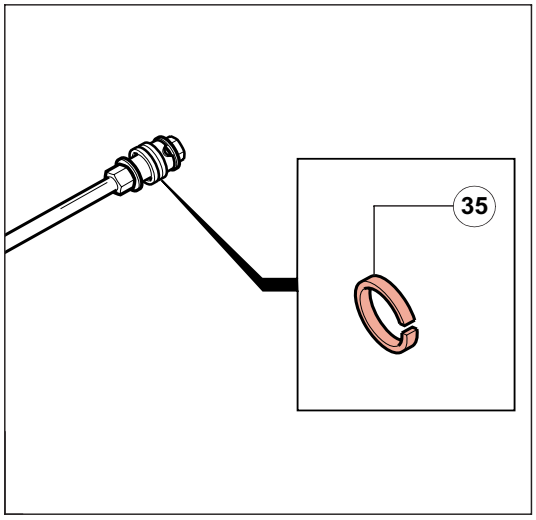

• Verify the segment (35) wear.

Paragraph 4.10 shows how to re- assemble the pumping element and the bottom valve.

BRAKING DOWN THE FORK LEG – SLIDER AND REMOVING THE OIL SEALS

• Remove the dust seal (12) from its seat, using a small flat- tip screwdriver.

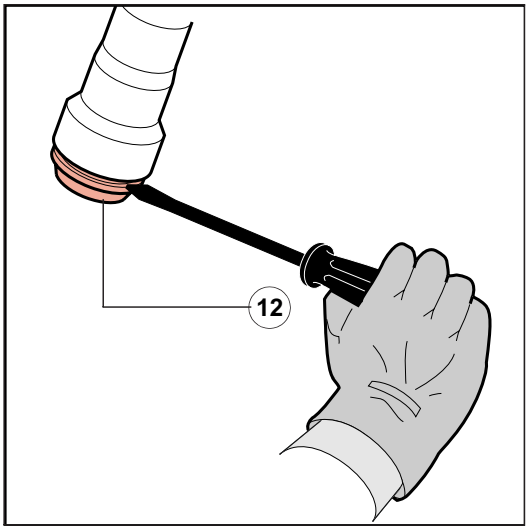

• With the same screwdriver remove the metal stop ring (11).

• Pull the stanchion tube (6) out of the slider (13); to separate these two elements you will have to pull hard. With this operation the oil seal (10), the spring cup (9) and the bottom guide bushing (8) will be removed from the slider.

• Remove the top guide bushing (39) by hand. If this operation is difficult by hand, use a flat-tip screwdriver in the bushing groove.

• Remove the bottom guide bushing (8), the spring cup (9), the oil seal (10), the stop ring (11) and the dust seal (12) from the stanchion tube.

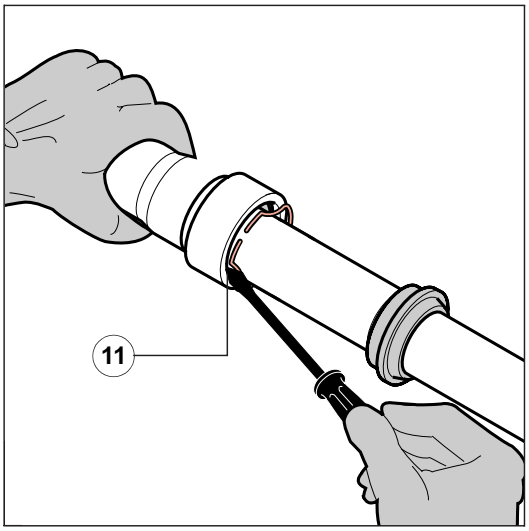

WARNING
The old oil seals and dust seals must not be used again.

Paragraph 4.9 describes the procedure for assembling the seal elements and re-assembling the fork leg -slider.

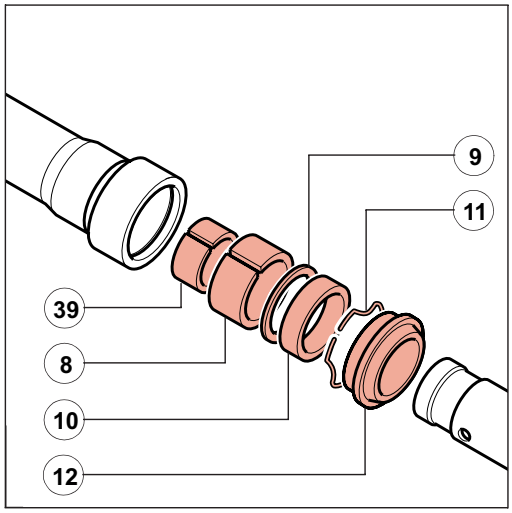

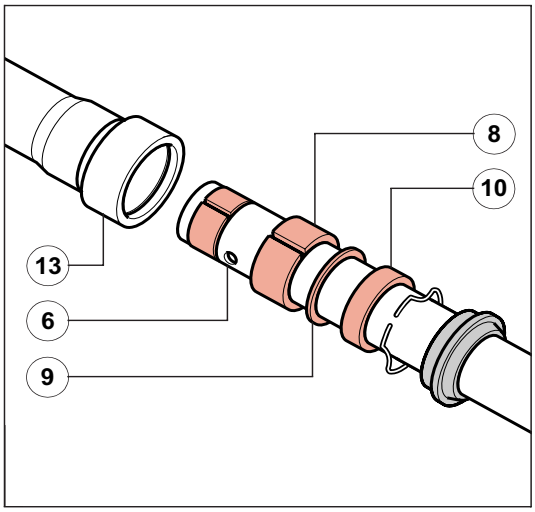

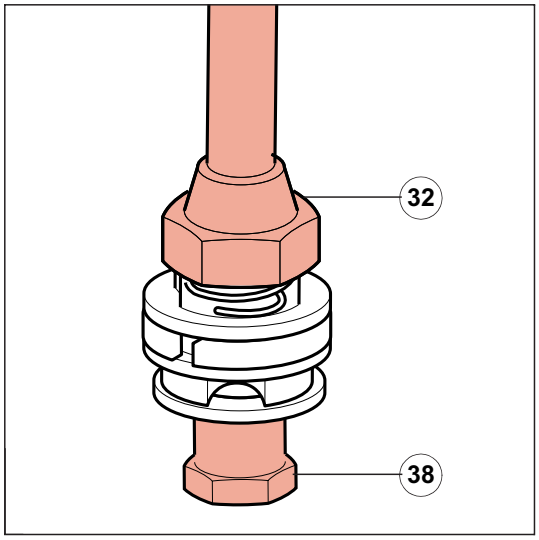

OVERHAULING AND MODIFYING THE CARTRIDGE AND BOTTOM VALVE SETTING

CARTRIDGE OVERHAULING (REBOUND BRAKING)

Dismantling

• CLAMP IN THE VICE THE ROD (32) MILLED AREA.

• Unscrew the nut (38) using a 12 or 13 mm spanner, according to the mounted nut.

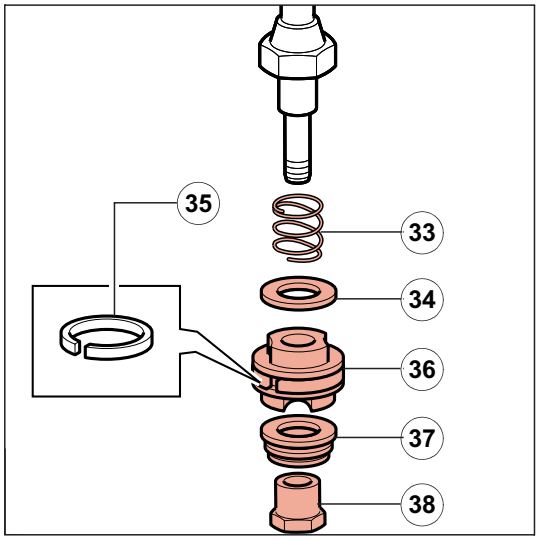

• Remove the nut (38), the washer or the washers' stack regulating the rebound (37), the piston (36) complete with the segment (35), the washer (34) and the spring (33), following this order.

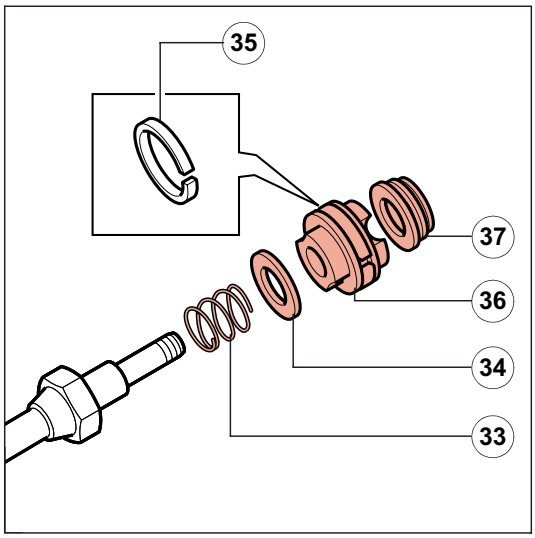

Assembling:

The washers (37) and the piston (36) are the ones causing the rebound braking. It is possible, if needed, to modify the fork's behaviour during the rebound phase, by replacing the washers (37) and the piston (36) with other components having different characteristics.

WARNING

Utilizzare solamente lamelle e pistoni originali Marzocchi, non modificare i componenti.

• Se necessario sostituire il segmento del pistone (35).
• Inserire, nell'ordine, nella parte terminale dell'asta la molla (33), la lamella (34), il pistone (36) completo di segmento (35), la lamella o le lamelle che regolano l'estensione (37).

WARNING
The piston must be oriented in a way that the holes having smaller diameter are placed towards the setting washers (37).

• Tighten the nut (38) manually.
• Clamp in the vice the damping rod (32) milled area.
• Using a proper spanner (12 or 13 mm according to the installed nut) tighten the nut (38) up to the required torque (see Table 1 – Tightening torques).

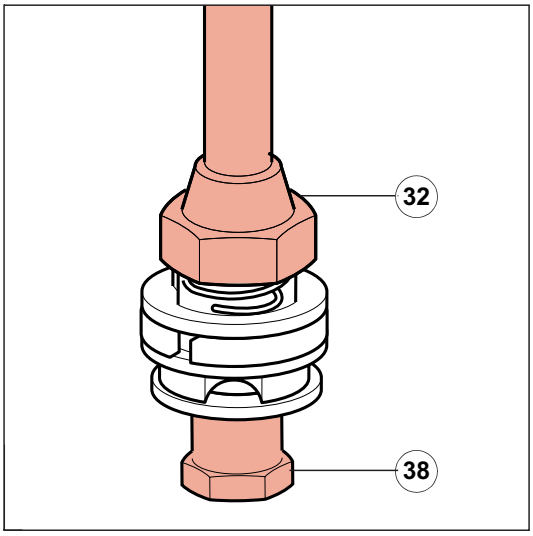

BOTTOM VALVE OVERHAULING (COMPRESSION BRAKING)

Dismantling

• Clamp in the vice the bottom screw through the spanner seizing (47).

• Using a 13 mm spanner unscrew the nut (42).

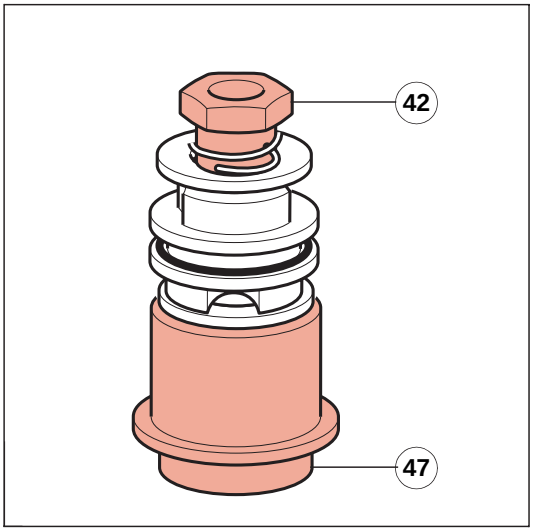

• Remove the nut (42), the spring (33), the washer (43), the piston (45) complete with the o- ring (44), the washer or the washers' stack regulating the compression (46), following this order.

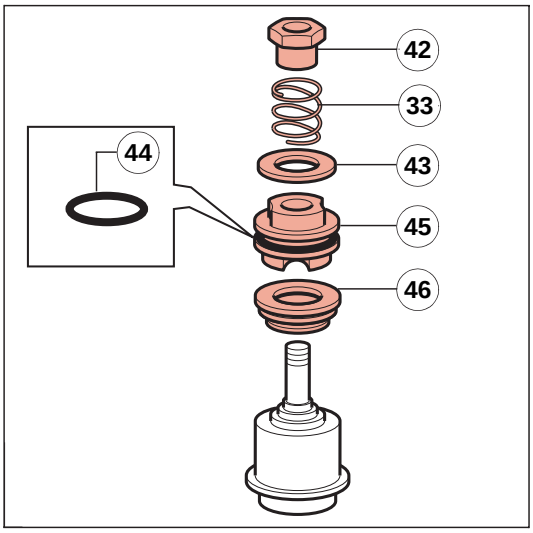

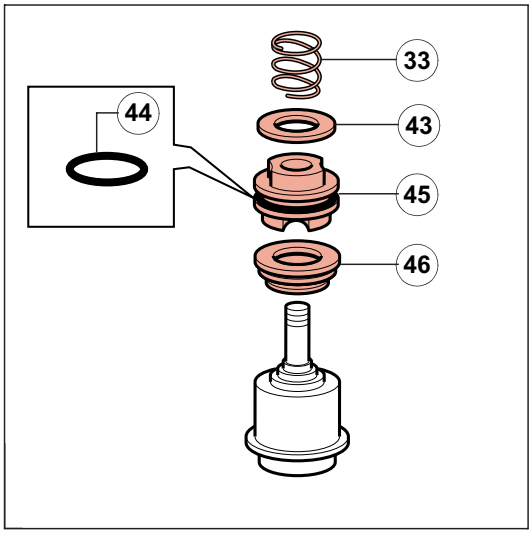

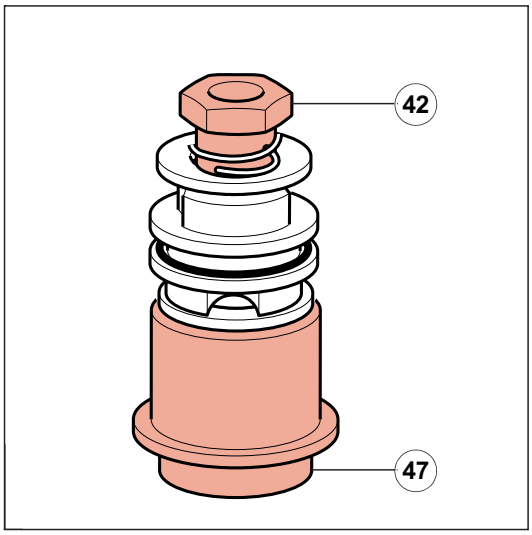

Assembling:

The washers (46) and the piston (45) are the ones causing the compression braking. It is possible, if needed, to modify the fork's behaviour during the compression phase, by replacing the washers (46) and the piston (45) with other components having different characteristics.

WARNING
Only use original Marzocchi washers and pistons, do not modify the components.

• Replace the piston o- ring (44) if needed.

• Insert in the bottom valve the washer or the washers' stack regulating the compression (46), the piston (45), complete with the o- ring (44), the washer (43) and the spring (33), following this order.

WARNING
The piston must be oriented in a way that the holes having smaller diameter are placed towards the setting washers (46).

• Tighten the nut (42) by hand.

• Lock the bottom screw in the vice through the spanner seizing (47).

• Using a 13 mm spanner tighten the nut (42) up to the required torque (see Table 1 - Tightening torques).

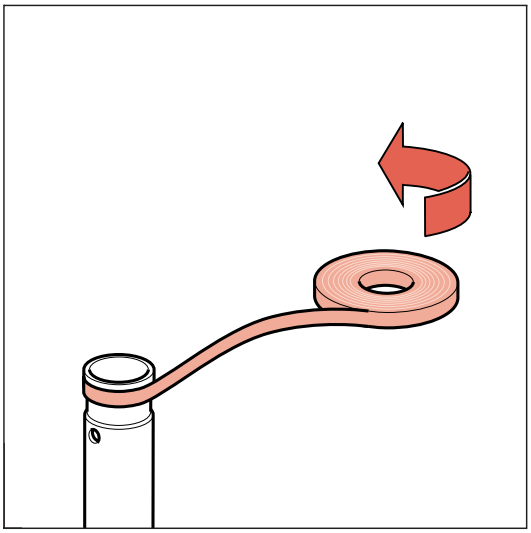

RE- ASSEMBLING THE FORK LEG – SLIDER AND OIL SEALS

The old oil seals and dust seals must not be used again. Before re-assembling, check the conditions of the guide bushings; replace them if they are scratched or grooved. Check the Teflon coating of the guide bushings which must be in a good condition.

• Apply some adhesive tape to the end of the stanchion tube so that it covers the seat of the top bushing.

• Smear the dust seal and the oil seal with some grease.

• Insert the following components in the stanchion tube in this order: dust seal (12), stop ring (11), oil seal (10), spring cup (9) and bottom guide bushing (8).

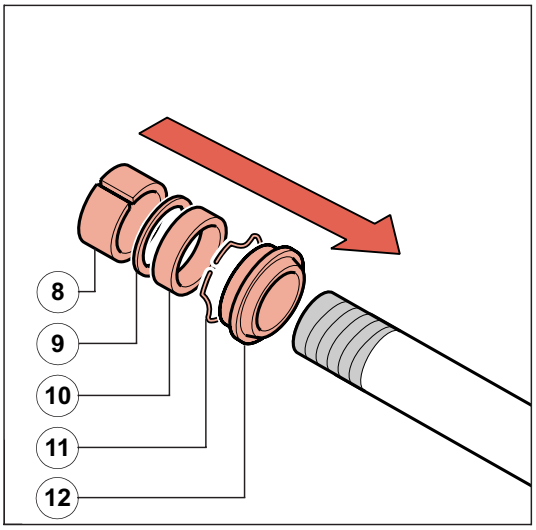

WARNING

Make sure the oil seal (10) is correctly oriented in a way that the hollow side is turned towards the spring cup (9).

• Remove the adhesive tape from the end of the stanchion tube, cleaning any traces of adhesive left on the fork.

• Insert the top guide bushing (39) by hand.

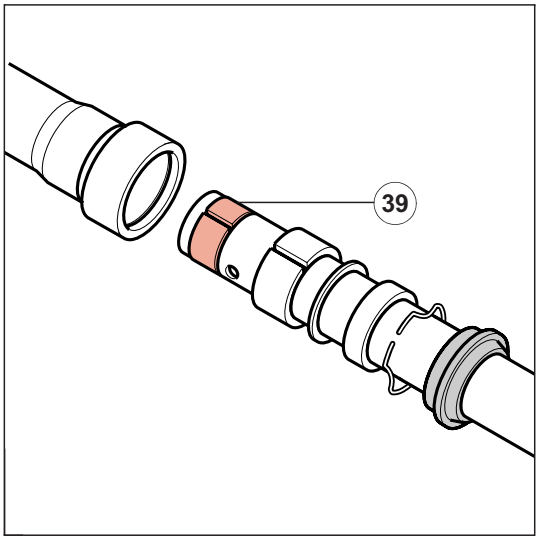

If this operation is difficult by hand, use a flat- tip screwdriver in the bushing groove.

• Delicately introduce the stanchion tube into the slider, being very careful not to damage the top guide bushing.

• Guide the bottom guide bushing until it comes into contact with the slider, the spring cup and the oil seal.

• Mount the special introducer on the stanchion tube (5) and use this, by pushing on the oil seal (10), to insert the bottom guide bushing, the spring cup and the oil seal.

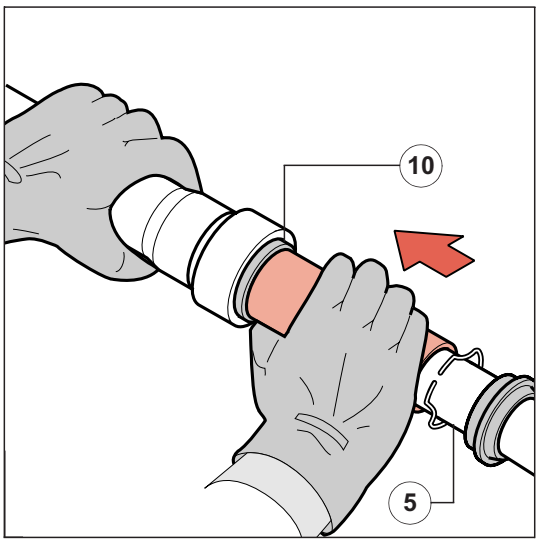

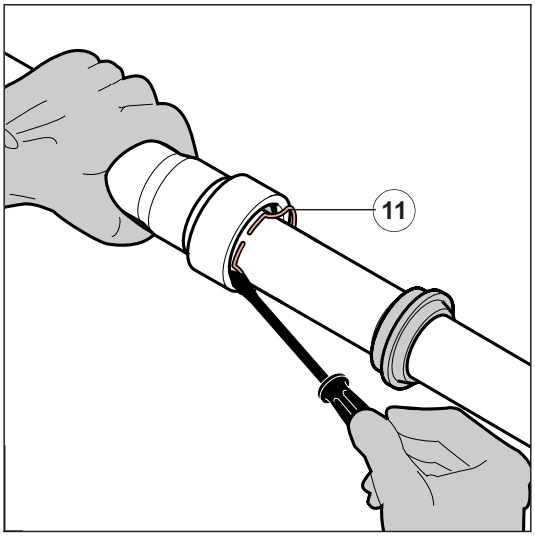

• Mount the stop ring (11) using a small flat- tip screwdriver, checking it fits perfectly into its groove and being very careful not to scratch the stanchion tube.

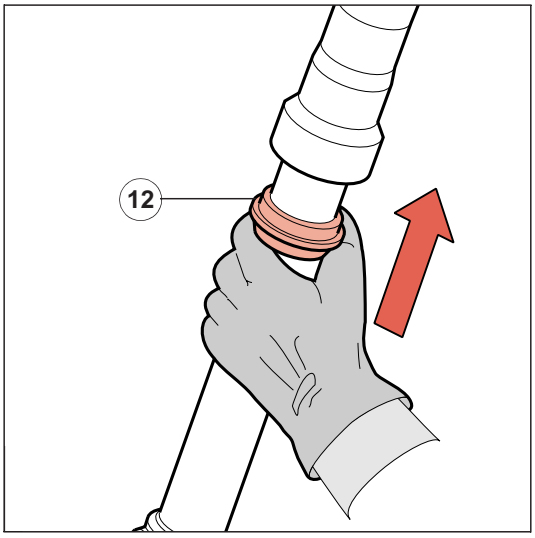

• Re- assemble the dust seal (12) in its seat, pressing it home with your hands.

RE- ASSEMBLING THE PUMPING ELEMENT UNIT AND THE BOTTOM VALVE

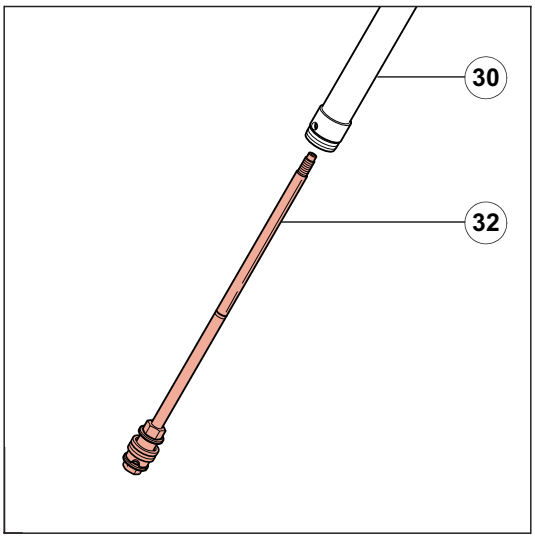

• Insert the pumping element rod (32) into the body (30)

In both pumping elements there is a sealing segment; before the assembling make sure that it is not worn or damaged. Replace if necessary. Take great care and if necessary use a small flat- tip screwdriver to help the pumping element
piston into the sleeve. Insert the piston without any interference.

• Insert the foot buffer push rod (29) into the rod (32); this must be done in a way that the spanner seizing side is oriented towards the body (30) and the metal ring seat (F) is exceeded.

• Insert the metal ring (27) into the proper seat(F)

• Bring the push rod (29) into contact with the stop ring.

• Insert the foot buffer (28); this must be inserted keeping the oil flow slots towards the push rod.

• Insert the upper nut (26) and tighten it on the push rod (29).

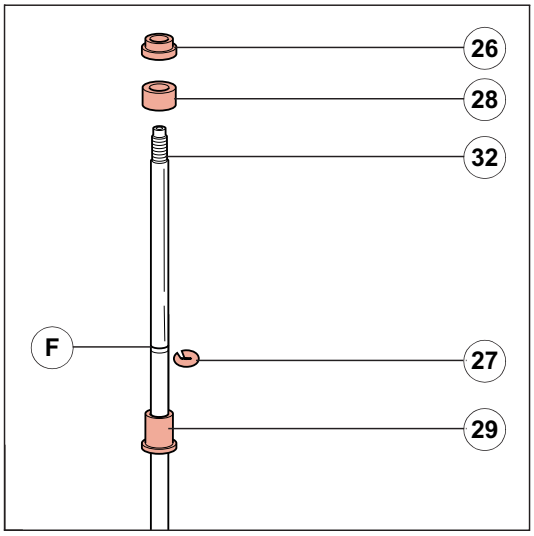

• Hold the nut (26) with a 18 mm spanner and tighten the push rod (29) up to the required torque (see Table 1 - Tightening Torques), using a 17 mm spanner.

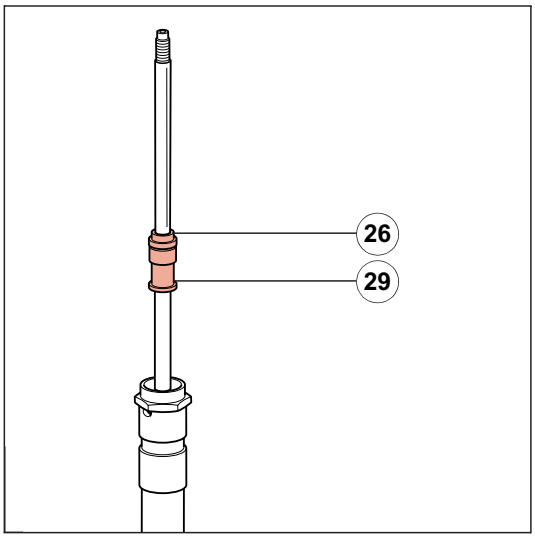

• Insert the guide spring (24) in the pumping element rod (32); the guide spring must have the smaller diameter side towards the foot buffer.

• Screw the locknut (23) till the end without tightening.

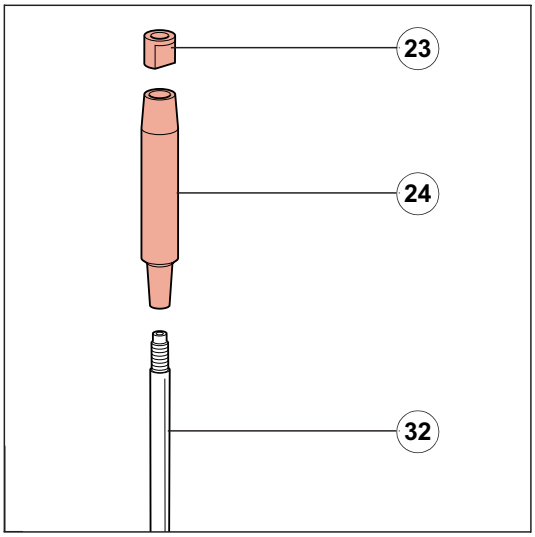

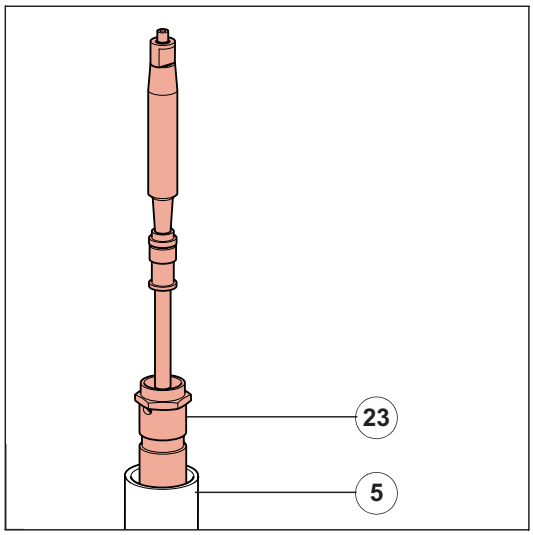

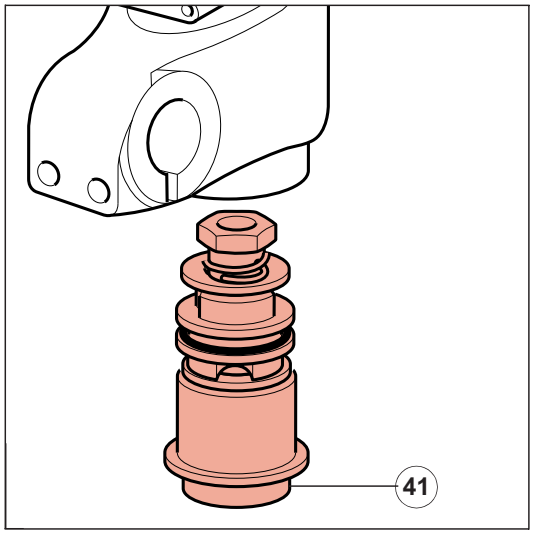

• Push the pre- assembled pumping element (23) until it is in contact with the stanchion tube (5).

• Tighten the bottom valve by hand.

• Insert the R5081AA tooling inside the fork leg in a way that you can block the body rotation; to do so, the slot obtained at the tooling bottom edge must be perfectly inserted into the body hexagon.

WARNING
In the tooling upper part there are two opposite holes where you can insert an axle to make blocking easier. However, the tooling must not be rotated in any case, but only used to hold the fork leg inner parts.

• Using a 21 mm tube wrench tighten the bottom valve (41) up to the required torque (see Table 1 - Tightening Torques).

FILLING WITH OIL

The R5051AC is available as spare part: if you tighten it on the rod's edge, you can make the rod extraction from the inner part of the slide easier.

• Lift the slider completely on the stanchion tube.

• Prepare the quantity of oil to pour into the fork leg (see Table 2 – Oil and quantity).

OIL AMOUNT FOR EACH STEM:
TE: 725cm^3
SMR: 740cm^3

• Pour roughly 2/ 3 of the required oil into the slider (13), then pump the fork a few times to remove any traces of air.

• Pour the rest of the oil in.

• Lower the slider on the stanchion tube until it reaches the dust seal stop on the wheel axle clamp.

• Wait a few minutes and check the air volume (see Table 2 - Oil and quantity) and if necessary refill to the right level.

A lower or higher volume of air, or a type of oil other than the recommended type can change the behaviour of the fork in every phase.

• Lift the slider (13) on the stanchion tube (5).

• Insert the adjustment return inner rod (31).

• Insert the preload tube (21), the spring (25) and the guide spring cup (20).

• Screw the fork cap (48) down.

• Fully unscrew the adjustment screw (R), which corresponds to the open adjuster.

• Using two 19 mm spanners tighten locknut (23) on the cap (48) up to the required torque (see Table 1 - Tightening torques).

• Lift the slider on the stanchion tube.

• Tighten fork cap (48) on the slider with the 19 mm spanner to the recommended torque (see Table 1 - Tightening torques).

• Re- establish the correct setting by turning the adjustment screw (R) (see paragraph 5).

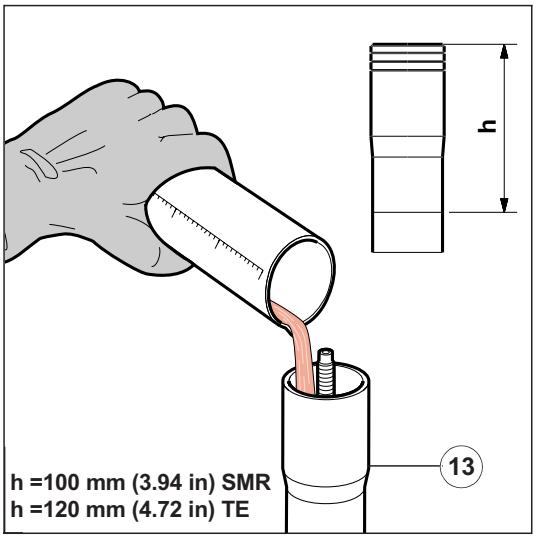

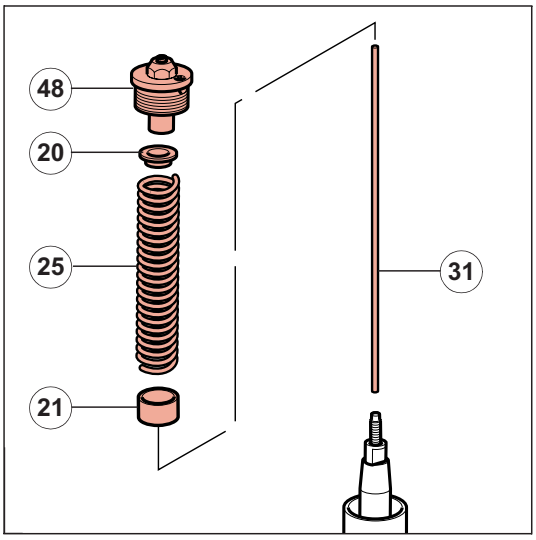

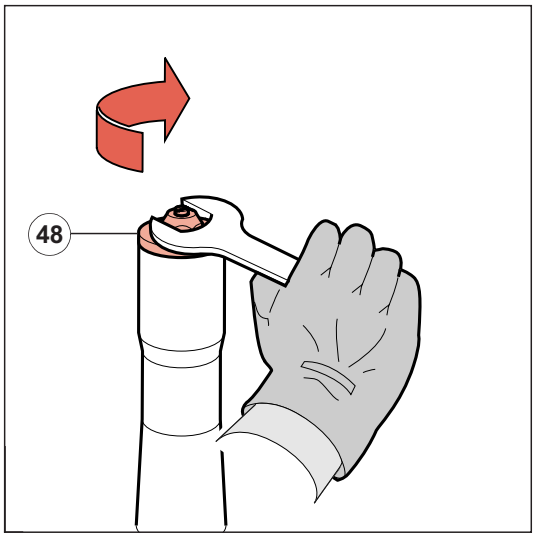

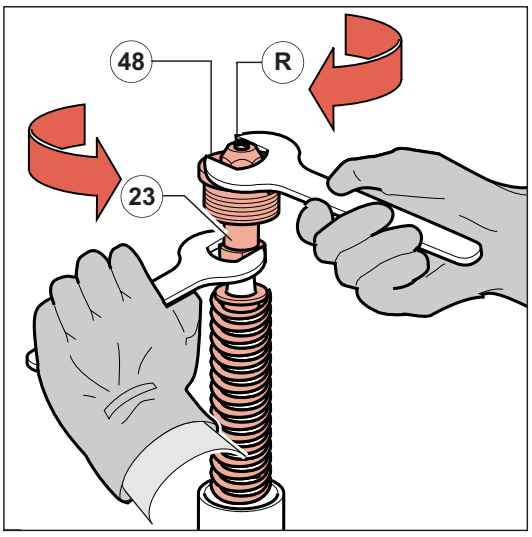

FITTING THE FORK BACK ON THEMOTORCYCLE

WARNING

Fit the fork back onto the frame following the instructions in the motorcycle manufacturer's manual, as for the steering elements, brakes and wheel. The incorrect assembly of these elements can be dangerous for the rider.

For the fork to work correctly, the wheel must be installed on the fork as follows:

• Insert the axle through the right wheel axle clamp, the wheel and the left wheel axle clamp.

• Screw down the nut on the left side of the axle and tighten fully.

• Fully compress the fork a few times.

• Tighten the two bolts on the right wheel axle clamp following the sequence 1- 2- 1.

ADJUSTMENTS

REBOUND ADJUSTMENT

The extension (or rebound) damping adjustment can be made by acting on the adjustment screw (R) you can see on the upper cap of both legs.

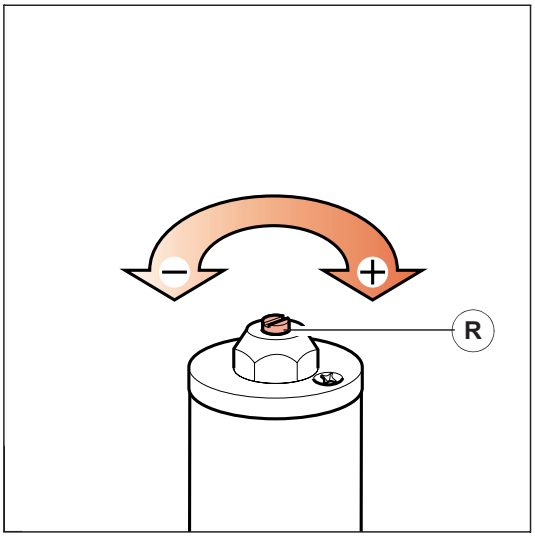

To modify the rebound braking adjustment, always start from the “fully closed” position (the screw is fully turned clockwise). Each screw position can be recognized by a “click”.

• When turning the adjuster (R) clockwise, using a proper spanner, you will increase the rebound hydraulic damping, making the fork slower during the rebound phase.

• When turning the adjuster (R) counterclockwise, using a proper spanner, you will decrease the rebound hydraulic damping, making the fork more responsive during the rebound phase.

WARNING
Do not force the adjustment screw (R) past its limits.

COMPRESSION ADJUSTMENT

The compression damping adjustment can be made by acting on the adjustment screw (C) you can see at the bottom of both fork legs.

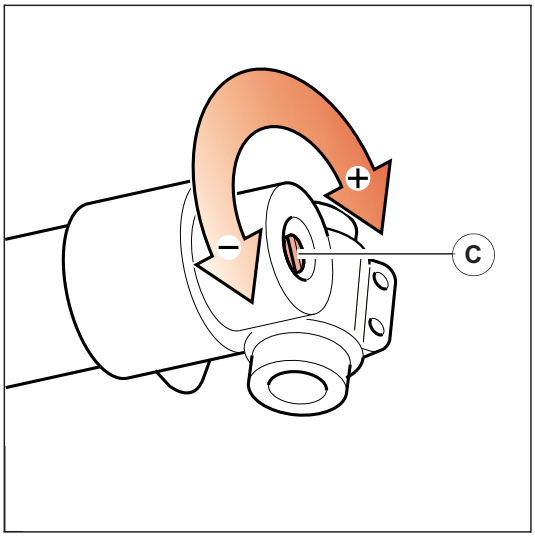

To modify the compression braking adjustment, always start from the “fully closed” position (the screw is fully turned clockwise). Each screw position can be recognized by a “click”.

• Remove the plastic cap

• When turning the adjuster (C) clockwise, using a proper spanner, you will increase the compression hydraulic damping, reducing the travel made by the fork, under the same stress.

• When turning the adjuster (C) counterclockwise, using a proper spanner, you will decrease the compression hydraulic damping, making the fork softer against ground harshness.

WARNING
Do not force the adjustment screw (C) past its limits.

• Put the plastic cap back to its seat.

STANDARD ADJUSTMENTS

Compression: 12 clicks
Extension: 12 clicks

Removing the front fork
Take note of measure "A" which must be restored when reassembling. Set a support under the engine to lift the front wheel from the ground, working as follows:

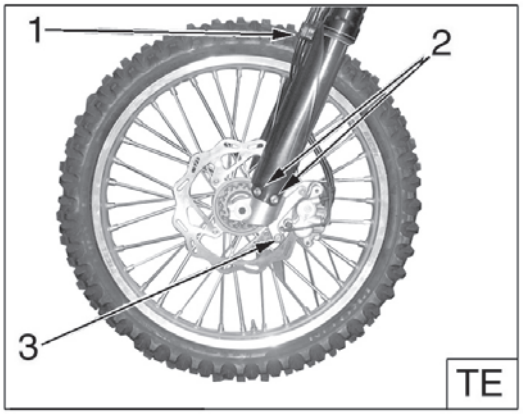

-remove,on the L.H. side, the screws (1) , the brake hose and the instrument cable clamp (TE-SMR) on the fork tube guard;
- remove the six screws (2) and the fork tube guards;
- remove the brake caliper from the L.H. fork tube by unscrewing the two fastening screws (3);
- remove the front wheel following the instructions on page Y.6;
- unloose the screws (4) fastening each fork slider to the steering head and steering base;

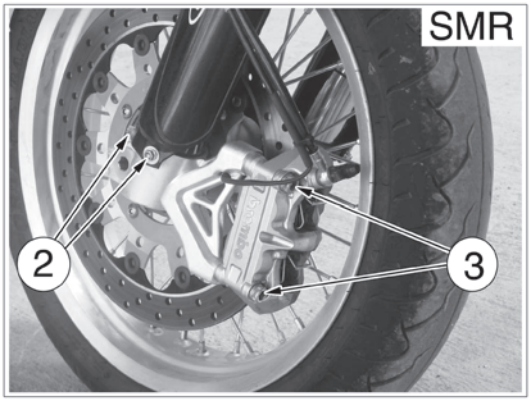

- remove the fork legs.
Assemble the front wheel following the instructions on page Y.8 and check the distance “B” between magnet (6) on the brake disc and sensor (7) on the brake caliper. Restore the starting measure “A”.

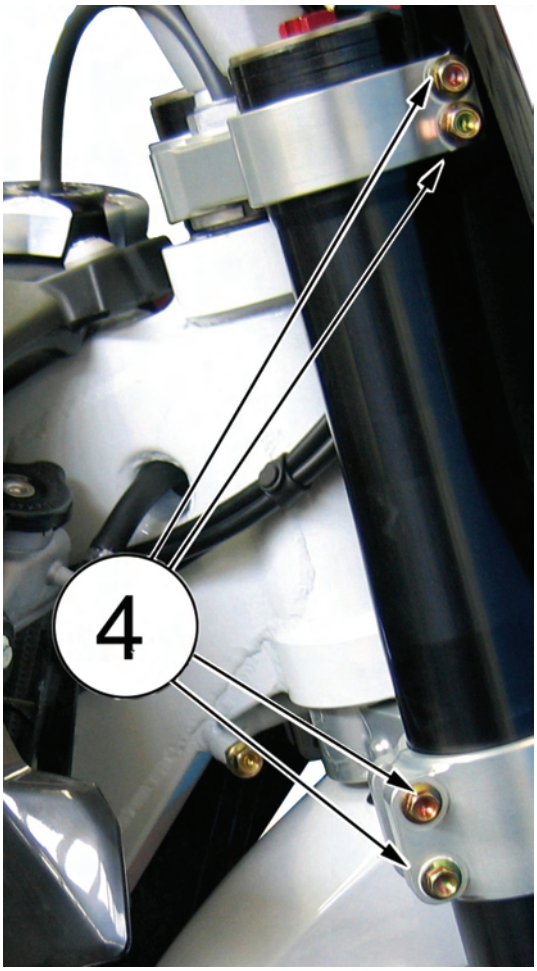

B=2÷4 mm
(0.08÷0.16 in.)

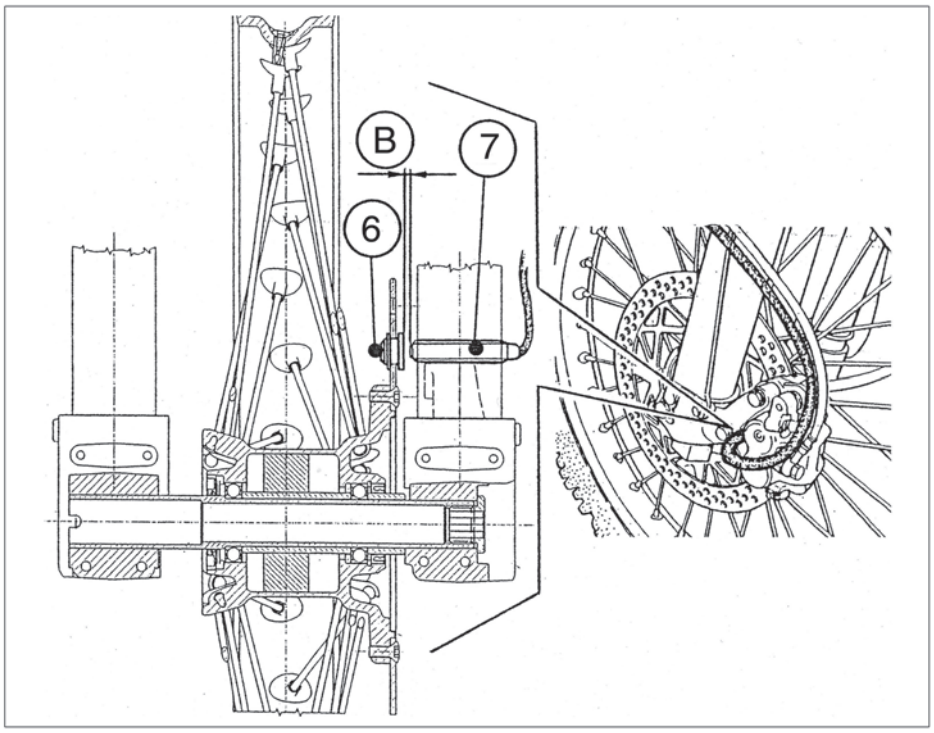

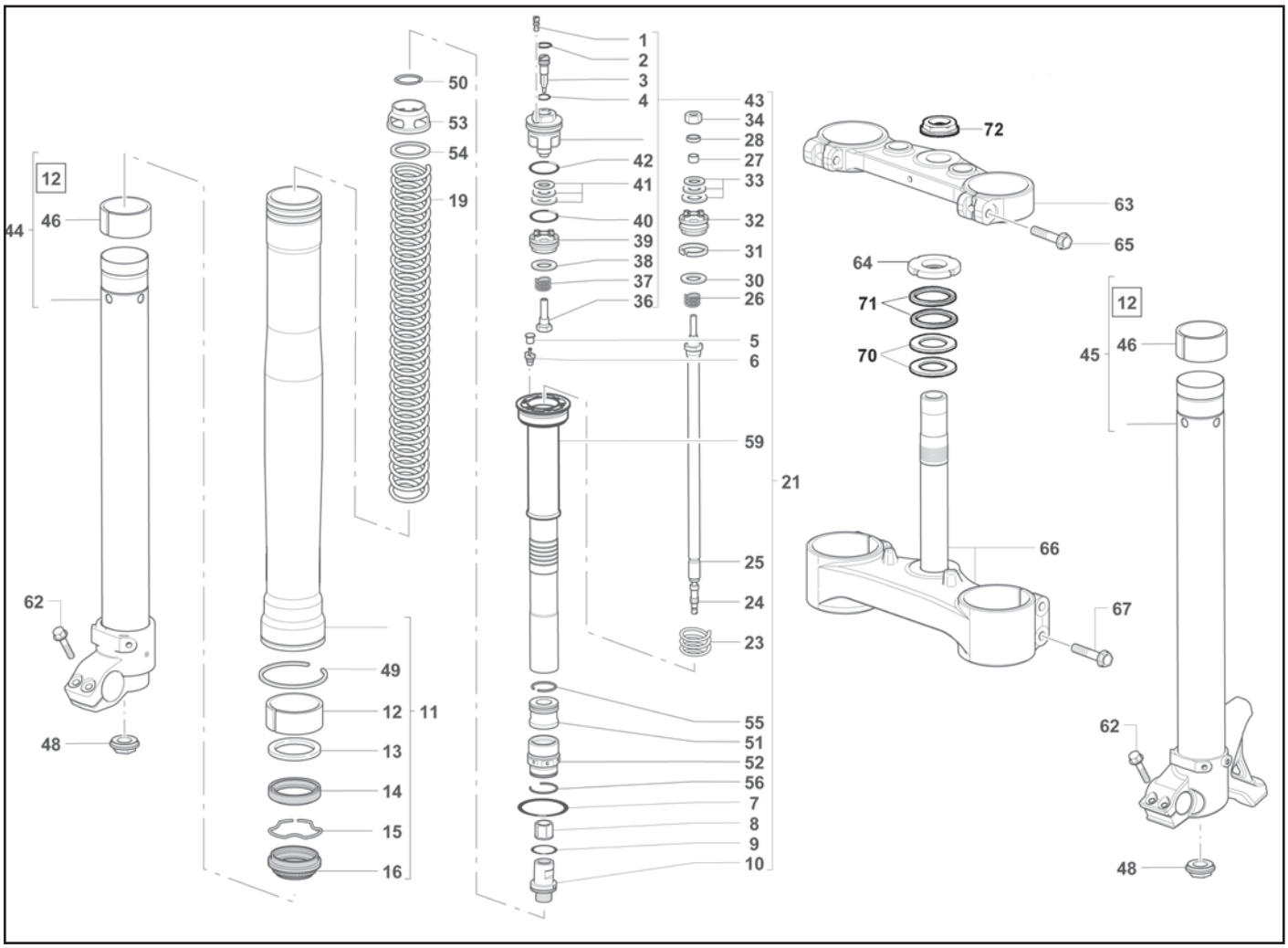

Front suspension (TC-TXC**)**
The front suspension unit is a MARZOCCHI “U.S.D.” telescopic hydraulic fork with advanced axle;the diameter of the stem is 50 mm .
The thermal excursion of the wheel on the legs axis is 300 mm.

INSTRUCTIONS FOR USE OF Ø45USD FORK (TC-TXC)

GENERAL

The telehydraulic upside down fork,with advanced axle. The fork multivalve damping system allows rebound and compression to be controlled and adjusted,it also has a spring for static load. The compression hydraulic damping is made through a special valve located in each fork's leg upper area,whereas the rebound hydraulic damping is made through a sealed cartridge located inside each stanchion. Each fork's leg is provided with external adjusters for the compression and extension adjustment. Valves for the slider inner air bleed and for the cartridge oil draining are inside each fork 's leg.

Stanchion tubes: Made of special, chromed, high-resistance steel with a special surface hardening treatment (TIN).
Sliders: Made of aluminium alloy turned on a CNC, anodized and polished inside.
Sliding bushes: With Teflon® facing, free from static friction.
Seals: Computer designed seal rings guarantee the best seal under compression and the minimum friction during rebound.
Springs: Made of steel, they are available in different stiffness (K).
Oil: MARZOCCHI oil with special formula. It eliminates the formation of foam and keeps the viscosity characteristics unchanged in any working conditions;free from static friction. For more detailed information please refer to Table 6 -Oil and quantity. For climate very cool use oil MARZOCCHI SAE 5 Art. 55 00 03.

SPRING TABLE

The static load of the fork is determined by the spring, positioned at the top of each leg: by changing either spring features or pre-load sleeve length a different suspension behavior is obtained without changing the hydraulic features. The following table describes the "spring+pipe" kit available as spare part.

COSTANTE K (N/mm)	CODICE
4,8 (TXC 250)	8000 B1690
5,0 (TC-TXC 450/510)	8000 B1716

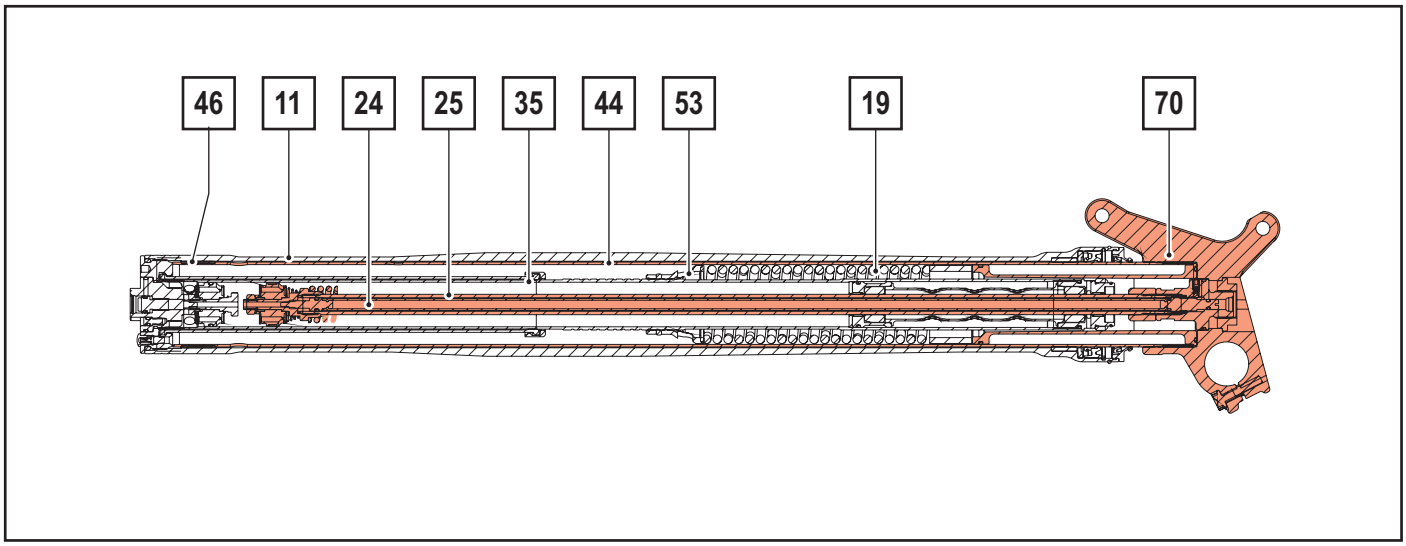

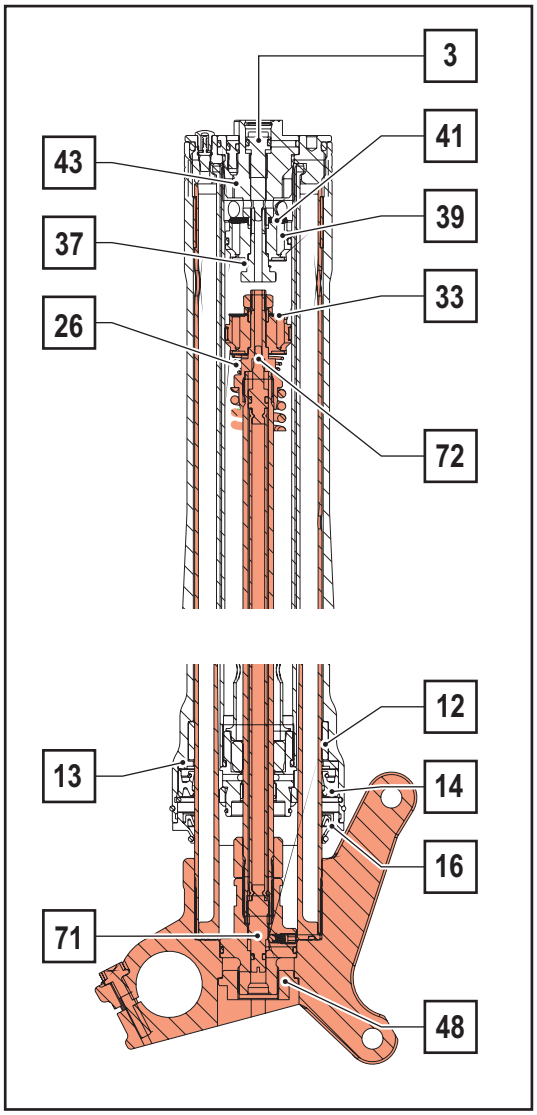

COMPONENTS OF THE FORK

The SHIVER 50 Factory Works fork is based on a multivalve damping system that is exactly the same on both fork legs.

Each fork leg is therefore a complete suspension system which you must refer to when adjusting any part of the fork.

3)Compression adjustment screw
11)Outer spider
12)Lower sliding bushing
13)Spring cup
14)Sealing ring
16)Dust seal
19)Spring
24)Inner rod
25)Rod
26/37)Washers recall spring
33)Rebound damping piston washers ’ stack
35)Body in the cartridge
39)Compression piston
41)Compression damping valve washers ’ stack
43)Compression valve
44)Stanchion tube
46)Upper sliding bushing
48)Foot nut
53)Spring preload adjustment set
70)Wheel axle clamp
71)Rebound adjustment screw
72)Rebound adjustment conic pin

In the following • gure,the moving parts holding the wheel are indicated in different colors (background highlighted)from those that remain • xed to the motorcycle frame (light background).

GENERAL RULES FOR A PROPER OVERHAULING
• After a complete breakdown,always use new,original Marzocchi seals when reassembling.
• To tighten two screws,bolts or nuts that are near each other,always follow the sequence 1-2-1 using a torque wrench;strictly follow the indicated tightening torques (see Table 5 -Tightening Torques).
• Never use flammable or corrosive solvents to clean parts as this could damage the seals. If necessary use specific detergents, preferably biodegradable, that are not corrosive, not flammable or have a high flash point, and are compatible with the materials of the seals.
• Before reassembling, always lubricate the parts of the forks that are in contact with each other.
• If you are planning not to use your fork for a long time, use the fork's oil to lubricate those components that are in contact with each other.
• Never pour away lubricants, solvents or detergents that are not completely biodegradable in the environment; these must be collected and kept in the relevant special containers, and disposed of in accordance with applicable regulations.
• Always grease the lips of each seal before reassembling.
• Use only metric tools. Never use imperial (US) tools. Imperial (US) tools with similar sizes to metric tools can damage bolts and screws, making them impossible to unfasten.
• Use the correct size and type of screwdriver to unscrew slotted or crosshead screws.
• When using a screwdriver to install or remove metal stop-rings, O-ring seals, sliding bushings or seal segments, avoid scratching or damaging the components with the tip of the screwdriver.
• Only use original Marzocchi spare parts.
• Before servicing or overhauling your forks, make sure you have the Marzocchi Overhaul Kit that corresponds you're your forks (if applicable), along with all the spare parts necessary for the complete service or overhaul of both legs.
• Work in a clean, ordered, well-lit place; if possible, avoid working outdoors.
• Carefully check that your work area is free of metal shavings and dust.
• Before servicing your forks, we recommend washing the motorcycle thoroughly, giving special attention to the forks.
• Never spray your motorcycle with water under pressure. Pressurized water, even from the nozzle of a small garden hose, can pass under seals and enter your Marzocchi forks, thereby affecting its operation. Wash your motorcycle and Marzocchi forks by wiping them down with water and natural soap.
• We recommend servicing or overhauling your fork one leg at a time.
• Never modify any component of the fork.

INSTRUCTIONS FOR CLAMPING IN THE VICE
Some maintenance procedures may require the use of a vice to hold some component of the fork.

WARNING

The incorrect use of a vice can cause irreparable damage to the fork. A damaged fork can result in an accident, personal injury or death.

Strictly follow the instructions given below.
• Limit the use of a vice to those operations where it is absolutely necessary.
• Always use a vice with padded jaws.
• Do not over-tighten the vice.
• Do not clamp parts of the fork where the slightest deformation could damage the part and cause the suspension system to malfunction.

• The figure shows the areas of the fork recommended for clamping the fork in a vice.

A - Wheel axle clamp.
B - Slider in the steering crown fixing zone.
C - Compression valve spanner seizing.
D - Cartridge in the tube-sleeve spanner seizing zone.

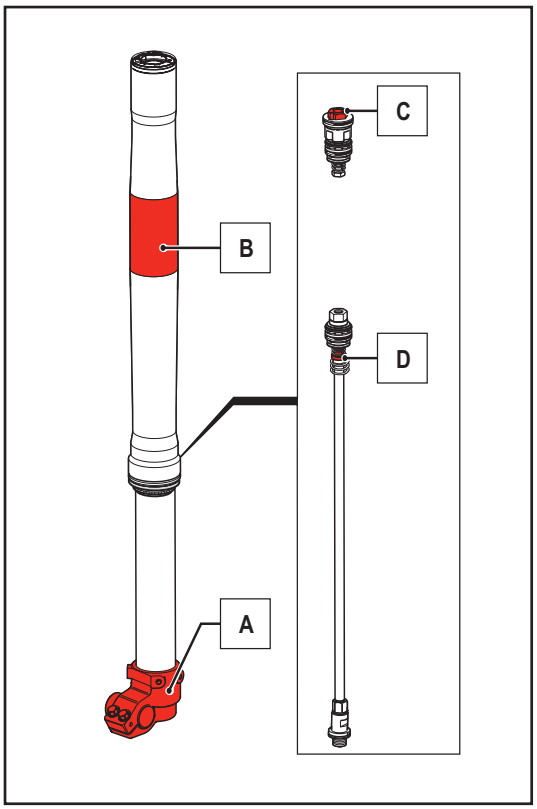

Issues - Possible Causes - Solutions

This section describes some of the issues that may arise during the working life of the fork.
For each issue listed, a possible cause is identified and a possible solution is given. Always consult this table before working on the fork.

ISSUE	CAUSE	SOLUTION
Oil leaking from the sealing ring	1. Worn sealing ring	1. Replace the sealing ring
	2. Scratched stanchion tube	2. Replace the stanchion tube and the sealing ring
	3. Dirty sealing ring	3. Replace the sealing ring,the dust seal and the oil
Oil leaking from the bottom of the fork leg	1. O-ring seal of the rebound screw adjuster damaged	1. Replace O-ring
	2. Rebound adjuster loose	2. Tighten the rebound adjuster
Loss of sensitivity	1. Sliding bushes worn	1. Replace the sliding bushings
	2. Old oil	2. Change the oil
Fork legs not sliding properly	1. Fork legs not aligned correctly	1. Replace any bent or damaged parts
The fork does not react to adjustment variations	1. The pin inside the rod is stuck	1. Clean or replace rod
	2. The adjustment screw is stuck	2. Take off and clean adjustment screw
	3. Impurities in the oil	3. Change the oil making sure the forks ' inside components are properly cleaned
	4. Valves are blocked with impurities	4. Change the oil making sure the forks ' inside components are properly cleaned
Fork is too smooth with any adjustment	1. Oil level too low	1. Re-establish correct oil level
	2. Oil viscosity too low	2. Replace the oil with a higher viscosity one
	3. Too soft or damaged spring	3. Replace the spring
Fork is too stiff with any adjustment	1. Oil level too high	1. Re-establish correct oil level
	2. Oil viscosity too high	2. Replace the oil with a higher viscosity one
	3. Too hard spring	3. Replace the spring

Periodical Maintenance Table

	Use			
	Intense		Normal	
	Off-road	Road	Off-road	Road
Check that screws are tightened to required torque	Before every ride			
Clean the dust seal	After every race	After every race	After every ride	After every ride
Change the oil	6 hours	20 hours	30 hours	60 hours
Replace the sealing rings	6 hours	20 hours	30 hours	60 hours

If the fork is used on mudded or sandy grounds, the maintenance operations shall be carried out more frequently 30% .

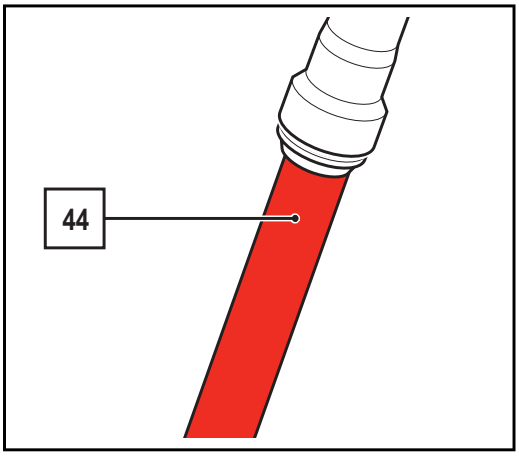

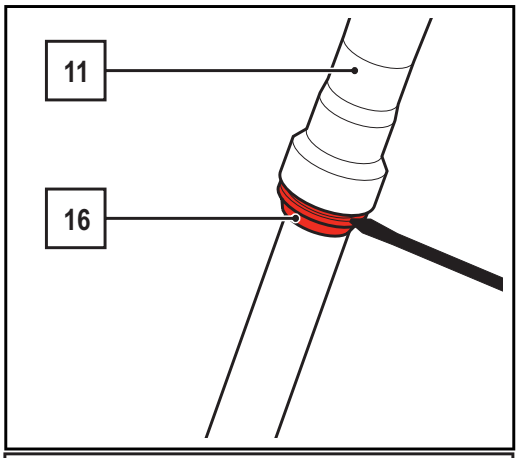

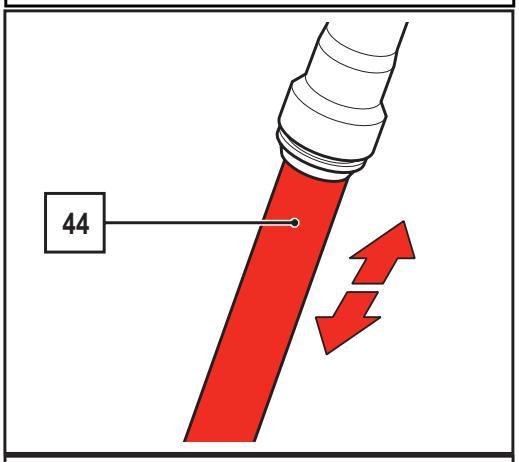

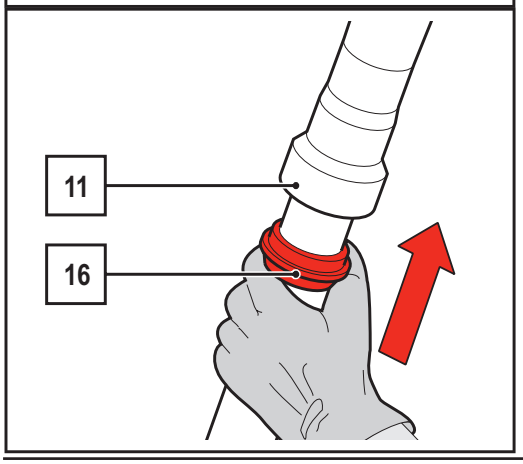

CLEANING THE FORK LEGS

This operation can be carried out with the fork installed on the motorcycle.

Marzocchi lubricates the dust seals of its forks with grease to help the stanchion tubes slide easier, particularly when the forks have not been used for a long period of time.
Use of the forks can melt the grease, causing it to stick to the stanchions, and give the appearance of an oil leak.
Inspect the forks to ensure that this is not the result of an oil leak. After every use, carefully clean the fork's outside surfaces, with special attention to stanchion tubes and dust seals.

WARNING
If your forks develop an oil leak,do not ride your bike.
Correct the leak before you ride again.

Dismantling
• Carefully clean the stanchion tube (44) before carrying out this operation.
• Using a small screwdriver, prize the dust seal (16) off the slider (11) without scratching or damaging the stanchion tube and the slider.
• Slide the dust seal along the stanchion tube. Clean inside the dust seal and its seat on the slider with a jet of compressed air.
• Lubricate the dust seal and the visible surface of the sealing ring with silicon grease.

WARNING
Insects can stick to the surface of the legs during use,they can cause serious damage to the suspensionsystem if not quickly removed.

WARNING
Never use metal tools to clean any particles of dirt.

• Compress the fork legs slightly and remove any traces of dirt from the stanchion tubes (44).
• Remove any oil/grease and traces of dirt with a soft cloth.
• Lubricate the dust seal and the visible surface of the sealing ring with silicon grease.

Re-assembly
• Slide the dust seal (16) onto the slider (11), and press it into its housing with your hands.

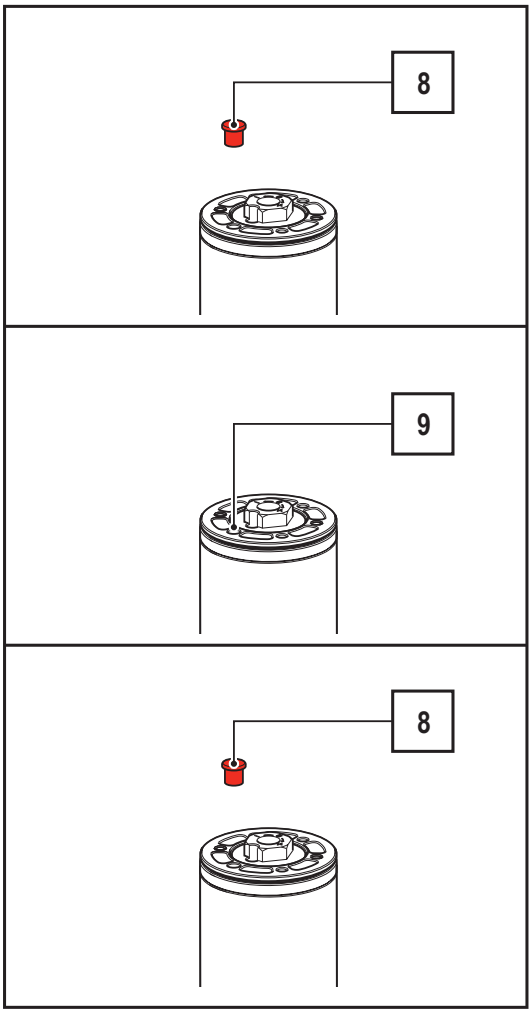

Bleeding the air

This operation must be carried out with the fork's legs fully extended and fork dismantled or with fork installed on the motorcycle and with the front wheel off the ground.

The pressure generated by the air that can get into the fork legs while the motorcycle is being used and which, due to the special shape of the sealing rings remains trapped inside, can cause the fork to malfunction.

It is necessary to discharge the air in both fork legs monthly or after every race.
Bleed the air when the fork leg SAG is less than that set otherwise the suspension tends to become hard following the increase in pre-load due to air pressure.
To carry out this operation you will need a small pin punch.
The air bleed valve is on the top caps of both legs.
If the fork is not operating at optimum levels, or if there is a loss in the smoothness of the fork, please carry out following operations:

• Remove the protection cap (8).
• Using a small pin punch, press on the air valve (9) and completely discharge the internal pressure from the leg.
• Refi t the protection cap (8).

Draining the oil

WARNING
This operation cannot be carried out with the fork installed on the motorcycle.

We recommend loosening the fork cap a little before removing the fork leg from the fork yokes.

• Remove the fork leg from the steering crowns according to the procedure in the motorcycle owner's manual.

• Clamp the fork leg (11) in the vice.

• Remove the lock cap (1) from the fork leg using a 4mm open-ended spanner.

• Slowly lower the slider (11) on the stanchion tube.

• Free the fork leg (11) from the vice and tip it into a container of a suitable size to drain the oil; pump the fork to help the oil flow out.

Check appearance, density and quality of the old oil to get an idea of the condition of the sealing and guiding elements. If the oil is dense and dark with solid particles in it you will have to replace the guide bushes and the sealing elements.

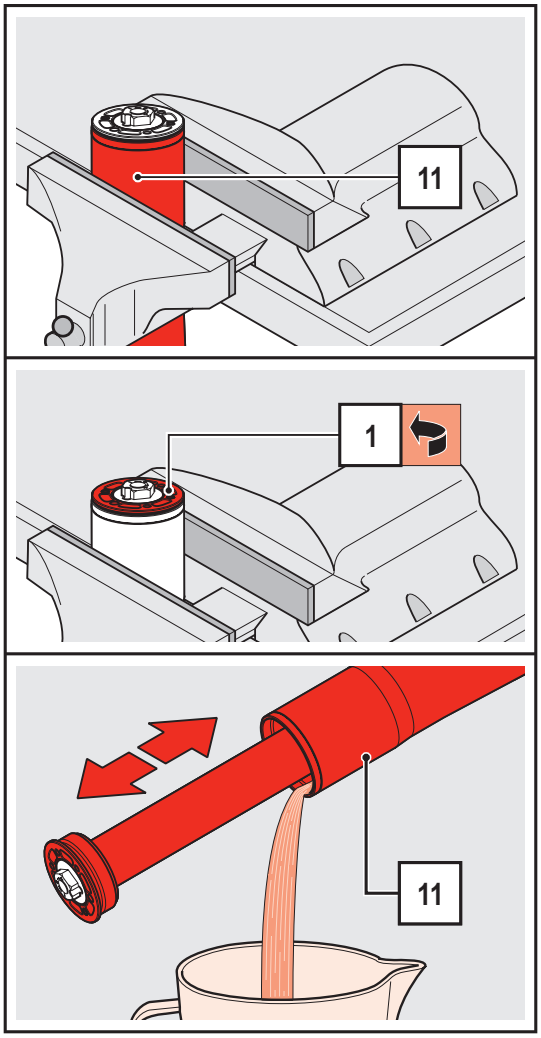

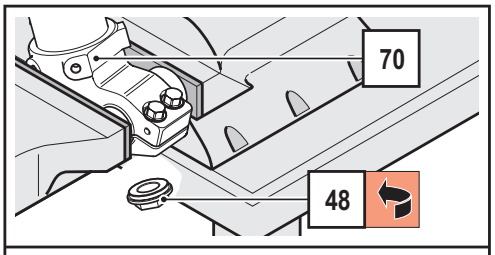

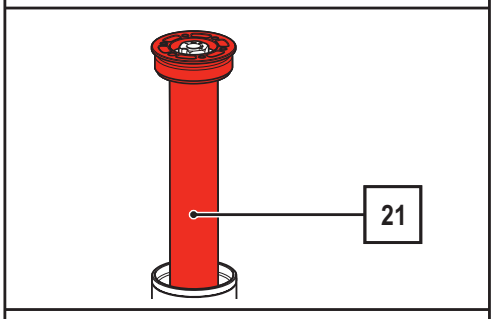

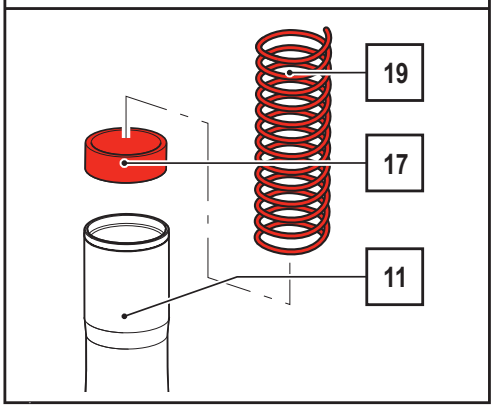

REMOVING THE CARTRIDGE UNIT

WARNING!
This operation must be done only after having drained allof the oil out of the fork leg.

- Clamp the wheel axle clamp (70) in the vice.
- Unscrew the lower cartridge nut (48) with a 21 mm socket wrench.
- Remove the lower cartridge nut (48).
- Pull the cartridge (21) off the stanchion.

- Remove the spring (19) and the pre-load spacer (17) from inside the slider (11).

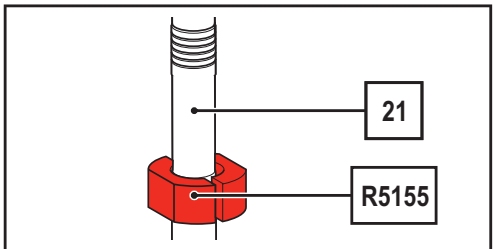

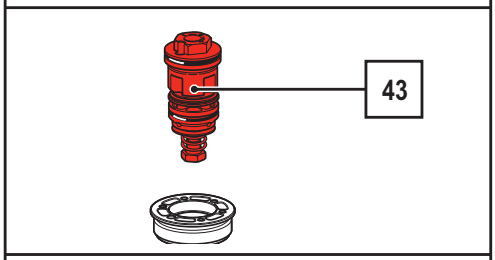

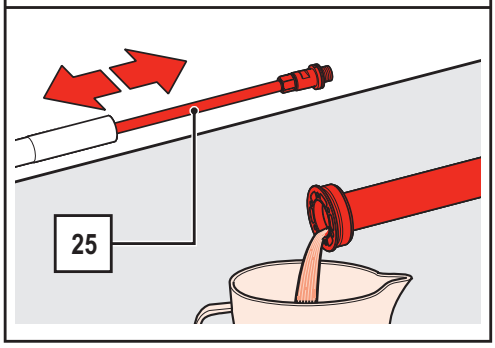

OVERHAULING AND MODIFYING THE CARTRIDGE UNIT AND COMPRESSION VALVE SETTING

Breaking down the cartridge

- Rotate the rebound adjuster in fully closed position (rotate it fully clockwise).

- Fix the cartridge set (21) in the vice by means of the special protection jaws (R5155), as shown in the figure.

- Use a 21mm spanner to unscrew the compression valve unit (43).

- Remove the complete compression valve unit (43).

- Free the cartridge set from the vice and rotate it into a container of a suitable size to drain the oil; pump the fork to help the oil flow out while pushing the pumping element rod (25) forwards and backwards. Fully compress the fork a few times.

• Fix the rebound adjuster set (24) with a 17 mm open-ended wrench and unscrew the locknut (27) with another 17 mm open-ended wrench.

• Remove the rebound adjustment set (24) and the locknut (27) from the pumping element rod.

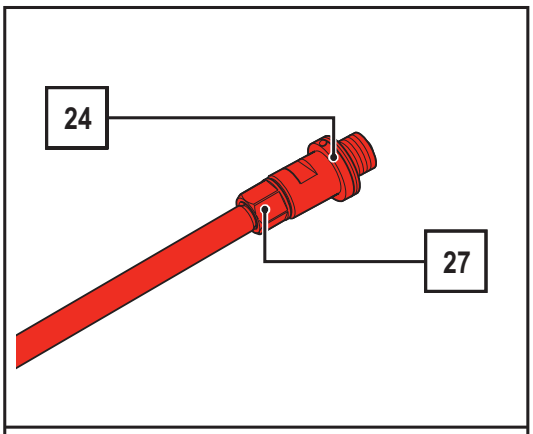

• Apply some stretched adhesive tape onto the end of the rod (25) in order to cover the rod threading. Do not apply thick adhesive tape.

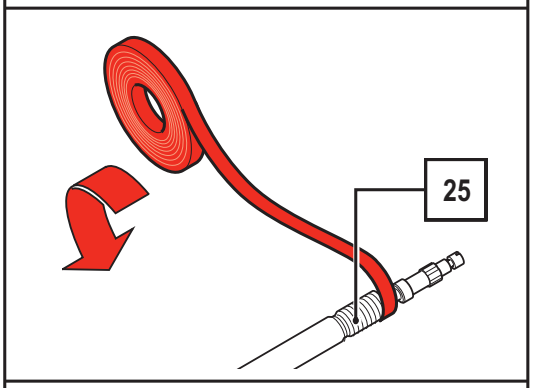

• Push the rod (25) towards the cartridge, up to removal.

The pumping element and the compression valve can be completely overhauled and re-used. Section 4.7.2/4.7.3 explains the overhauling and setting procedure for the pumping unit and the compression valve.

• Check the piston segment for wear.

Section 4.7.4 explains the procedure for re-assembling the cartridge unit and compression valve

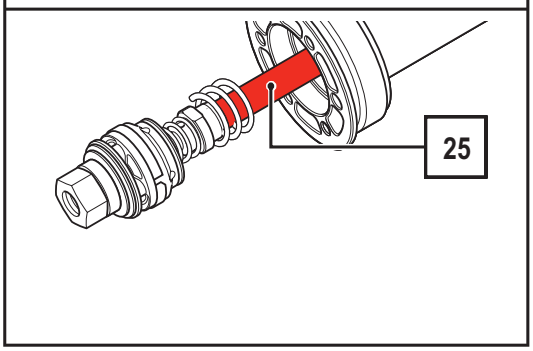

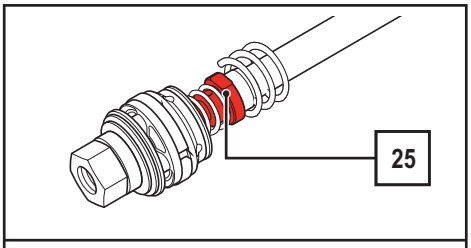

CHECKING THE REBOUND ADJUSTING UNIT

Dismantling

• Push the rebound spring back from the end part of the rod.

• Being very careful not to damage the washers, clamp the end of the rod (25) in the vice, exploiting the 17 mm spanner's grip and without over-tightening.

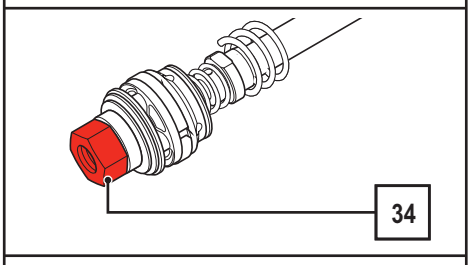

• With a 10 mm spanner, unscrew nut (34).

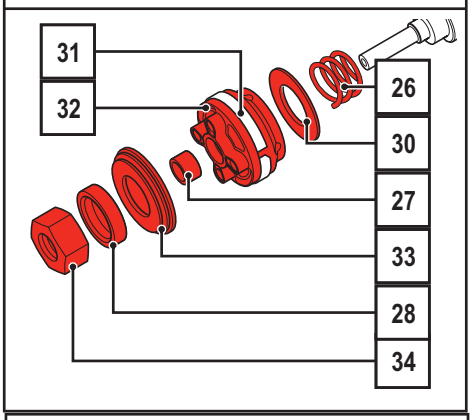

• In sequence, remove the nut (34) the calibrated spacer (28), the washer or the washers' stack which regulate rebound (33), the washer centering bush (27), the piston (32) complete with segment (31), the by-pass washer or by-pass washers' stack (30) and the spring (26).

Assembly

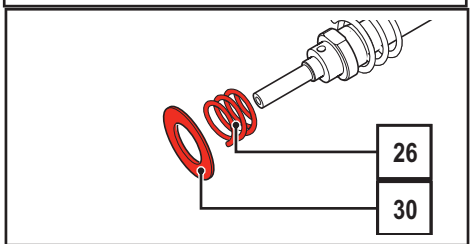

Washers (33) and piston (32) are responsible for the rebound braking. Replacing washers (33) and piston (32) with other parts with different characteristics, lets you change the fork behaviour during rebound if needed. The by-pass washers (30) are responsible for rebound braking. Whenever necessary, fork behaviour can be modifi ed during compression by replacing the washers (30) with others having different features

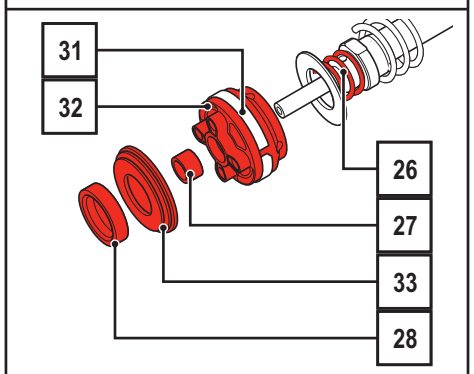

WARNING
Use only Marzocchi original washers and pistons. Do notmodify the components.

• Replace the piston segment (31) if needed.
• In the end part of the rod, fit the spring (26) and the washer or the by-pass washer stack (30).
• Compress the spring and insert the following items in sequence: piston (32) with its segment (31), the washer centring bushing (27), the washer or the washer stack allowing to adjust extension (33), the calibrated spacer (28).

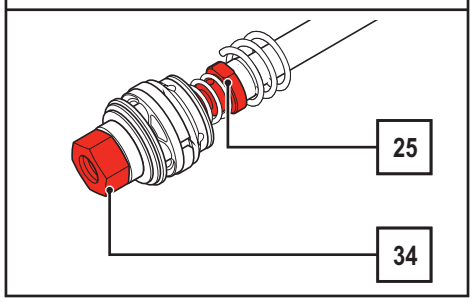

WARNING
As shown in the diagram, the piston (32) must bepositioned so that the cylindrical part is opposite thewashers which regulate estension.
• Tighten the nut (34) by hand.
With a 10mm spanner, tighten the nut (34) to the required torque (see Table 5 - Tightening torques).
• Remove the pumping element rod from the vice (25).

COMPRESSION VALVE OVERHAULING

Dismantling

• Being very careful not to damage the washers, clamp the compression valve (43) into the vice, exploiting the parallel surfaces and without over-tightening.

• With a 12 mm spanner, unscrew nut (36).

• In sequence, remove the nut (36), the spring (37), the by-pass washer (38), the piston (39) with O-ring (40) and the washer or washers' stack which regulate compression (41).

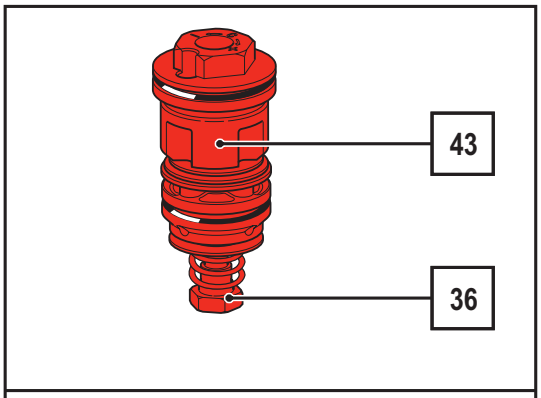

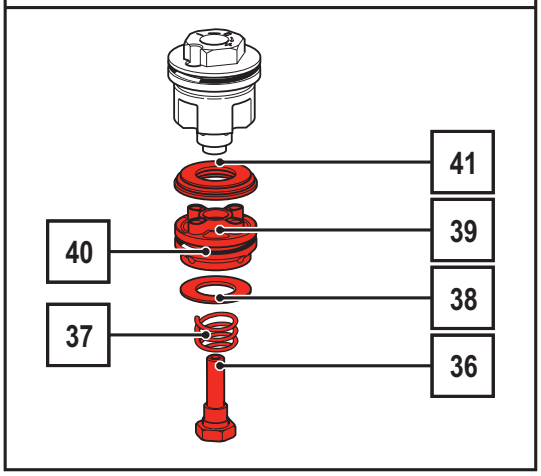

Assembly

Washers (41) and piston (39) are responsible for the compression braking. Replacing washers (41) and piston (39) with other partswith different characteristics, lets you change the fork behaviour during compression if needed. The by-pass washers (38) are responsible for rebound braking. Whenever necessary, fork behaviour can be modified during compression by replacing the washers (38) with others having different features

WARNING
Use only Marzocchi original washers and pistons. Do not modify the components.

• Replace the piston O-ring (40) if necessary.

• Install the washer or washers' stack which regulate compression (41) and the piston (39) with O-ring (40) onto the bottom valve.

• Insert the spring (36) and the by-pass washer (37) into nut (38).

• Keeping the spring compressed, tighten the screw (36) onto the compression valve (43) being very careful that it goes right into its housing and the washer is free to run its course.

WARNING
The piston (39) must be positioned as shown in the diagramso that the cylindrical part is opposite the washers which regulate compression.

• Tighten the screw (36) by hand.

• Clamp the compression valve (43) in the vice without tightening.

• With a 12mm spanner, tighten the screw (36) to the required torque (see Table 5 - Tightening torques).

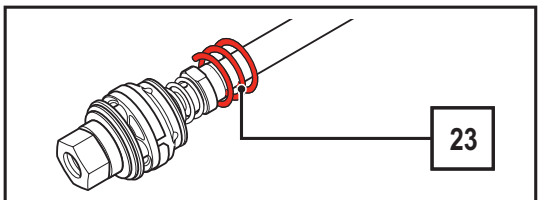

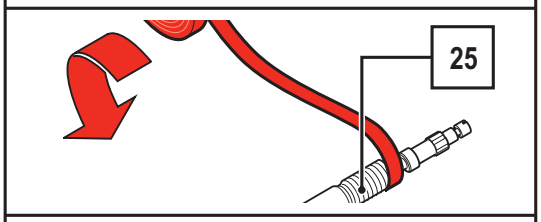

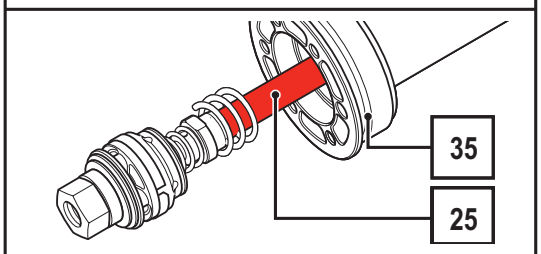

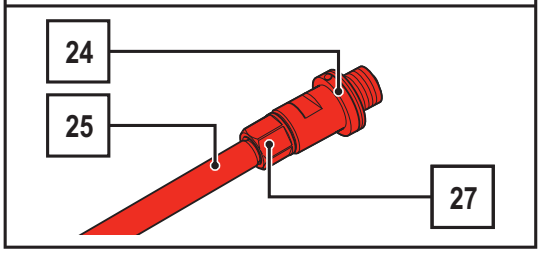

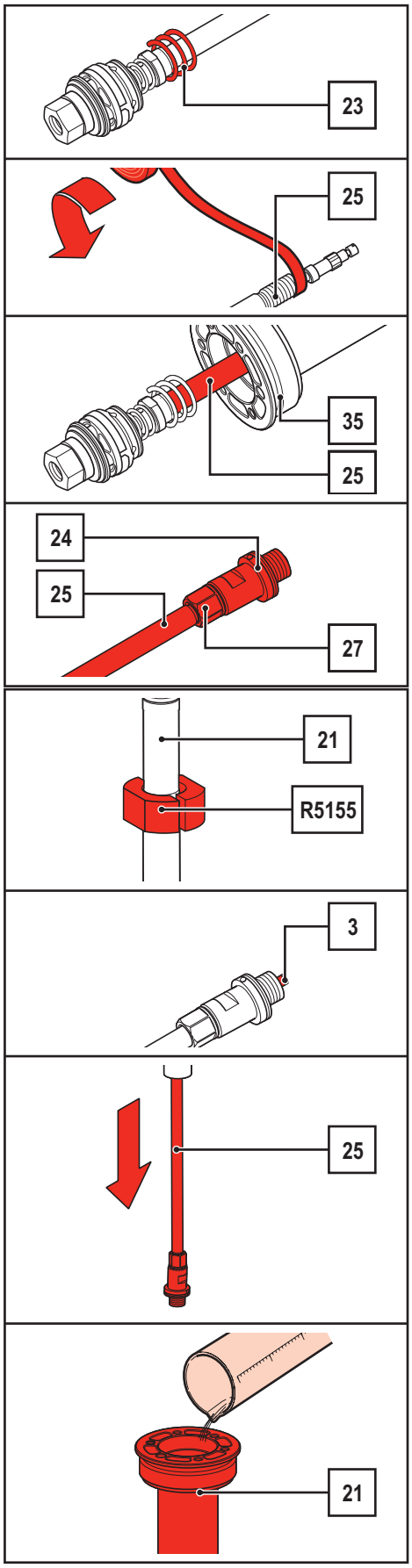

RE-ASSEMBLING THE CARTRIDGE UNIT

• Insert the spring (23) in its seat on the rod.

• Apply some stretched adhesive tape onto the end of the rod (39) in order to cover the rod threading. Do not apply thick adhesive tape.

• Grease the rod and lubricate the sealing rings.

• Insert the piston rod (25) into the sleeve (35).

In both pumping elements there is a sealing segment; before re-assembling make sure that it is not worn or damaged. Replace if necessary. Take great care and if necessary use a small flat-tip screwdriver to help the piston of the pumping element into the pumping element tube-sleeve. Insert the piston without any interference.

• Remove the adhesive tape from the rod's upper edge (25).

• Rotate the rebound adjuster in fully closed position (rotate it fully clockwise).

• Tighten by hand the locknut (27) and the rebound adjustment set (24) into the rod threaded area (25).

• Fix the rebound adjuster set (24) with a 17 mm spanner and screw the locknut (27) with another 17 mm spanner to the required torque (see Table 5 – Tightening torques).

• Fix the cartridge set (21) in the vice by means of the special protection jaws (R5155), as shown in the figure.

• Set the rebound adjuster (3) to 15 clicks from fully closed position.

• Pull the pumping element rod (25) completely in the configuration of maximum extension.

• Fill the cartridge case (21) with oil to about 20 mm from the upper edge.

Push the rod for a few times and the cartridge body with some oil up to approx.20 mm from the body top.

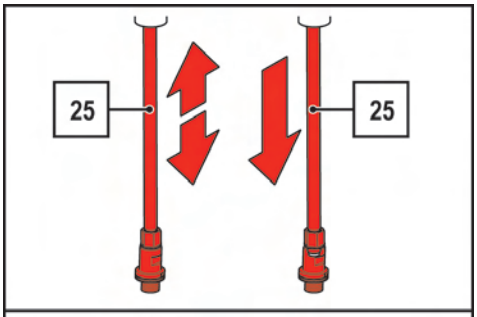

Screw the oil draining screw (1)in the compression valve unit (43)

Seal the cartridge end hermetically by screwing the compression valve (43)and make the rod (25)perform a full stroke;after completing this operation,when the rod is completely extended,you will see that the bladder tends to compress next to the 4 radial holes in the tube sleeve.

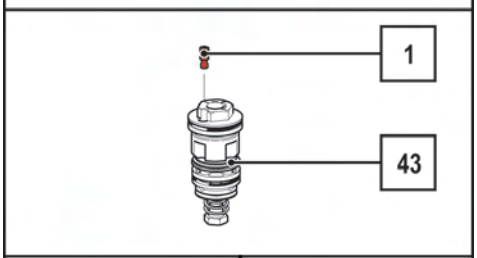

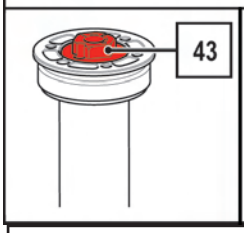

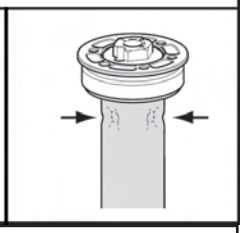

Insert the rod (25) slowly by about 50mm until the bladder is no longer compressed next to the 4 holes.

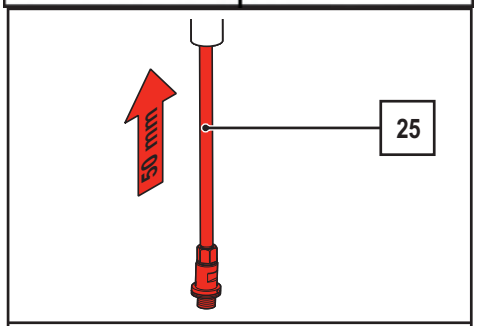

Free the cartridge from the vice.

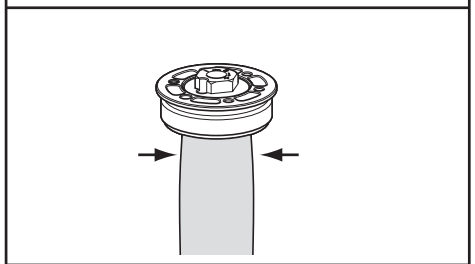

Fix the cartridge in the vice by means of the special protection jaws (R5198AC) so that the 4 holes on the bladder are sealed; the jaws must be in contact with the upper cap, as shown in the figure.

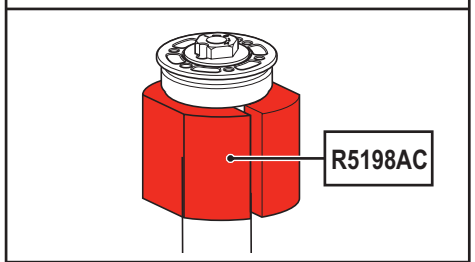

Unscrew the compression valve (43).

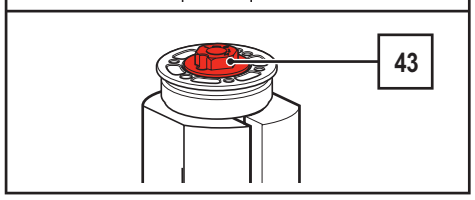

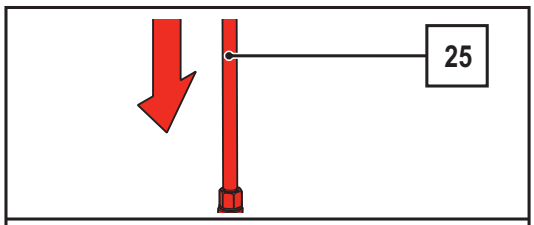

Pull the rod (25) to the position of maximum extension and top up oil to the edge

Set the compression adjuster to 15 clicks from fully closed position.

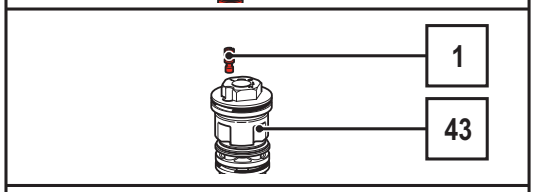

Unscrew the oil draining screw (1) in the compression valve unit (43)

Screw the compression valve unit until the external O-ring seals inside the cap body.

Tighten the oil draining screw to the required torque (see Table 5 – Tightening torques).

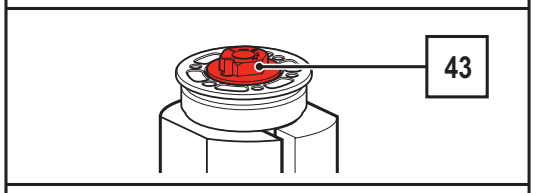

Free the cartridge from the vice.

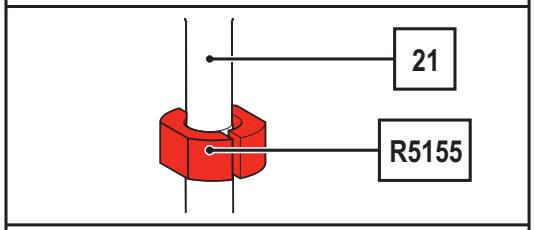

Fix the cartridge set (21) in the vice by means of the special protection jaws (R5155), as shown in the figure.

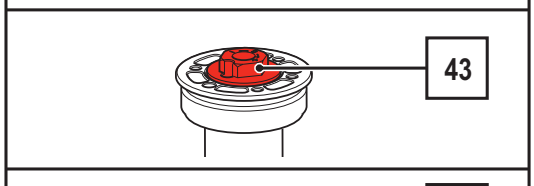

Screw the compression valve unit and tighten it to the required torque (Tightening torques) with a 21 mm open-ended wrench.

Check the correct oil filling.

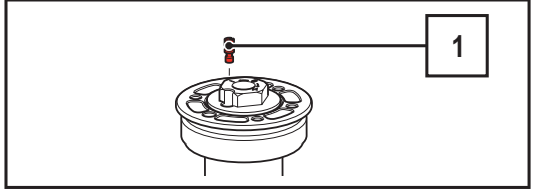

To check, make the rod perform a few full strokes and make sure that the smoothness is uniform and that the rubber bladder, with the cartridge rod in completely extended position, is slightly inflated; otherwise add a few cc of oil and drain again. Poor filling is clearly visible because when the cartridge is completely extended, the bladder is compressed in the presence of the 4 radial holes for the cartridge oil passage.

BREAKING DOWN THE FORK LEG - SLIDER AND REMOVING THE SEALING RINGS

Remove the dust seal (16) from its seat, using a small flat-tip screwdriver.

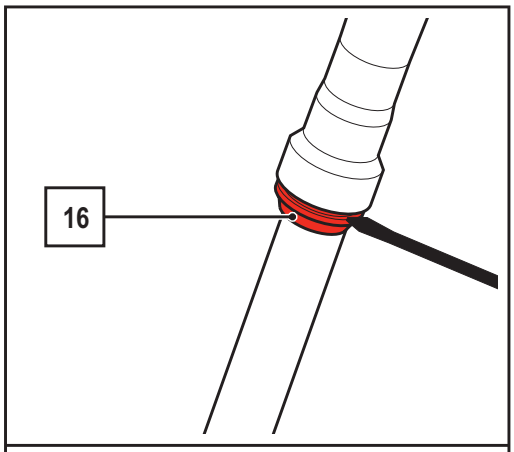

With the same screwdriver remove the metal stop ring (15).

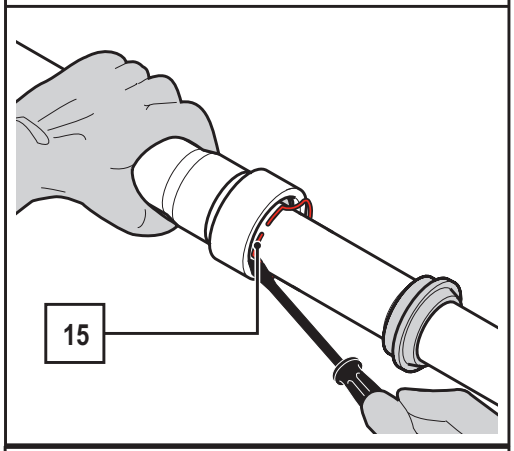

Pull the stanchion tube (44) out of the slider (11); to separate these two elements you will have to pull hard.

With this operation the sealing ring (14), the spring cup (13) and the bottom guide bushing (12) will be removed from the slider.

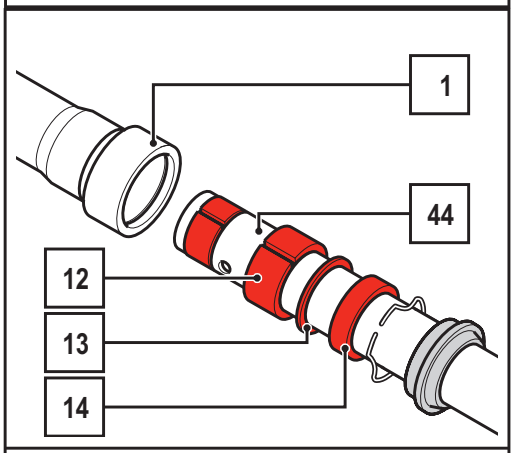

Remove the top guide bushing (46) by hand.

If this operation is difficult by hand, use a flat-tip screwdriver in the bushing groove.

Remove the bottom guide bushing (12), the spring cup (13), the sealing ring (14), the stop ring (15) and the dust seal (16) from the stanchion tube.

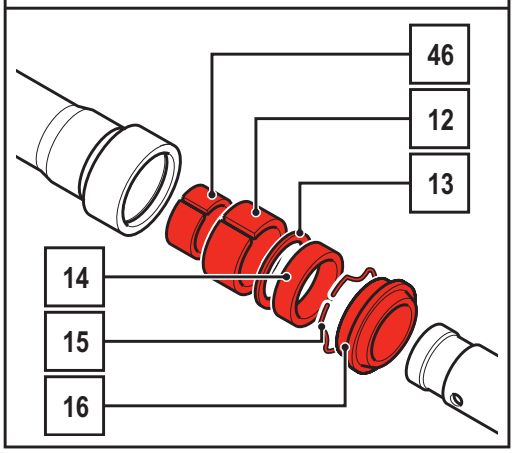

WARNING
The old sealing rings and dust seals must not be used again.

Paragraph 4.9 describes the procedure for assembling the sealing elements and reassembling fork leg and slider.

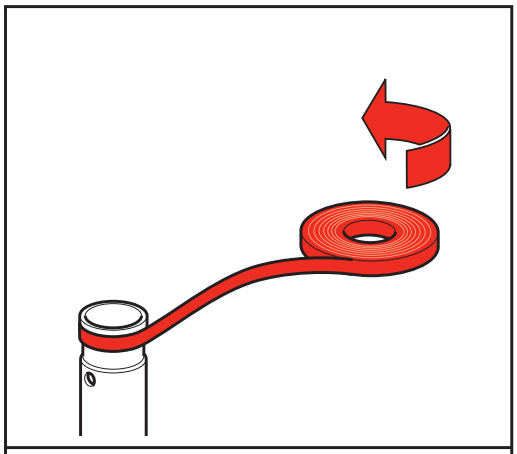

RE-ASSEMBLING THE FORK LEG - SLIDER AND SEALING RINGS

WARNING

The old sealing rings and dust seals must not be used again. Before re-assembling, check the conditions of the guide bushings; replace them if they are scratched or grooved. Check the Teflon® coating of the guide bushings which must be in a good condition.

Apply some adhesive tape to the end of the stanchion tube so that it covers the seat of the top bushing.

Smear the dust seal and the sealing ring with some grease.

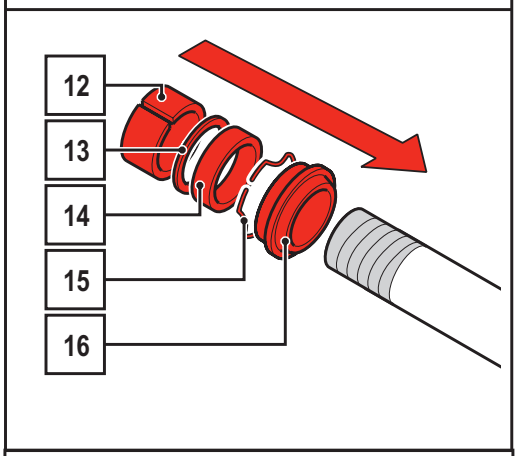

• Insert the following components in the stanchion tube in this order: dust seal (16), stop ring (15), sealing ring (14), spring cup (13) and bottom guide bushing (12).

WARNING

Make sure the sealing ring (14) is correctly oriented in a way that the hollow side is turned towards the spring

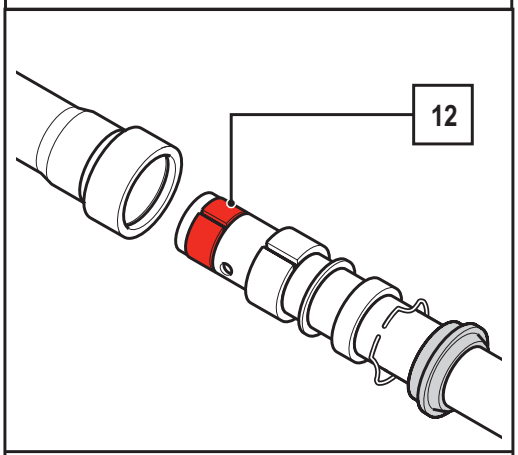

Remove the adhesive tape from the end of the stanchion tube, cleaning any traces of adhesive left on the fork.

Insert the top guide bushing (12) by hand.

If this operation is difficult by hand, use a flat-tip screwdriver in the bushing groove.

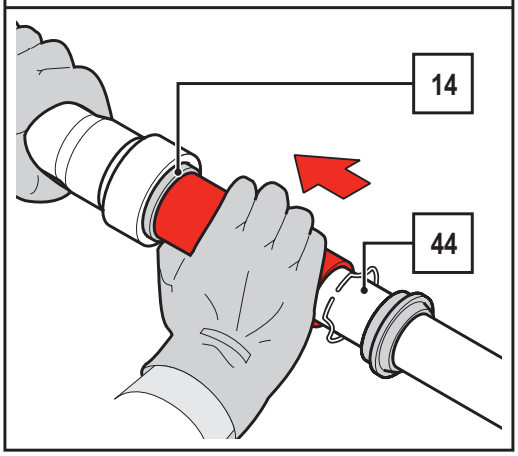

Delicately introduce the stanchion tube into the slider, being very careful not to damage the top guide bushing.

Guide the bottom guide bushing until it comes into contact with the slider, the spring cup and the sealing ring.

Mount the special introducer on the stanchion tube (44) and use this, by pushing on the sealing ring (14), to insert the bottom guide bushing, the spring cup and the sealing ring.

Mount the stop ring (15) using a small flat-tip screwdriver, checking it fits perfectly into its groove and being a careful not to scratch the stanchion tube.

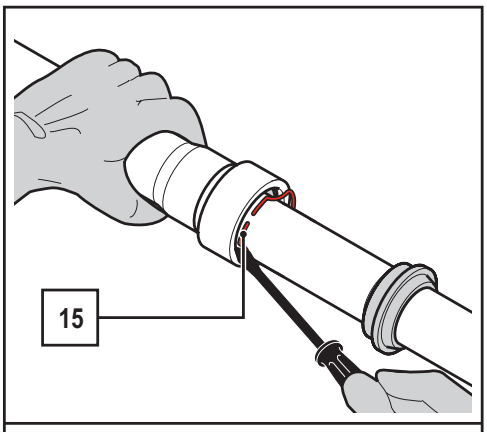

Re-assemble the dust seal (16) in its seat, pressing it home with your hands.

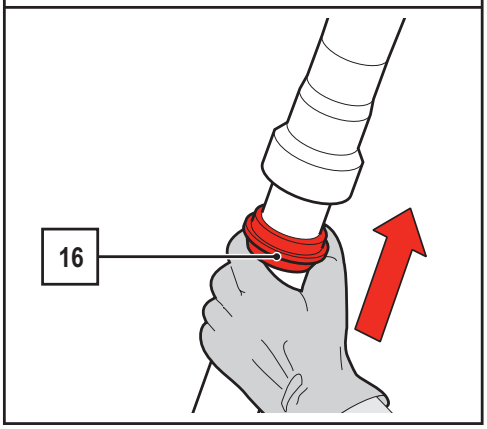

RE-ASSEMBLING THE CARTRIDGE

Insert the pre-load spacer (17) and the spring (19) inside the stanchion tube.

It is possible to modify the spring preload value by following the instructions given in paragraph 5.2.

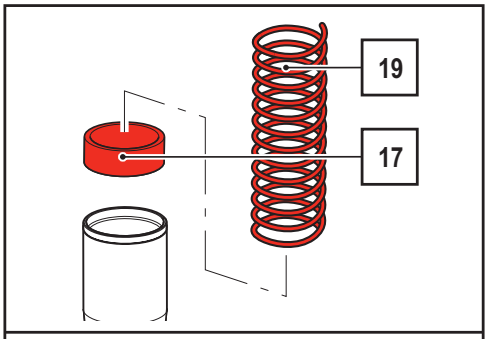

Insert the complete pumping unit (21) into the slider (11).

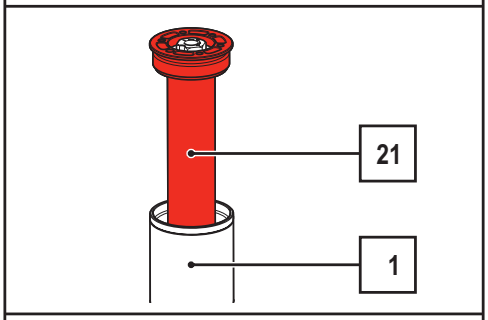

Clamp the fork leg in the vice by the wheel axle clamp (70).

Push the top cap so that the lower part of the cartridge comes out of the wheel axle clamp.

Tighten the bottom nut (48) and fasten it at the required torque (see Table 5 - Tightening torques) with a 21 mm socket wrench.

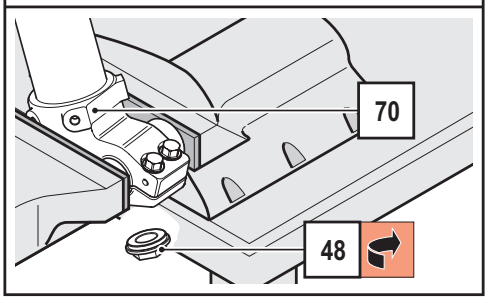

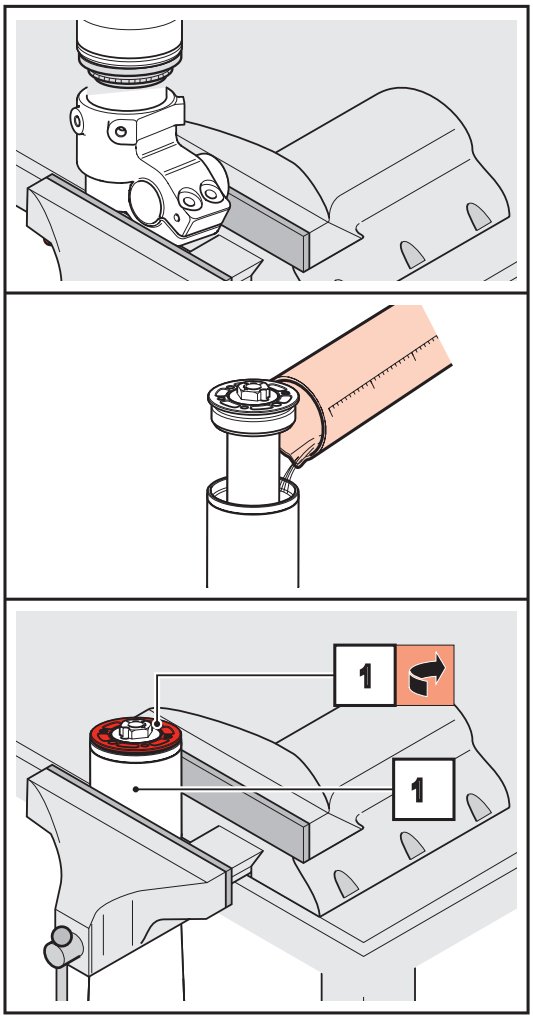

FILLING WITH OIL

Because the oil level inside the fork is not known, topping up should be done only after disassembling and removing the fork (see par. 4.8).

Clamp the fork leg in the vice in a vertical position.

Lift the slider on the stanchion tube up to 50 mm from the cap.

Prepare the quantity of oil to pour into the fork leg in a graduated container.

OIL AMOUNT FOR EACH STEM:
310cm^3

Versare all'interno del portastelo (11) la quantità di olio raccomandato.

A lower or higher volume of oil, or a type of oil other than the recommended type can change the behaviour of the fork in every phase.

Lift the slider completely on the stanchion tube.

• Use the 4mm open-ended spanner to tighten the cap (1) onto the slider at the recommended torque (see Table 5 - Tightening torques).

• Re-adjust (see p. I.45).

FITTING THE FORK BACK ON THE MOTORCYCLE

WARNING
Fit the fork back onto the frame following the instructions inthe motorcycle manufacturer's manual, as for the steering elements, brakes and wheel. The incorrect assembly ofthese elements can be dangerous for the rider.

For the fork to work correctly, the wheel must be installed on the fork as follows:

Insert the axle through the right wheel axle clamp, the wheel and the left wheel axle clamp.

Screw down the nut on the left side of the axle and tighten fully.

Tighten the two bolts on the left wheel axle clamp following the sequence 1-2-1 (see Table - Tightening torques).

Tighten the two bolts on the right wheel axle clamp following the sequence 1-2-1 (see Table 5 - Tightening torques).

ADJUSTMENTS

Obtaining the maximum performance from your suspension system depends on using the correct settings and making the proper adjustments. This section describes how to properly set and make adjustments to your Marzocchi suspension system.

In order to find the best settings for you, you will need to try several times to understand where and how to make adjustments.

When doing so, please ride in an open area, free from traffic, obstacles and other hazards.

The best settings not only depend on the Motorcycle frame geometry, the rider's weight and the types of trail or obstacles, but also on many other personal factors connected with your riding style.

Therefore, it is not possible to provide you with objective information concerning your desired settings.

Changing the settings on your suspension system must be done on only one adjuster at a time, taking note of the modifications you carry out and the improvements you obtain.

WARNING
During the setting operations, never force the adjusterspast their limits.

INITIAL SUSPENSION BOTTOMING ADJUSTMENT

Optimal spring hardness is that which reaches the required SAG, in other words, the suspension is lowered solely due to the rider's weight.

How to measure SAG
In order to measure the SAG, you only need to carry out the following steps: Pick up the front of the motorcycle so that the wheel is off the round, measure the part of the leg between the edge of the wheel axle clamp and the dust seal, then take note of the value as "H1".

• Repeat the measurement with the motorcycle in a vertical position with both wheels on flat round then take note of the value as "H2".

SAG = H1 - H2

The optimal SAG is equal to 25 - 40 mm (based on the motorcycling activity).

When you have a value that is lower than recommended, you must reduce the pre-load or replace the spring with a "softer" one to obtain the best performance from the suspension, vice versa when the value is higher it is necessary to increase the pre-load or install a "harder" spring.

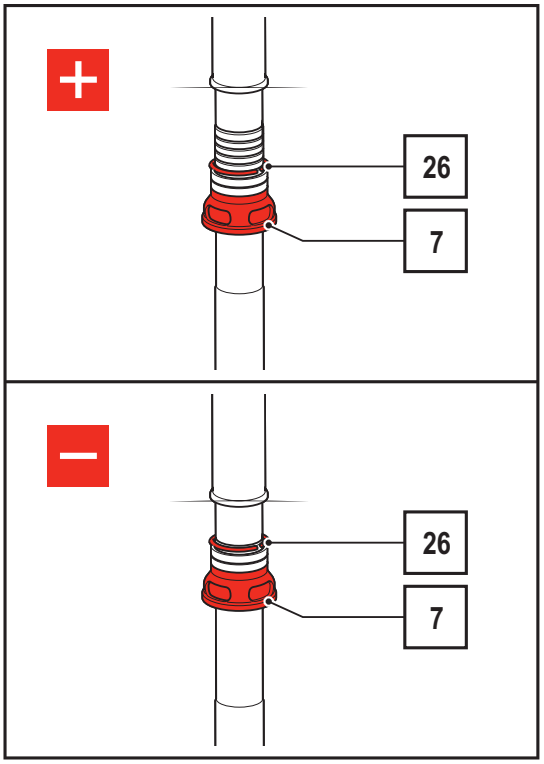

SPRING PRELOAD ADJUSTMENT

The spring preload adjustment can be done following the procedure here below described, after disassembly of the cartridge set from the fork's leg interior (see par. 4.6):

Slide the preload adjustment set (7) towards the cartridge lower edge, so that the metal ring seat becomes uncovered.

Using a small flat-tip screwdriver remove the metal ring (26) from its seat.

By changing the metal ring position as to the seats, you will preload the spring more or less, with 5 mm- increase/ decrease (see figure).

WARNING
During extraction and re-insertion of the metal ring, be very careful not to damage the components. If the cartridge and more specifically the metal ring are damaged, even in a light way, do not use the fork in any case and immediately contact an authorized Marzocchi service center. Do not alter the metal ring.

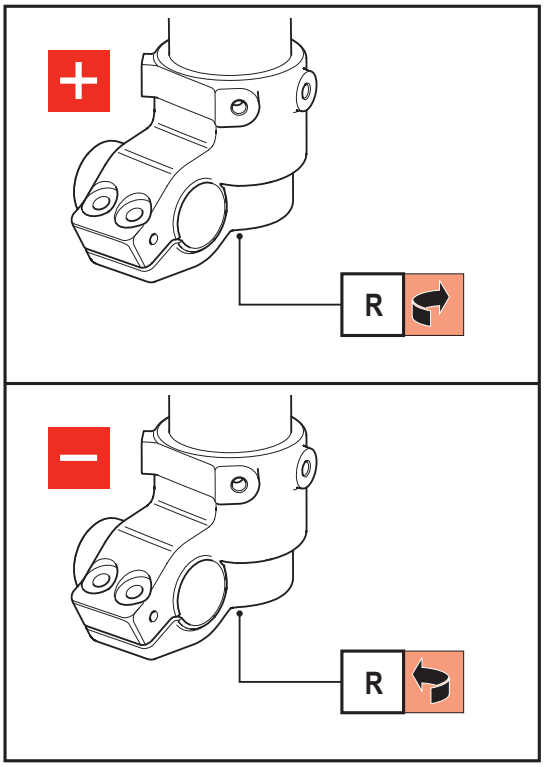

REBOUND ADJUSTMENT

Adjust extension (or rebound) braking by turning the adjuster (R).
With the rebound adjuster you can control suspension return speed after compression.

The regulating adjuster is on the lower part of the wheel axle clamp in both legs.

The right rebound speed setting makes the vehiclestable letting it follow the variations in the terrain and any obstacles.

Una corretta taratura della velocità di estensione permette di ottenere un mezzo stabile in grado di copiare fedelmente con la ruota gli ostacoli del terreno.

To modify the rebound braking adjustment, always start from the "fully closed" position (the screw is fully turned clockwise). Each screw position can be recognized by a "click". .

Carry out regulation by turning the adjuster with a flat-tipped screwdriver.

• Turning the adjuster (R) clockwise increases the rebound hydraulic damping making the fork slower during the rebound phase.

• Turning the adjuster (R) counter-clockwise decreases the rebound hydraulic damping making the suspension more responsive during the rebound phase.

WARNING
Do not force the adjuster past its limits.

COMPRESSION ADJUSTMENT

The compression adjustment can be made by by turning on the adjuster (C).

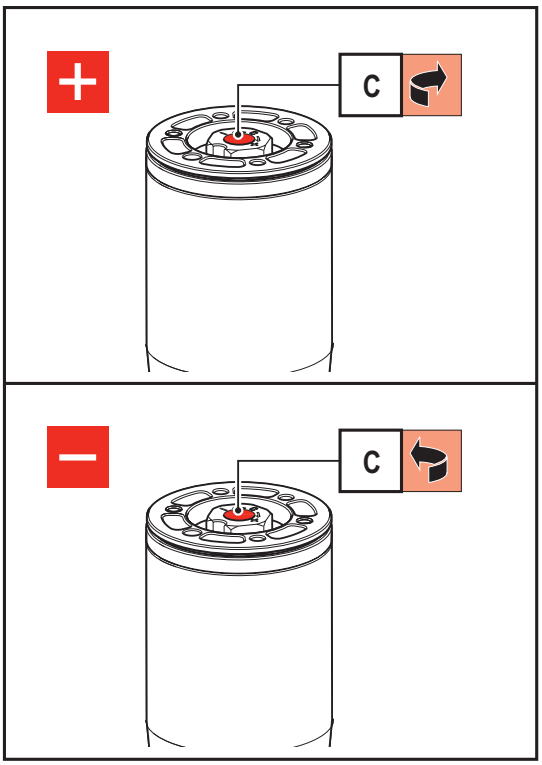

WARNING
If your fork "bottoms" out, immediately adjust thecompression adjustment or check the oil height of thefork. Incorrect compression adjust can result in forkdamage, an accident, personal injury or death.

A "hard" compression setting gives you more stability and lets you ride more aggressively making the mountain bike more reactive, vice versa a "soft" setting means less stability but also a less "nervous" ride.

To modify the compression braking adjustment, always start from the "fully closed" position (the screw is fully turned clockwise). Each screw position can be recognized by a "click".

Carry out regulation by turning the adjuster with a flat-tipped screwdriver.

Turning the adjuster (C) clockwise increases the compression hydraulic damping and proportionally reduces the travel made by the fork.

Turning the adjuster (C) counter-clockwise decreases the compression hydraulic damping making the fork softer when hitting a bump.

WARNING!
Do not force the adjuster past its limits.

STANDARD ADJUSTMENT
Compression: 15 clicks
Extension: 15 clicks

Removing the front fork
Take note of measure "A" which must be restored when reassembling. Set a support under the engine to lift the front wheel from the ground, working as follows:

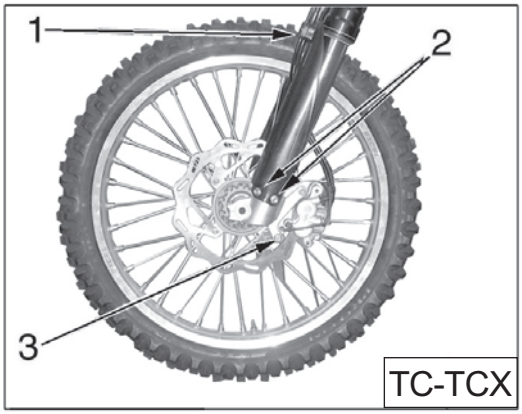

-remove,on the L.H. side, the screws (1) , the brake hose and the instrument cable clamp (TE-SMR) on the fork tube guard;
- remove the six screws (2) and the fork tube guards;
- remove the brake caliper from the L.H. fork tube by unscrewing the two fastening screws (3);
- remove the front wheel following the instructions on page Y.6;

- unloose the screws (4) fastening each fork slider to the steering head and steering base;
- remove the fork legs.

Assemble the front wheel following the instructions on page Y.8 and check the distance “B” between magnet (6) on the brake disc and sensor (7) on the brake caliper.

Restore the starting measure “A”.

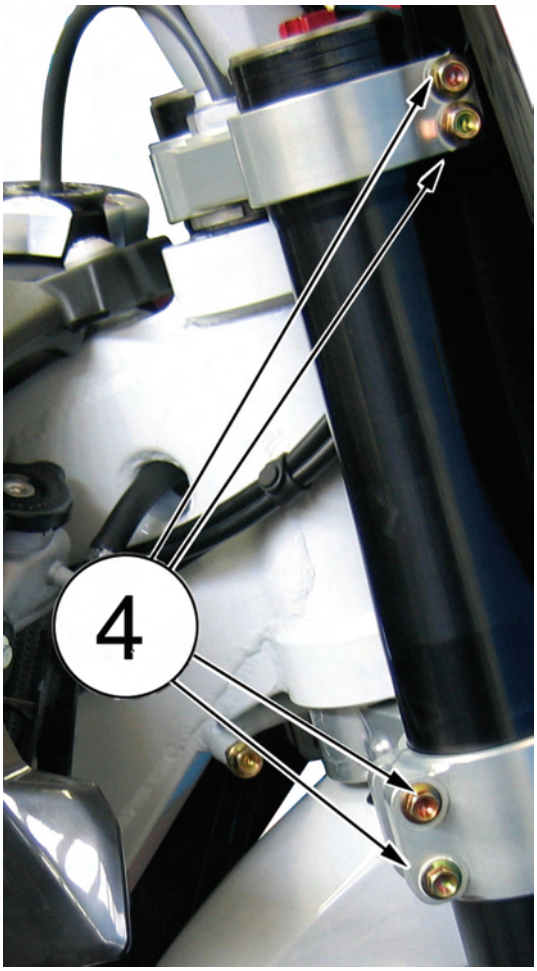

REAR SUSPENSION

Rear suspension J.3
Removal of rear shock absorber J.4
Disassembly, overhauling and reassembly
of the rear shock absorber J.5
Overhaul the spring J.5
Checking the shock absorber J.5
Removing the reservoir plug and the valve J.6
Checks on the piston unit J.8
Replacing the gasket J.8
Checking the adjustment J.9
Reservoir replacement J.10
Disassembling the air/oil diaphragm of the reservoir .. J.11
Reassembling the shock absorber J.11
Shock absorber damping adjustment J.14
Disassembly and overhauling the rear swing arm J.15
Overhauling the rear swing arm axle J.16
Overhauling the rocking lever and
the rear suspension tie rod J.16
Chain tension rollers, chain driving roller,
chain guide, chain runner J.17

Section J

Rear shock absorber

TIGHTENING TORQUES
1, 2: 52.4 Nm/ 5.35 Kgm/ 38.6 ft-lb

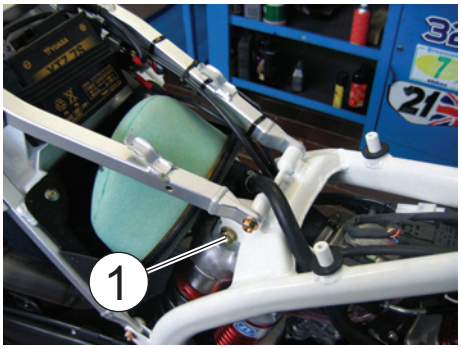

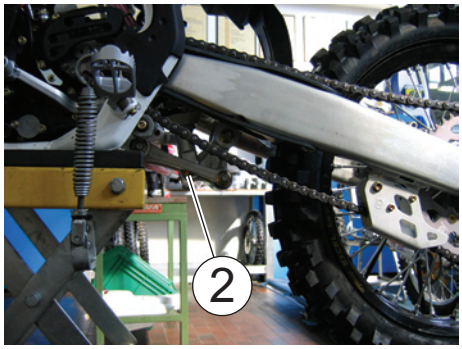

LUBRICATION POINTS (GREASE)

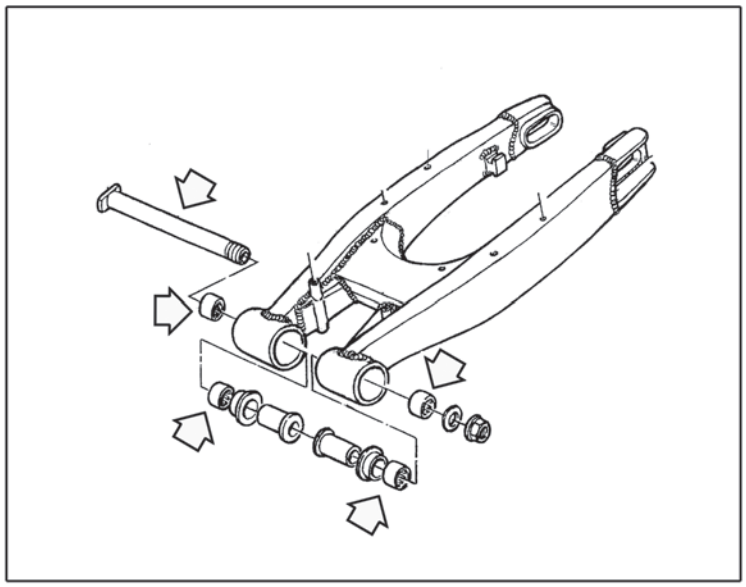

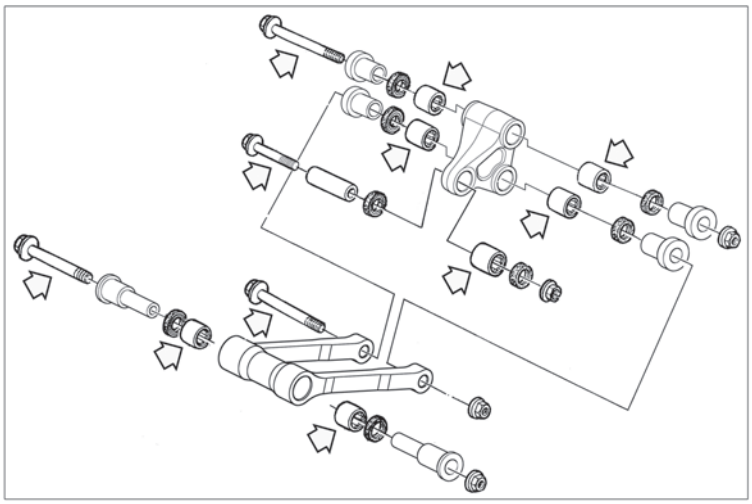

Rear suspension

The suspension of this motorcycle is of the progressive type and consists of a shock absorber, a series of linkages and a swing arm. The pre-load of the shock absorber spring can be adjusted according to the driving and ground conditions. Even the hydraulic damping can be adjusted from outside. Periodically check the wear of the components.

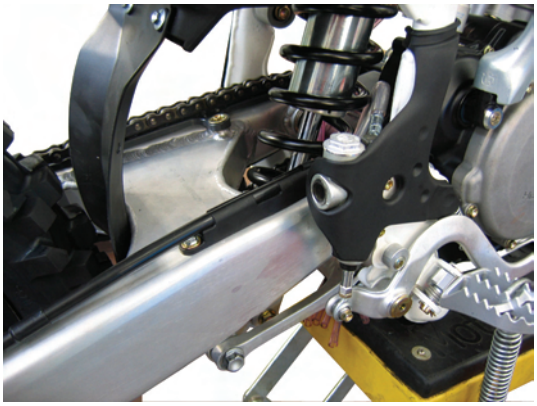

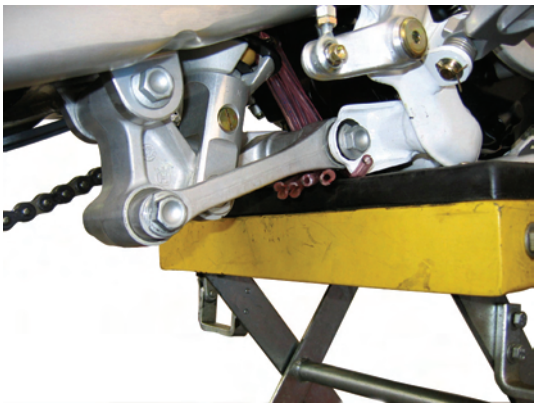

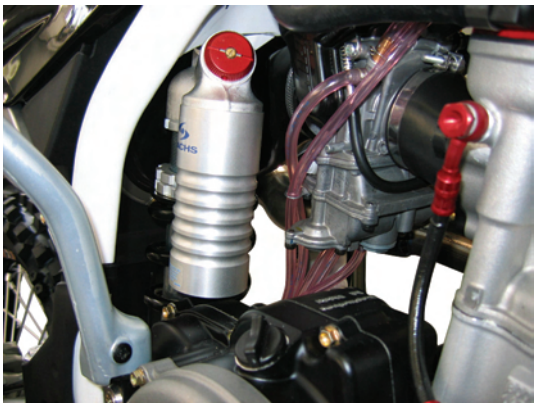

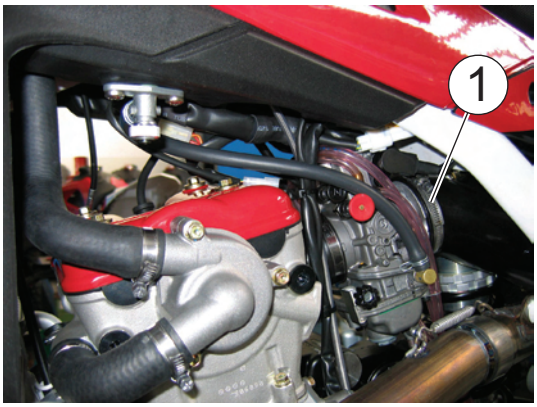

Removing the rear shock absorber
Remove the saddle, the side panels and the silencer as described in chapter "E'"- General operations (pages E.15-E.16-E.17). Loosen the front clamp (1) of the fitting on the carburettor (TC-TXC-SMR 450 R) or on the throttle body (TE-SMR).

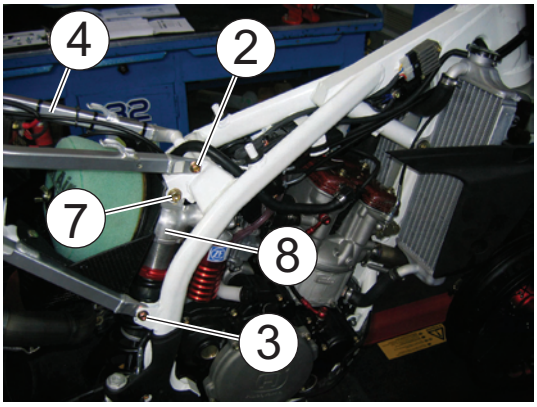

Loosen the upper fastening screw (2) of the rear frame (4), remove the lower fastening screw (3) and turn the rear frame forward making sure not to damage electric cables. Remove the front fixing pin (5) of the suspension tie rod on the frame, the lower fastening screw (6) of the shock absorber, the upper fastening screw (7) and then remove the shock absorber (8).

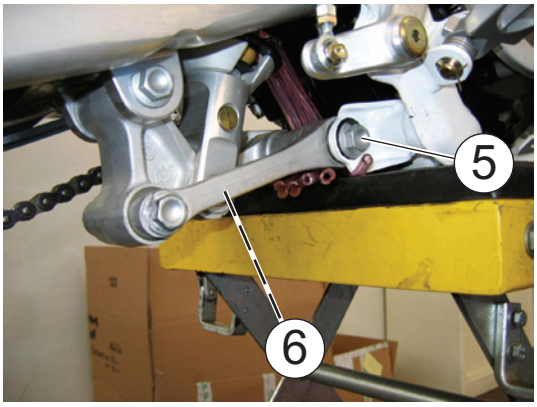

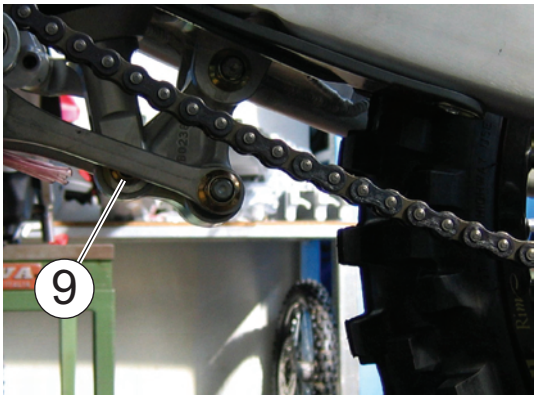

IMPORTANT: when reassembling, place the lower locking nut (9) of the shock absorber on the LEFT SIDE.

Disassembly, overhauling and reassembly of the rear shock absorber

Accurately clean the shock absorber before disassembly.

OVERHAULING THE SPRING

Measure the spring in its housing before disassembling.
Disassembling the spring: when gripping the shock absorber in the vice take care that it gets not warped. Loosen the counter-ring nut, the ring nut, the spring cap, and the spring.

Measure the free lenght of the spring.
USEFUL LIMIT: 9.59-9.70 in. (SMR), 9.98-10.1 in. (TE-TXC 250),
9.98-10.1 in. (TE-TC-TXC 450-510)
When the spring lenght is lower than the useful limit, replace the spring.

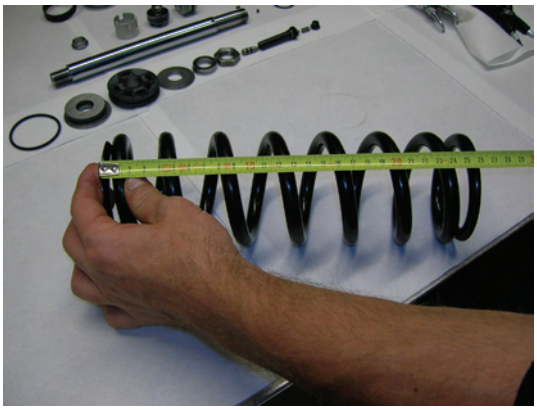

CHECKING THE SHOCK ABSORBER

Visuale check of the shock absorber to detect possible oil leafiks or other drawbacks. Replace the shock absorber if necessary.

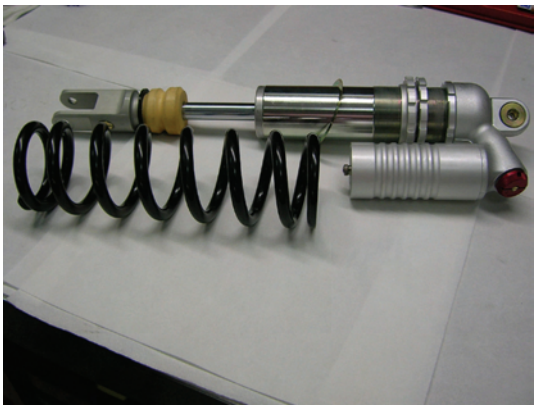

Bleed the gas by pressing on the reservoir valve.

To protect his eyes from possible particles, the operator must turn t h e valve away from his eyes.

Removing the reservoir plug and the valve

Fit a tool on the air chambre cover, then exert a pressure on both the cover and the tool to gain access to the snap ring.

Exercise the greatest care, and exert the pressure by your hands when carrying out this operation.

Use two small screwdrivers to remove the snap ring, and take care not to damage the inner surface.
To remove the snap ring, place first one ring end outside the groove. Remove the other ring end, insert one screwdriver between the snap ring and the reservoir, and lever by the other screwdriver. Remove the whole snap ring, and check that the grooves on the reservoir body have no burrs; on the contrary, rectify the grooves to smooth their surface.
Tighten a tube with internal thread, then remove the plug using pliers.

Lay the shock absorber on the working table. Loosen or dig ot the cover (according to the model).

Once the plug is removed, push and drive the forkrod guide inside the body so as to free snap ring housing. Remove then the snap ring using a screwdriver.

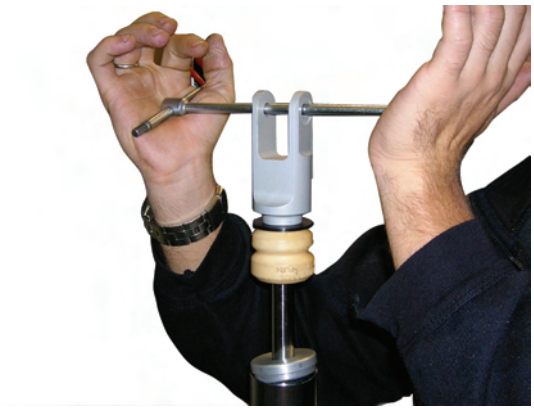

Grip the shock absorber upper side in a vice using aluminium or bronze iaws. Insert a rod or a screwdriver into the connecting hole, and remove tthe piston and forkrod unit from the shock absorber body. Wrap the body in a cloth to prevent spreading the oil on the shock absorber body.

When gripping the shock absorber in the vice keep it in vertical position. When oil is drained from the shock absorber replace the reservoir diaphragm. Pour the oil in a clean and leave it to clear.

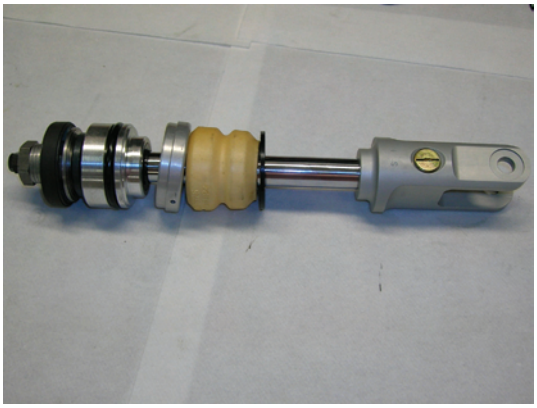

Checks on the piston unit

1) Check whether the piston-right is worn out or damaged; (in this case replace it).
2) Check the OR on the forkrod; replace the OF if scored.
3) Check whether the chromium plated forkrod surface is damaged or scored. In this case replace the replace the damaged forkrod guide, the gasket, and the DU bush. (The forkrod and forkrod guide connection unit is supplied in full).

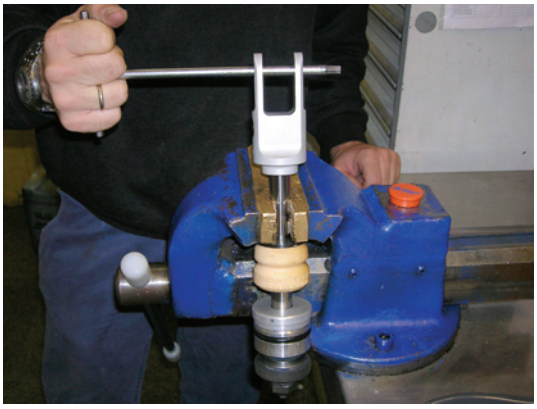

Replacing the gasket

When replacing the seal gasket, loosen the upper connection and remove the forkrod guide. Fit then a new gasket, reassemble the whole series of elements, and tighten the upper connection using Loctite and a 50 Nm (5 kgm; 36.9 ft/lb) torque.

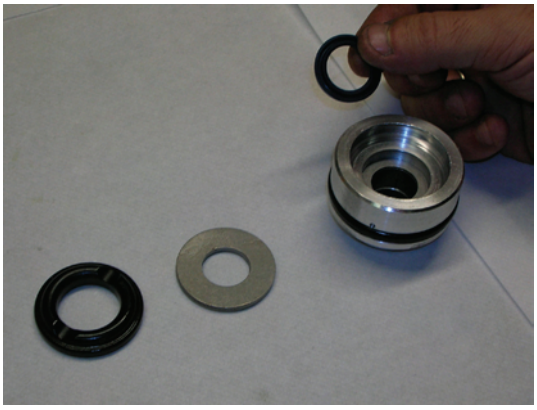

Checking the adjustment

In case of compression adjustment for operating defect, it is necessary to unscrew the knob stopping dowel (before unscrewing, heat with warm air).

Proceed as follows:
unscrew the ring nut with a suitable wrench, extract the parts paying attention to the dismantling sequence in order to correctly effect then the reassembly.

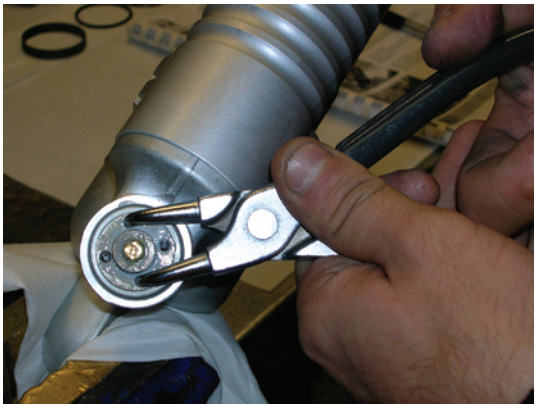

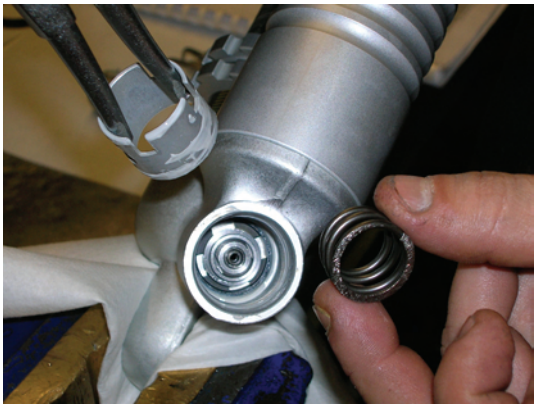

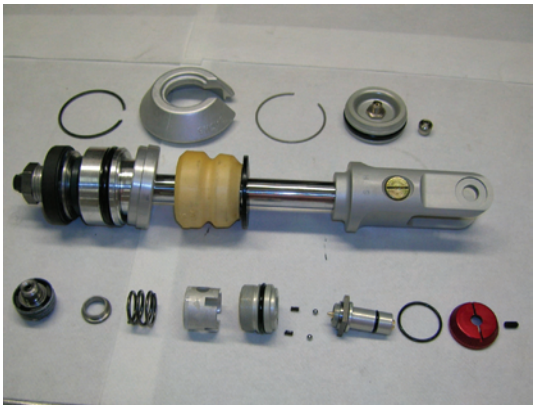

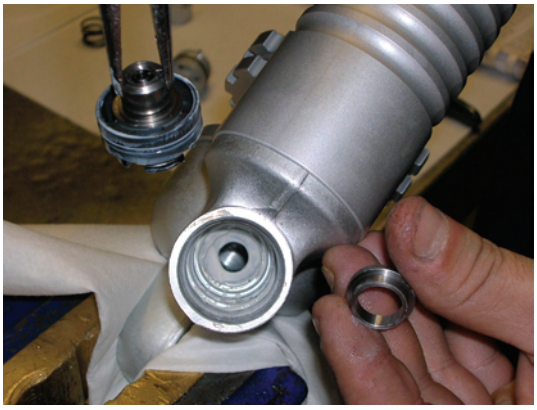

After having completed the check, insert again the piston, the disk, the spring and the ring with slots. Remove the cone holding shaft from the plug, screw the ring and insert it in the slot applying a light pressure. Lock the assembly with the plug at a torque of 30 Nm (3 kgm; 29.2 ft/lbs).

It is strictly forbidden to replace the compression blades with other types of blades, as blades different from the original ones can cause the explosion of the shock absorber during use.

Reservoir replacement
In case of reservoir replacement, it is necessary to heat with warm air near the screwed side and unscrew it with a suitable tool.

Replace the O-Ring of the reservoir. Grease the OR surface, but see that the base thread gets not smeared with grease.

Tighten the reservoir usingf Loctite, and see that the O-Ring is undamaged. Use a 40 Nm (4 kgm; 39.2 ft/lb) torque. **NOTE**: When carriying out these operations see that the place of work and all the elements are well cleaned.

Disassembling the air/oil diaphragm of the reservoir

Always replace the diaphragm when changing the oil inside the shock absorber. Remove the separator using pliers, and check that the tank does not scored. When the inside surface of the tank is scored, replace the tank.

REASSEMBLING THE SHOCK ABSORBER

Accurately clean the shock absorber body using dreasing substances. Dry the body using compressend air.
Hold the shock absorber eye in a vice using aluminium or bronze jaws, or wrapping it in a cloth. Pour inside the shock absorber body 70-80 cm^3 (4.3-4.9 cu. in.) of oil. Insert the forkrod inside the shock absorber body and take care that the sliding track is undamaged. Push the forkrod, the piston and the connection inside, and leave room for topping up.

Prepare the diaphragm with assembled OR (we advise using a new one for each replacement). Fill up the reservoir with oil and insert the diaphragm into the reservoir, (see photo).

Quickly push the diaphragm downwards at the bottom of the reservoir holding fast the forkdìrod in the topping up position. The oil topped up in the reservoir is transferred into the shock absorber body, then sifting through the position blades, it reaches the required level. Avoid possible air intake by quickly carrying out these operations.

Proceed by topping up until reachin approx. 2 cms (0.8 in.) from the body edge. Then, execute 4 or 5 alternating strokes of 5 - 6 cms (2-2.4 in.) to bleed the air left under the piston unit.

These movements should be slow to prevent the reservoir diaphragm from moving through cavitation or compression. Top up with oil the smap ring throat is reached, then slowly fit the forkrod, and the inside end-of-stroke pad, edge-wise with the snap ring throat.

Keep the forkrod in position and run the forkrod guide to fit the shock absorber tube. Drive the forkrod guide inside the body antil the snap ring housing is free. Insert the snap ring and tighten it in position. Pull the rokrod upwards to take the forkrod guide in working position.

Reassemble the reservoir plug and the valve, fit it inside the reservoir, then fit the snap ring into the throat. Insert the nitrogen valve - or the air valve if teh nitrogden valve is not an hand - using 10-12 bar pressure. Reassemble the cap on the valve and check to make sure that both air bleeds, or oil leaks, are not present.

Set the plug on the body

Reassembling the end-of-stroke pad and its washer.
When the end-of-stroke pads needs to be replaced, block the forkrod in a vice using aluminium or bronze jaws, then tighten the connection again using Loctite and a 50 Nm torque. Reassemble the spring and take it to the initial preload using the ring nut and the counter ring nut.

The manufacturer declines any and all responsability for damages deriving from operations uncorrectly carried out.

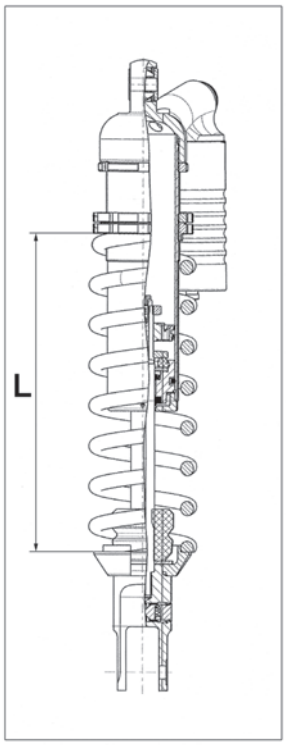

TE, TC, TXC: L= 243,5÷246,5 mm (9.58÷9.70 in.)
SMR: L= 234,5÷237,5 mm (9.23÷9.35 in.)

Shock absorber damping adjustment
Adjustment of the compression stroke is independent from the rebound stroke.

A) COMPRESSION – standard calibration:
1) low damping speed:
□ -15 clicks (± 2 clicks)
(adjuster 1)

2) high damping speed:
□ -15 clicks (± 2 clicks)
(adjuster 3)
To reset the standard calibration, rotate upper adjusters (1) and (3) clockwise to the fully-closed position, then move back for the clicks specified above.
For smoother braking, turn the adjusters anticlockwise; turn them clockwise for harder braking.

B) EXTENSION – standard calibration:
□ -18 clicks (± 2 clicks)
To reset the standard calibration, rotate upper adjuster (2) clockwise to the fully-closed position, then move back for the clicks specified above.
For smoother braking, turn the adjuster anticlockwise; turn it clockwise for harder braking.

Disassembling and overhauling the rear swing arm

Set a stand or a block under the engine and see that the rear wheel is lifted from the ground. Remove the chain (1) of the secondary transmission and disengage the rear brake pipe (2) from the fork (A). Remove the two side guards (3) of the frame. Release the return spring (4) of the rear brake pedal from the frame. Unscrew the nut (5) of the wheel axle (B) and extract it. As there is no need to loosen the chain adjusters (6) on the fork, the chain tension level will stay the same after reassembling. Remove the entire wheel (C) by taking care of the spacers located at the hub sides. Remove the shock absorber (7) as described on page J.3. Remove the nut (8) of the fork pin and then the fork. Make sure the fork pin is parallel (page J.16) and manually check the wear of the roller bearing (D) and of their bushings (E). Turn the bushing inside the roller bearing and replace it if you feel resistance or hear noise.

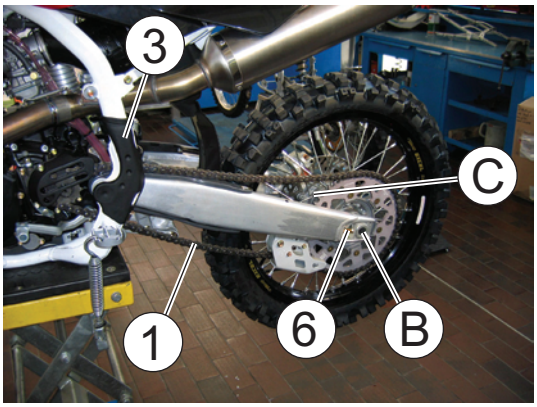

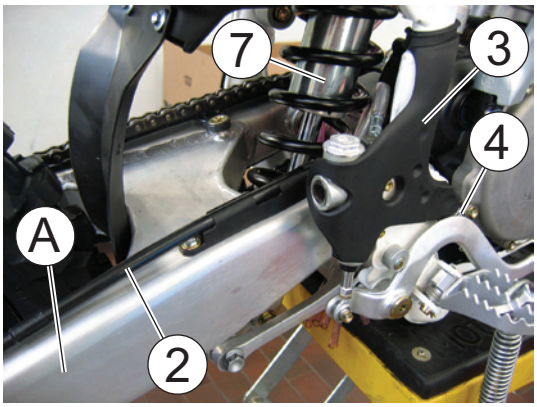

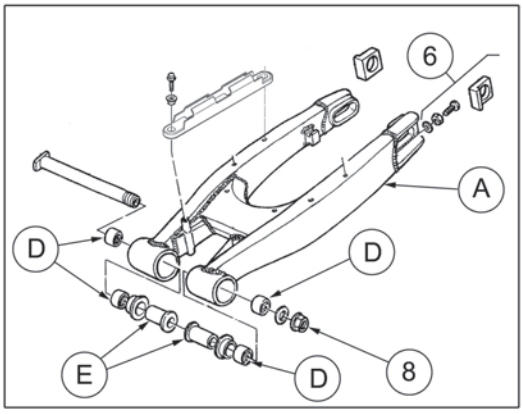

TIGHTENING TORQUES
1: 7,6÷8,4 Nm/ 0,80÷0,85 Kgm/ 5.8÷6.1 ft-lb
7: 80 Nm/ 8,2 Kgm/ 59 ft-lb
8: 122,5 Nm/ 12,5 Kgm/ 90.3 ft-lb (+LOCTITE 243)

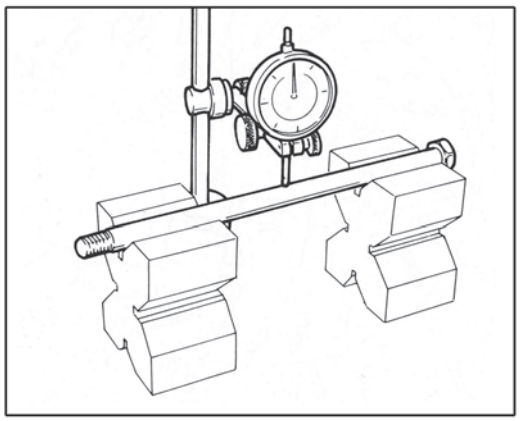

Overhauling the rear swing arm axle
Using a comparator, check the swing arm axle for distortion.
Position the axle on two identical contacts. Rotating the axle and moving it horizontally and take the distortion reading with the instrument.
Distortion limit: 0,30 mm/ 0.012 in.

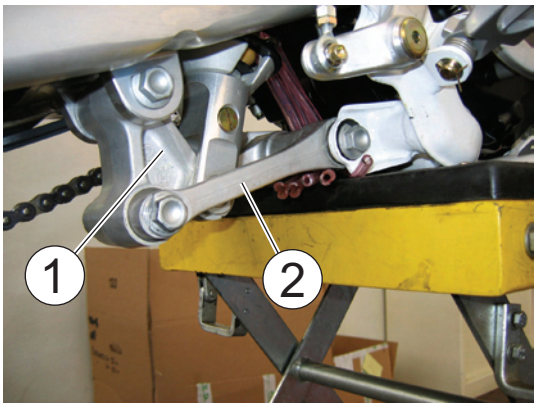

Overhauling the rocking lever and the rear suspension tie rod
With the rocking lever (1) and the tie rod (2) still mounted on the rear swing arm and on the frame respectively, manually check their radial and axial play, pulling these parts in any direction. The rocking lever and tie rod have been designed with a certain amount of axial play in order to allow the shock absorber to always find the ideal operating position. If however there is any axial play, it will be necessary to remove the component from the the swing arm or frame and carry out a check on the internal spacer (A) and (E), bushings (C), (D) and bearings (B).

Apply some grease inside the bearings before assembly.

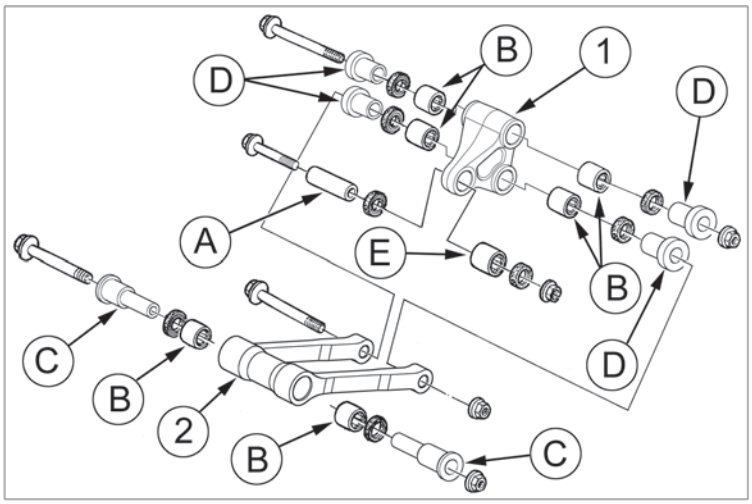

TIGHTENING TORQUES
3: 52,4 Nm/ 5,35 Kgm/ 38.6 ft-lb
4, 5, 6: 80 Nm/ 8,2 Kgm/ 59 ft-lb

Chain tension rollers, chain driving roller, chain guide, chain runner
Check the wear of the above mentioned elements and replace them when necessary.

: Check the chain guide alignement, and remember that a bent element can cause a rapid wear of the chain. In this case, a chain fleeting from the sprocket may ensue.

1- Chain tension roller

2- Chain driving roller

3- Chain guide

4- Chain slider

a- Joint spring

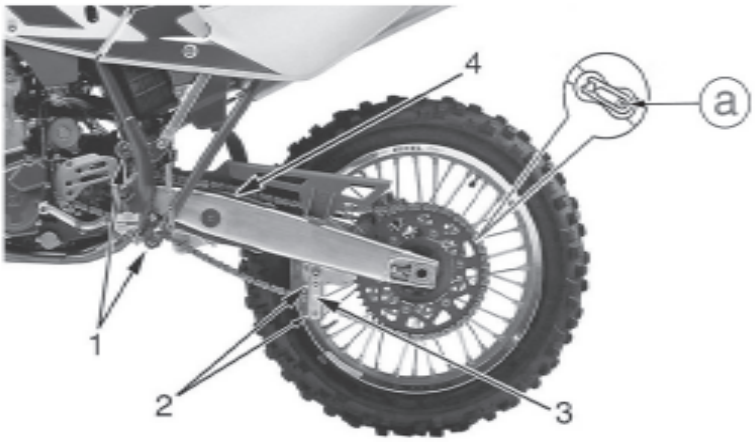

TE-TC-TXC-SMR

Section L

BRAKES

Braking system L.2
Brake disc L.4
Wear check and brake pads replacement L.5
Front braking system bleeding (TE-TC-TXC) L.6
Front braking system bleeding (SMR) L.7
Rear braking system bleeding L.8
Fluid replacement L.9

BRAKING SYSTEM

The braking systems is divided into two completely independent circuits.Each system is provided with a caliper connected to a hydraulic control pump with tank for the fluid.

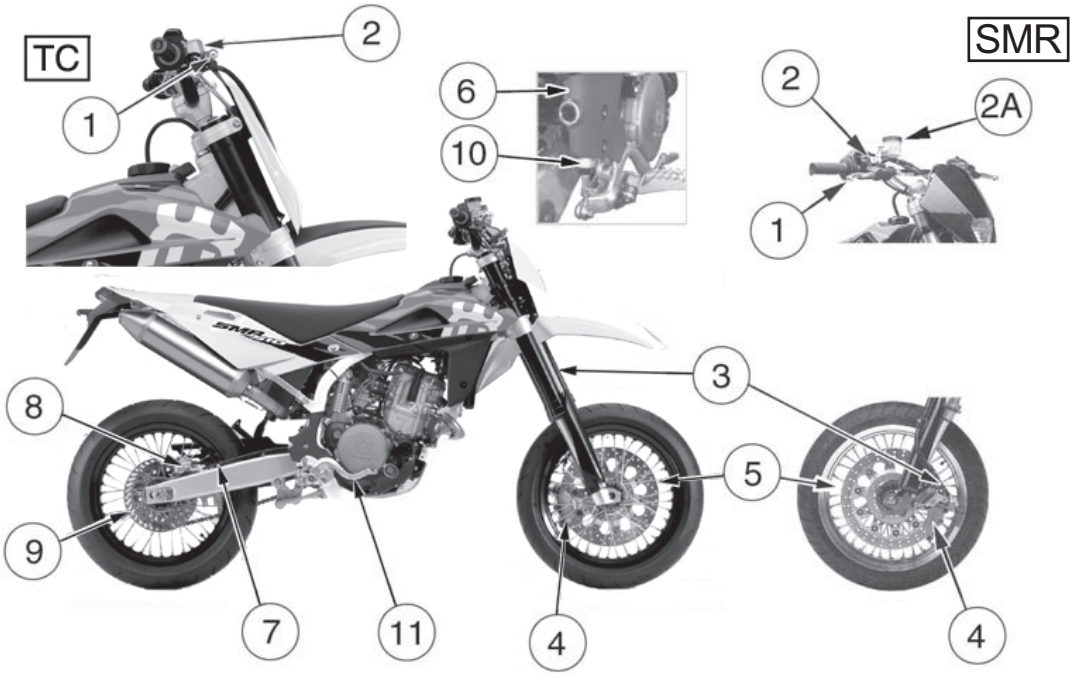

1. Front brake control lever
2. Front brake pump with oil reservoir (TE, TC)
2. Front brake pump (SMR)
2A. Oil reservoir (SMR)
3. Front brake hose
4. Front brake caliper
5. Front brake disc
6. Rear brake oil tank
7. Rear brake hose
8. Rear brake caliper
9. Rear brake disc
10. Rear brake pump
11. Rear brake control pedal

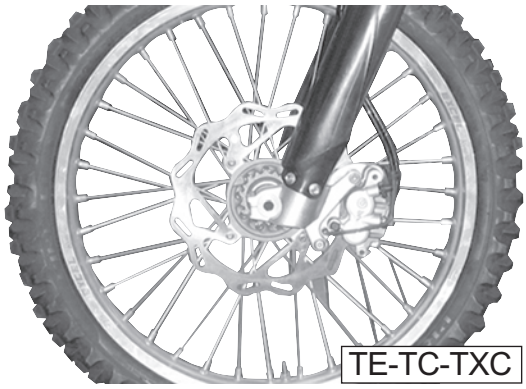

Disc brake

A regular check of brake disc condition is most important; the disc should be absolutely clean without any traces of rust, oil, grease or dirt and should not be excessively scored.

Front brake disc diameter: 10.24 in. (TE, TC, TXC); 12.6 in. (SMR)

Front brake disc thickness (when new): 0.118 in. (TE, TC, TXC); 0.197 in. (SMR)

Brake disc thickness at wear limit: 0.098 in. (TE, TC, TXC); 0.177 in. (SMR)

Rear brake disc diameter: 9.45 in.

Rear brake disc thickness (when new): 0.157 in.

Brake disc thickness at wear limit: 0.138 in.

The disc distortion must not exceed 0.15 mm/0.006 in. (this measure is to be taken with a comparator and with the disc mounted on the rim).

Loosen the four fixing screws to remove the disque from the rim. When reassembling, accurately clean the supporting surfaces and tighten the screws to the torque required.

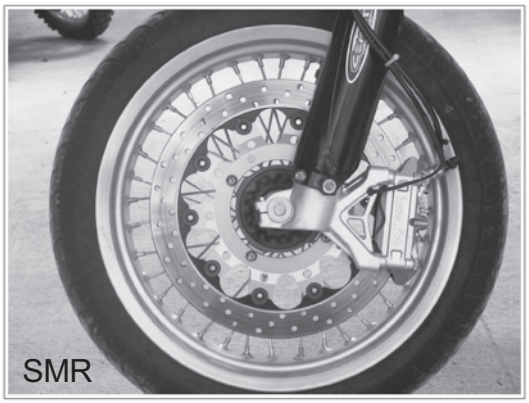

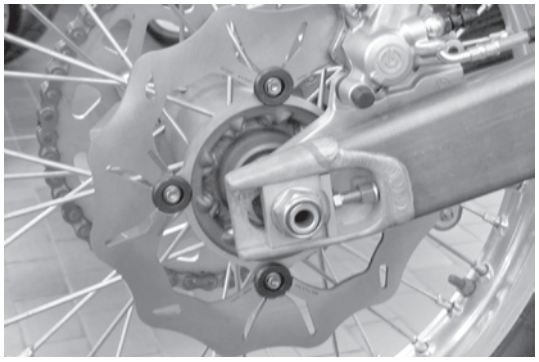

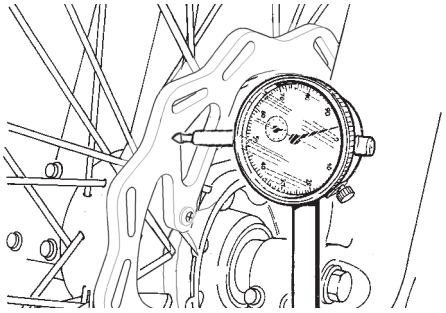

TE-TC-TXC

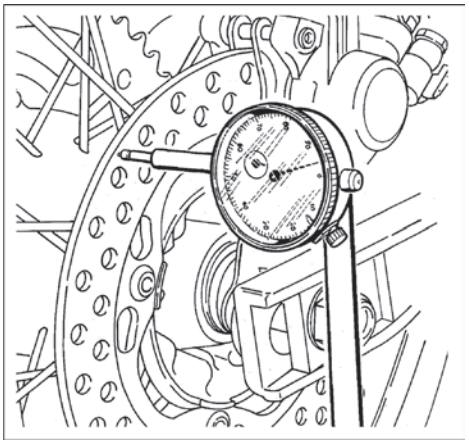

SMR

Wear check and replacement of brake pads
Inspect pads for wear.
Service limit " A"
TE, TC, TXC
- 3,8 mm-0.15 in. (front and rear pads)
If service limit is exceeded, always replace the pads in pairs.
SMR
a) In front: thickness "A" must never be lower than the one pointed out by the wear control notches.
b) At the back: thickness "A" must never be lower than 3,8 mm-0.15 in.
If service limit is exceeded, always replace the pads in pairs.
Be careful that no disc brake fluid or any oil gets on brake pads or discs. Clean off any fluid or oil that inadverently gets on the pads or disc with alcohol.
Replace the pads with new ones if they cannot be cleaned satisfactorily.
PADS REMOVAL
-Remove springs (1).
-Remove pins (2).
-Remove pads.
PADS INSTALLATION
- Install new brake pads.
- Reassemble the two pins (2) and the springs (1).
If the above procedure is followed it will not be necessary to bleed the brake system after new pads have been fitted.
Pumping the brake lever several times is sufficient to return the pistons to their normal position.

During the operation of pads replacement, it is advisable to remove a small quantity of fluid from reservoir, since piston backing inside cylinders could cause overflowing of fluid from reservoir.

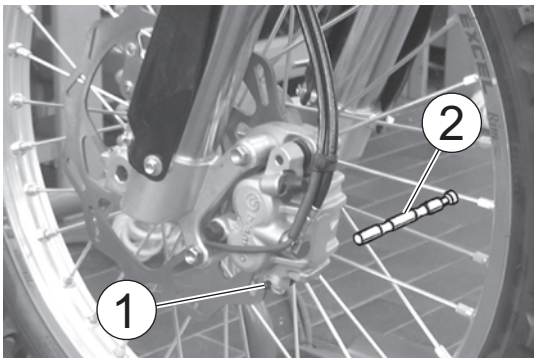

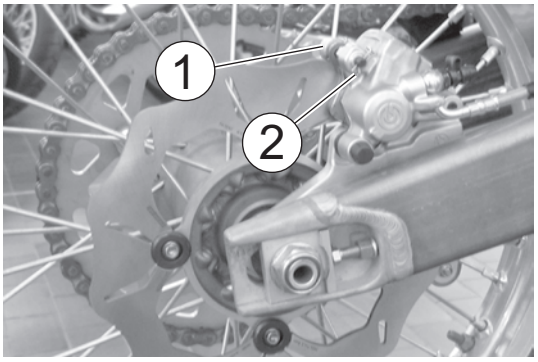

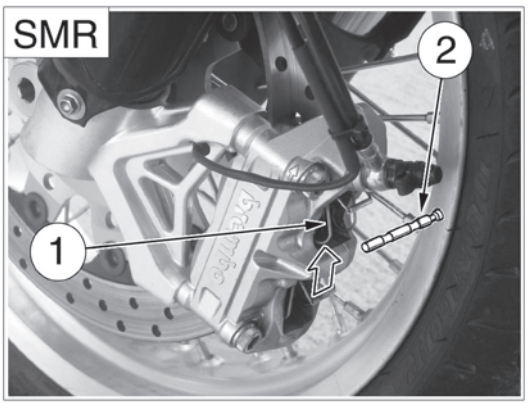

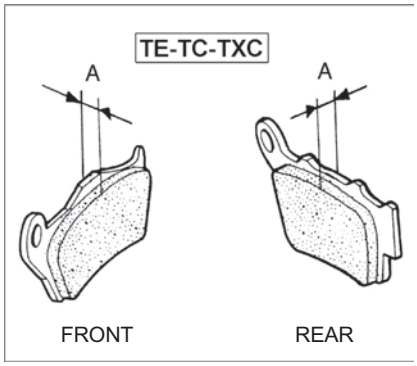

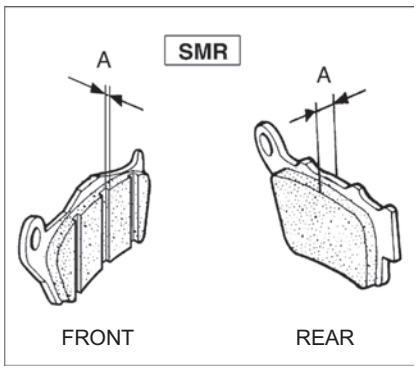

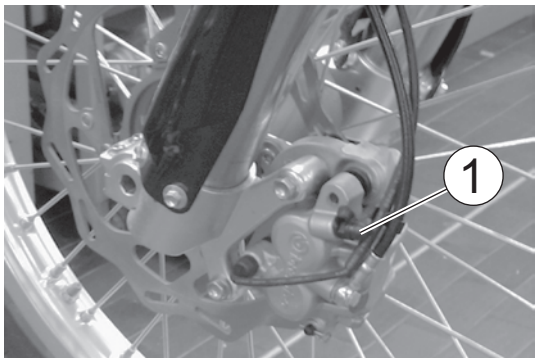

Front braking system bleeding (TE-TC-TXC)
The braking system must be bleed when, due to air in the circuit, the lever stroke is long and spongy.
To bleed the system:
- Remove the rubber cap on the bleeding valve (1).
- Attach a clear plastic hose to the bleeding valve on the brake caliper and turn the other end of the hose into a container (make sure that the end of the hose is submerged in brake fluid during the entire bleeding operation).
- Remove fluid reservoir cap (2), the rubber and fill the reservoir with fresh brake fluid.
- Open the bleeding valve and pump with brake lever (3) several times until the fluid, clear and without bubbles, comes out of the hose: now close the bleeding valve.
- Restore the brake fluid level (A) then reassemble the rubber and the fluid reservoir cap (2).

During the bleed operation the fluid level inside the reservoir must never be lower than the minimum level.

As the braking fluid is a very corrosive substance, in the case it comes in contact with your eyes wash them abundantly with water.

During the bleeding of the braking circuit keep the handlebar turned leftwards. This is the way to lift pump tank and to make easier the bleeding of the braking system.

As the bleeding operation does not fully eliminate the air inside the circuit, the small quantity of air remaining inside will be eliminated after a short time of use of the brake. In this case however, the action of the leverwill be harder and the stroke shorter.

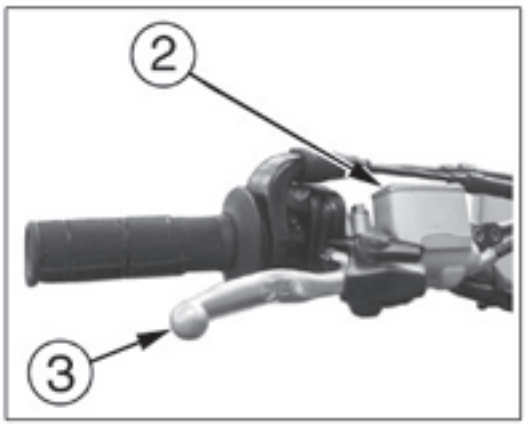

Should the motorcycle, due to a fall during a competition or shop repairs, show some elasticity of the brake lever stroke, with a subsequent braking efficiency decrease, you'll to repeat the circuit bleeding as above described.

Bleeding valve tightening torque: 12÷16 Nm/ 1,2÷1,6 Kgm/ 8.7÷11.6 ft-lb

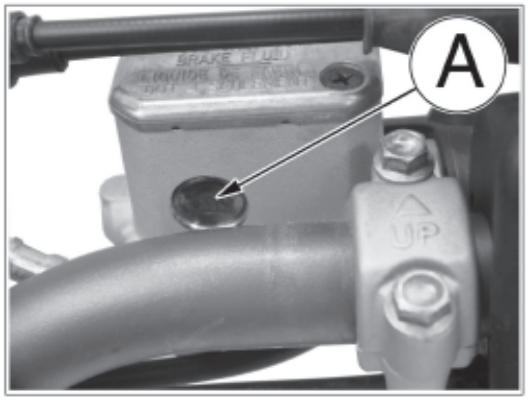

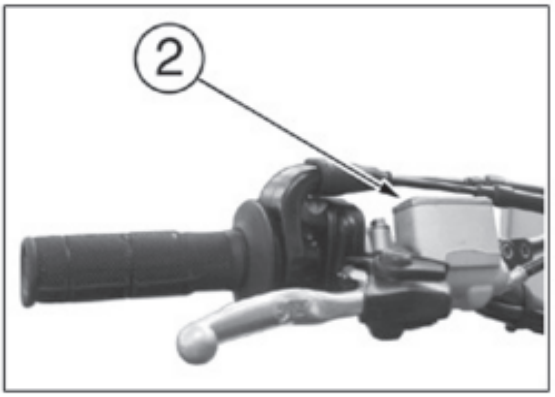

Front braking system bleeding (SMR)
The braking system must be bleed when, due to air in the circuit, the lever stroke is long and spongy.
Regarding the front braking system, first proceed to bleed the upper braking system control (bleeding valve 1), then the brake caliper (bleeding valve 1A).
In both cases, proceed as follows:
- Remove the rubber cap on the bleeding valve (1) or (1A).
- Attach a clear plastic hose to the bleeding valve on the brake caliper and turn the other end of the hose into a container (make sure that the end of the hose is submerged in brake fluid during the entire bleeding operation).
- Remove fluid reservoir cap (2), the rubber and fill the reservoir with fresh brake fluid.
- Open the bleeding valve and pump with brake lever (3) several times until the fluid, clear and without bubbles, comes out of the hose: now close the bleeding valve.
- Restore the brake fluid level (A) then reassemble the rubber and the fluid reservoir cap (2).

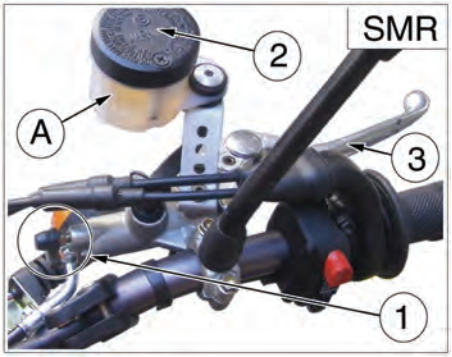

During the bleed operation the fluid level inside the reservoir must never be lower than the minimum level.

As the braking fluid is a very corrosive substance, in the case it comes in contact with your eyes wash them abundantly with water.

During the bleeding of the braking circuit keep the handlebar turned leftwards. This is the way to lift pump tank and to make easier the bleeding of the braking system.

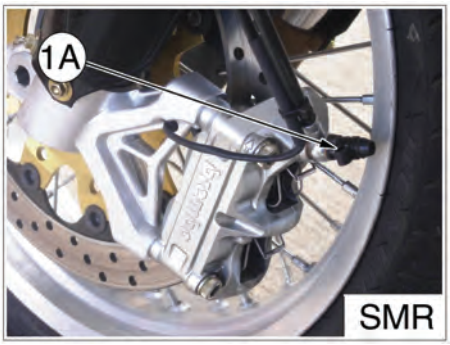

As the bleeding operation does not fully eliminate the air inside the circuit, the small quantity of air remaining inside will be eliminated after a short time of use of the brake. In this case however, the action of the lever will be harder and the stroke shorter.

Should the motorcycle, due to a fall during a competition or shop repairs, show some elasticity of the brake lever stroke, with a subsequent braking efficiency decrease, you'll to repeat the circuit bleeding as above described.

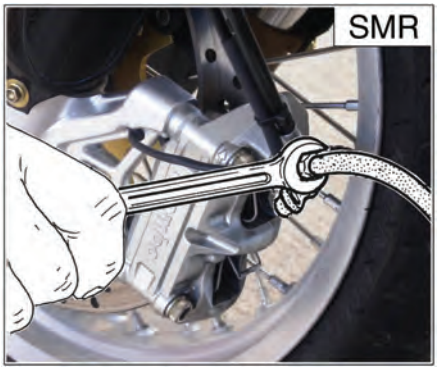

Bleeding valve tightening torque: 12÷16 Nm/ 1,2÷1,6 Kgm/ 8.7÷11.6 ft-lb

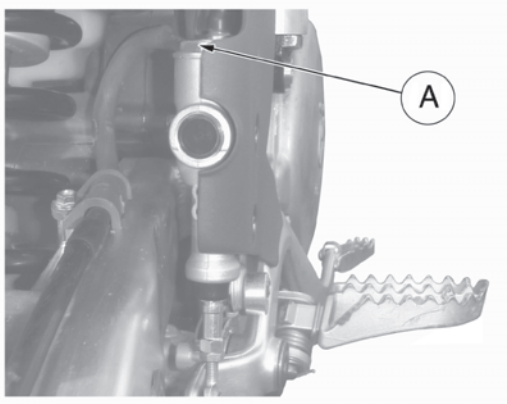

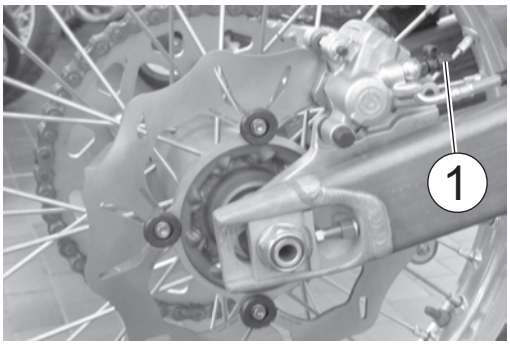

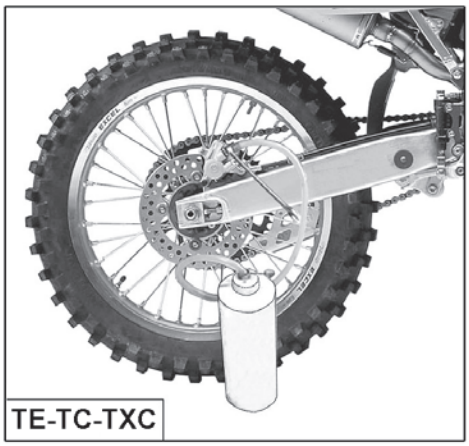

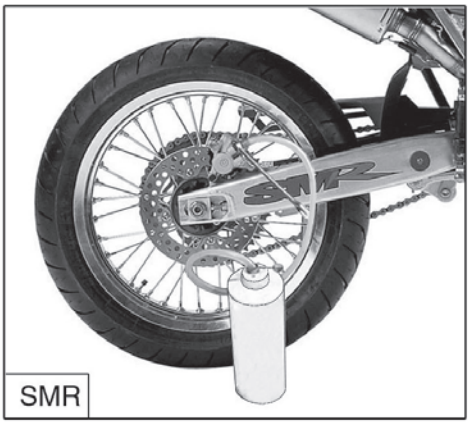

Bleeding the rear breaking system

The braking system must be bled when, due to air in the circuit, the pedal stroke is long and spongy.

To bleed the system:

- Remove the reservoir cover (A) (21 mm wrench) rubber boot and top up with (DOT 4) brake fluid.
- Attach a clear plastic hose to the bleed valve (1) on the caliper and turn the other end of the hose into a container.
- Depress the pedal (2) and keep it full down.
- Loosen the bleed union letting out fluid (at first, only air will come out), then, closing the union slightly.
- Release the pedal and wait for a few seconds before repeating the operation until only fluid come out of the tube.
- Close the bleed union to the prescribed torque and check the fluid level (B) inside the reservoir before reassemblle the cap (1). If the bleeding operation has be done correctly, the pedal will have no mushy feel. If not, repeat the operation.

During the bleed operation the fluid level inside the reservoir must never be lower than the minimum level.

Should the motorcycle, due to a fall during a competition or shop repairs, show some elasticity of the brake lever stroke, with a subsequent braking efficiency decrease, you'll to repeat the circuit bleeding as above described.

Bleeding valve tightening torque: 12÷16 Nm/ 1,2÷1,6 Kgm/ 8.7÷11.6 ft-lb

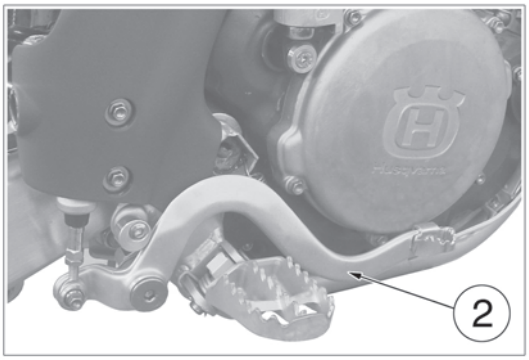

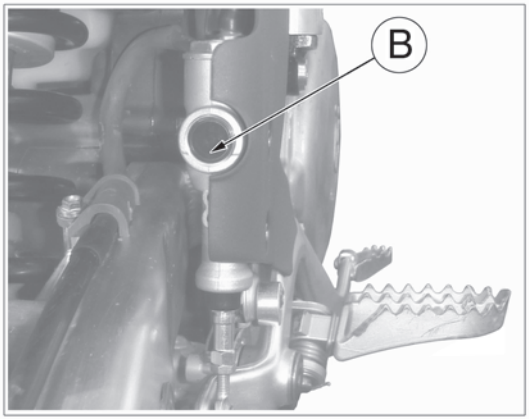

Fluid change
The brake fluid should be checked and changed in accordance with the Periodic Maintenance Chart (page B.9) or whenever it is contaminated with dirt or water. Don't change the fluid in the rain or when a strong wind is blowing.

Use only brake fluid from a sealed container (DOT 4). Never use old brake fluid.

Never allow contaminants (dirt, water, etc.) to enter the brake fluid reservoir.

Don't leave the reservoir cap off any length of time to avoid moisture contamination of the fluid.

Handle brake fluid with care because it can damage paint.

Don't mix two types of fluid for use in the brake. This lowers the brake fluid boiling point and could cause the brake to be ineffective. It may also cause the rubber brake part to deteriorate.

To replace the fluid, proceed as follows:
- Remove the rubber cap on the bleeding valve (1) or (1A).
- Attach a clear plastic hose to the bleeding valve on the brake caliper and turn the other end of the hose into a container.
- Remove fluid reservoir cap (2) or (2A, 21 mm wrench) and the rubber.
- Loosen bleeding valve on the brake caliper.
- Pump with brake lever (3) or brake pedal (3A) in order to push brake fluid out of line.
- Close the bleeding valve and fill the reservoir with fresh brake fluid.
- Open the bleeding valve, apply the brake using the brake lever or pedal, close the bleeding valve with the brake lever or pedal applied and then quickly release the lever or pedal.
- Repeat this operation until the brake line is filled and clear fluid starts coming out of the plastic hose: now close the bleeding valve.
- Restore the brake fluid level (A) or (B) then reassemble the rubber and the fluid reservoir cap.

After the brake fluid replacement, it is necessary to operate the braking system bleeding.

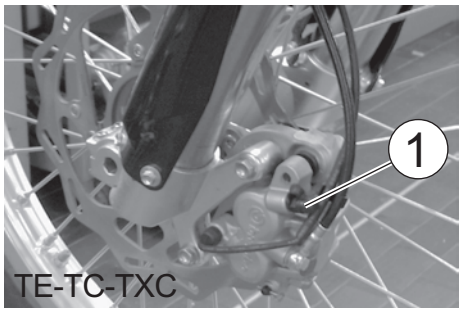

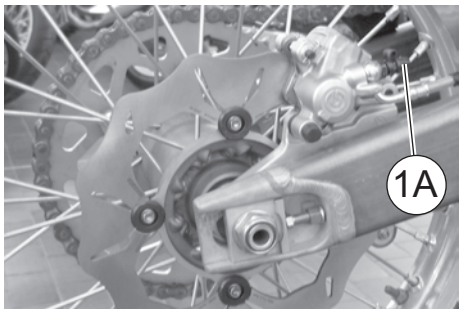

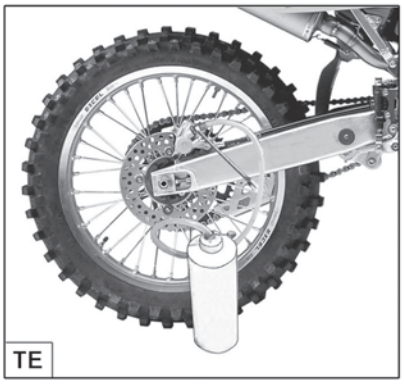

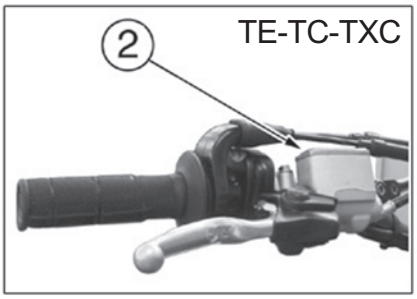

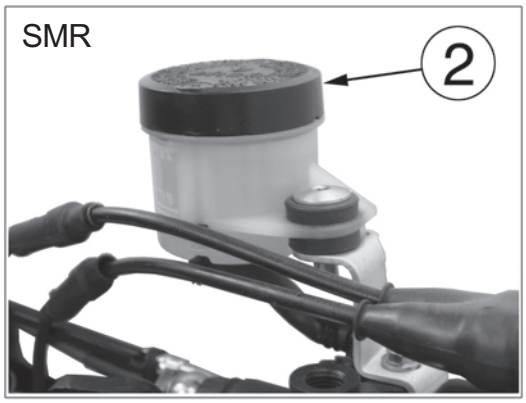
SMR
2

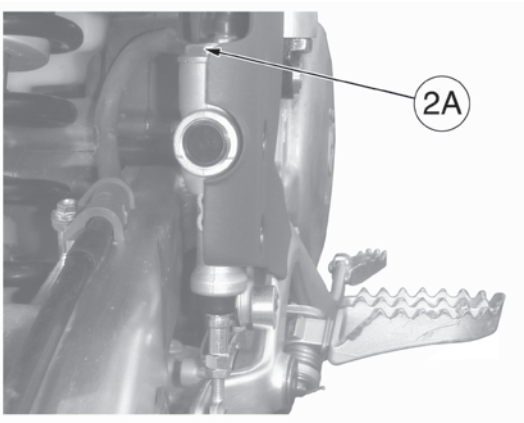
2A

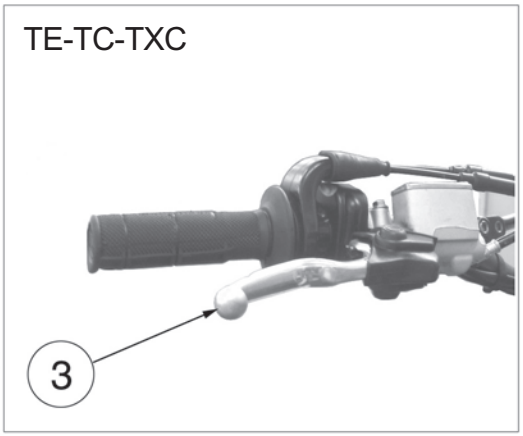
TE-TC-TXC
3

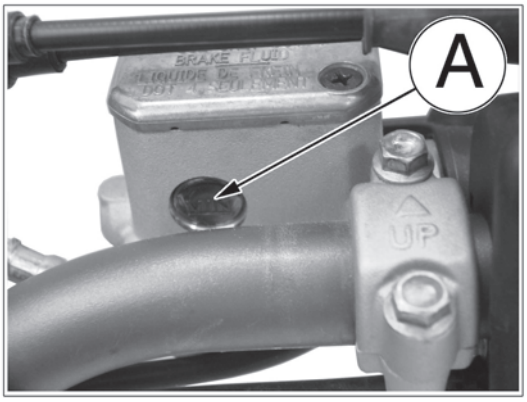
A
UP

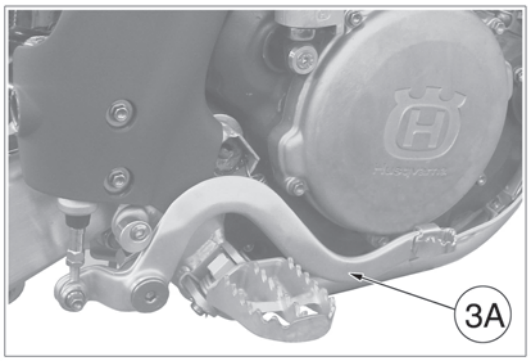
3A

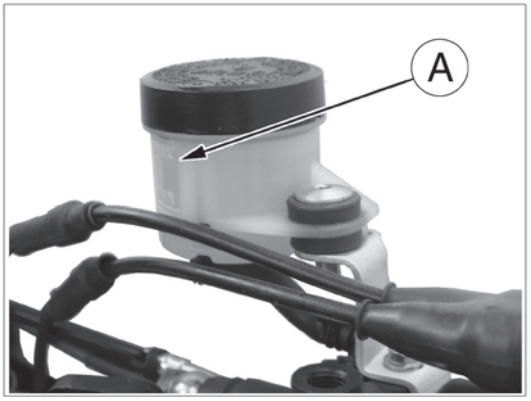

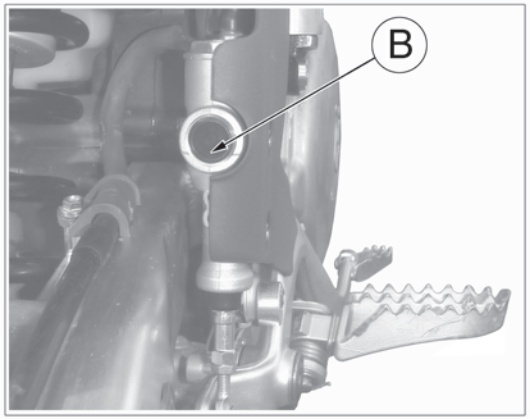

Periodically check the connecting hoses (C) and (D) (see “Periodical maintenance card”, page B.9): if the hoses are worned or cracked, their replacement is advised.

WIRING DIAGRAM (TE, SMR) M.2
KEY TO WIRING DIAGRAM (TE, SMR) M.2
Cable colour coding (TE, SMR) M.3
WIRING DIAGRAM (TXC 250) M.4
KEY TO WIRING DIAGRAM (TXC 250) M.4
Cable colour coding (TXC 250) M.4
WIRING DIAGRAM (TC, TXC 450-510) M.5
KEY TO WIRING DIAGRAM (TC, TXC 450-510) M.5
Cable colour coding (TC, TXC 450-510) M.5
ELECTRICAL COMPONENTS LOCATION (TE-SMR) M.6
ELECTRICAL COMPONENTS LOCATION (TC-TXC) M.8
CHARGING SYSTEM (TE-SMR) M.10
CHARGING SYSTEM (TC-TXC) M.10
CHARGING SYSTEM CHECKS M.12
Battery current leakage M.12
Regulated voltage M.12
Generator stator coil resistance check M.12
Generator no-load performance M.14
Generator test diagram M.14
Rotor cleaning M.14
Voltage regulator-rectifier check (TE-SMR-TXC) M.15
ELECTRIC STARTING SYSTEM (TXC) M.16
ELECTRIC STARTING SYSTEM (TE-SMR) M.16
STARTER SYSTEM CHECKS M.17
Starter motor disassembly M.17
Starter motor check M.17
Starter motor test diagram M.18
Starter motor maintenance M.18
Electric start remote control switch check (TE-SMR-TXC) M.18
ELECTRONIC IGNITION SYSTEM (TC-TXC) M.19
ELECTRONIC IGNITION SYSTEM (TE-SMR) M.20
Electronic coil resistance check M.22
Electronic power unit (ECU) M.23
ELECTRONIC POWER UNIT WIRING DIAGRAM (ECU) (TE-SMR) M.24
Voltage regulator (TE-SMR-TXC) M.25
VOLTAGE REGULATOR-RECTIFIER WIRING DIAGRAM M.25
Spark plug M.26
Gear shift position sensor check (GPS) M.27
Carburetor throttle position sensor check (TPS) (TC-TXC) M.28
BATTERY (TE-SMR) M.29
Battery recharge M.29
HEADLAMP, TAIL LAMP (TE-SMR) M.30
Headlamp adjustment M.30
Headlamp bulb replacement M.30
Rear tail light bulb replacement M.31
Replacing the licence plate light lamp M.32
HANDLEBAR COMMUTATORS M.33
Engine start and stop switches (TC-TXC) M.33
R.H. commutator (TE-SMR) M.33
L.H. commutator (TE-SMR) M.34
NOTES M.35
Connectors M.35
Couplings M.35
Fuses M.36
Semiconductors parts M.36
Battery M.36
DIGITAL INSTRUMENT, WARNING LIGHTS (TE-SMR) M.37
Instrument functions M.37
Instrument setting instructions M.39
Instrument replacement M.40
LOCATING OPERATING TROUBLES M.40
Wire harness TC-TXC M.41
Wire harness TE-SMR M.41
CABLE RUNWAY AND ASSEMBLING INSTRUCTIONS
FOR THE 'TE/SMR' ELECTRIC PARTS M.42
IMPORTANT RECOMMENDATION M.55

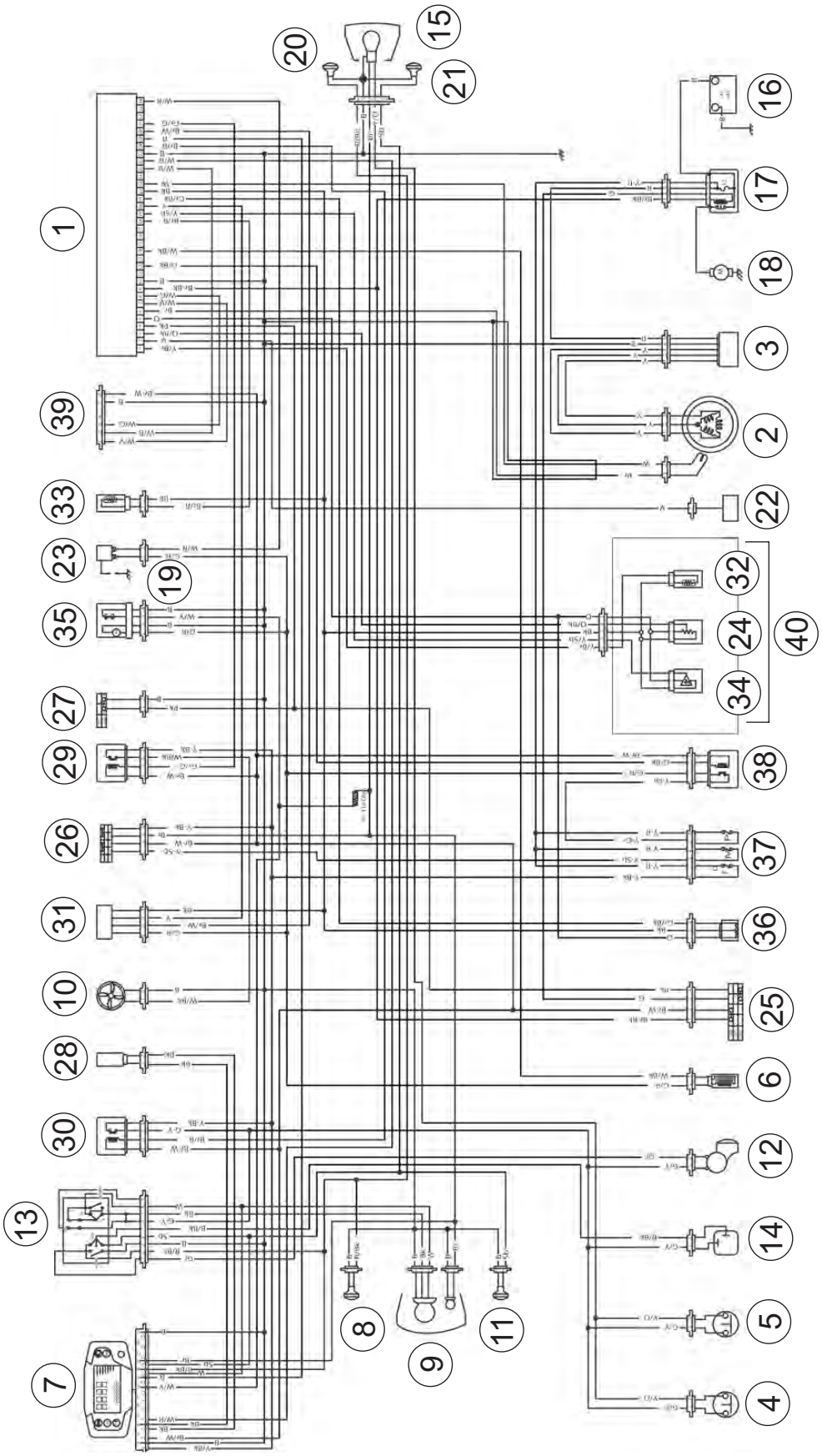

KEY TO ELECTRIC DIAGRAM (TE-SMR)

1. Electronic power unit
2. Alternator
3. Voltage regulator
4. Rear stop switch
5. Front stop switch
6. Injector
7. Instrument
8. R.H. front turn indicator
9. Front headlamp
10. Electric fan
11. L.H. front turn indicator
12. Horn
13. L.H. commutator
14. Turn indicators flasher
15. Tail light
16. Battery
17. Electric start remote control switch
18. Starting motor
19. Spark plug
20. R.H. rear turn indicator
21. L.H. rear turn indicator
22. Gear shift position sensor
23. H.T. Coil
24. Position throttle control sensor (40)
25. R.H. switch
26. Ignition switch
27. Clutch microswitch
28. Speed sensor
29. Relay for electric fan
30. DC relay
31. Lambda probe
32. Air temperature sensor (40)
33. Coolant temperature sensor
34. Pressure sensor (40)
35. Fuel pump
36. Fall sensor* (SMR)
37. Fuses
38. Power relay
39. Power unit interface
40. M.A.Q.S. (34+24+32)

*: it stops the engine in case of a fall

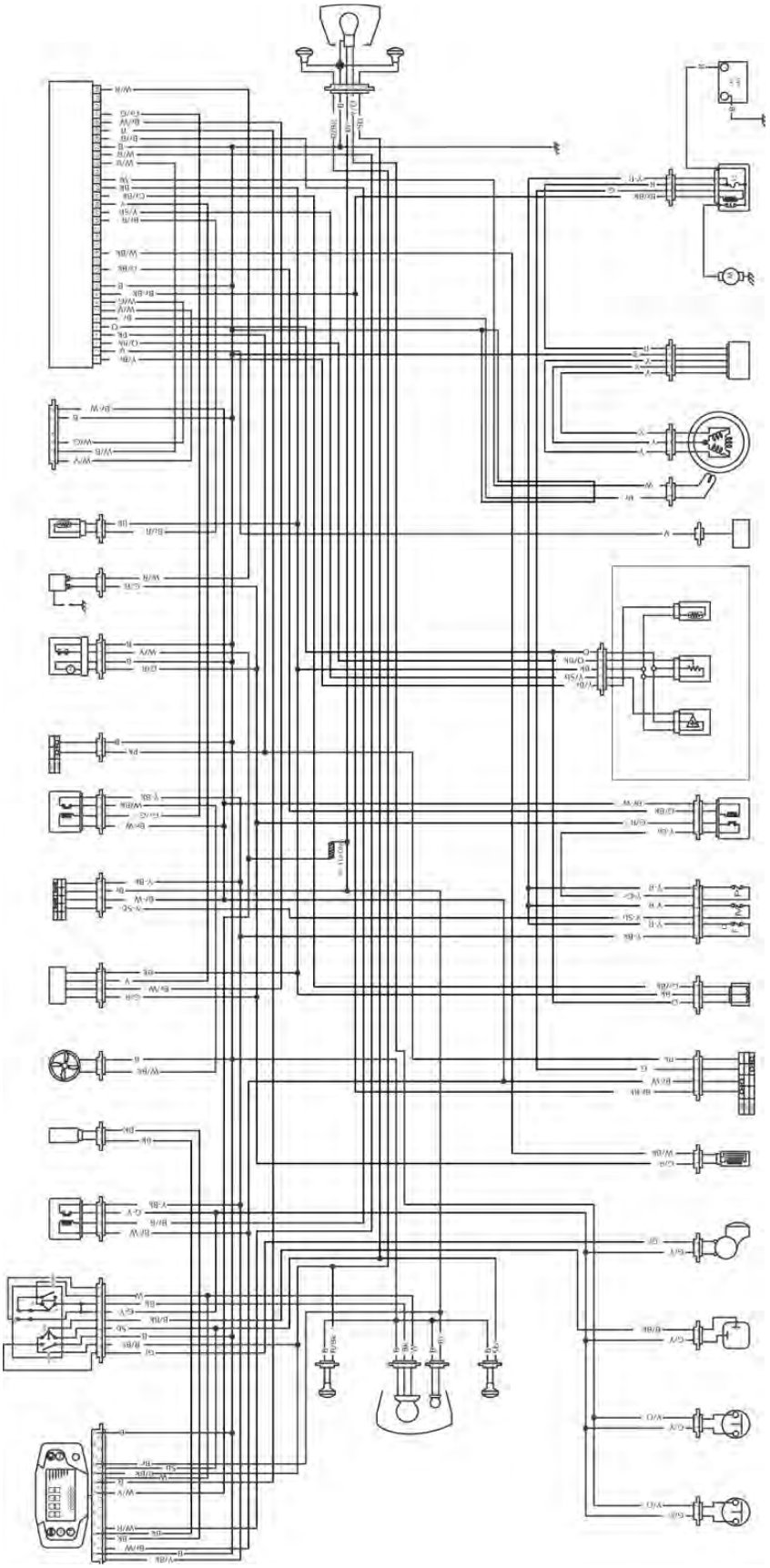

Cable colour coding (TE-SMR)

B	Blue
B/Bk	Blue/Black
Bk	Black
Br	Brown
Br/B	Brown/Blue
Br/Bk	Brown/Black
Br/R	Brown/Red
Br/W	Brown/White
G	Green
G/Bk	Green/Black
G/R	Green/Red
G/Y	Green/Yellow
Gr	Grey
Gr/Bk	Grey/Black
Gr/G	Grey/Green
O	Orange
O/Bk	Orange/Black
Pk	Pink
R	Red
R/Bk	Red/Black
Sb	Sky blue
V	Violet
W	White
W/B	White/Blue
W/Bk	White/Black
W/G	White/Green
W/R	White/Red
W/V	White/Violet
W/Y	White/Yellow
Y	Yellow
Y/Bk	Yellow/Black
Y/Br	Yellow/Brown
Y/Gr	Yellow/Grey
Y/O	Yellow/Orange
Y/Sb	Yellow/Sky blue
Y/R	Yellow/Red

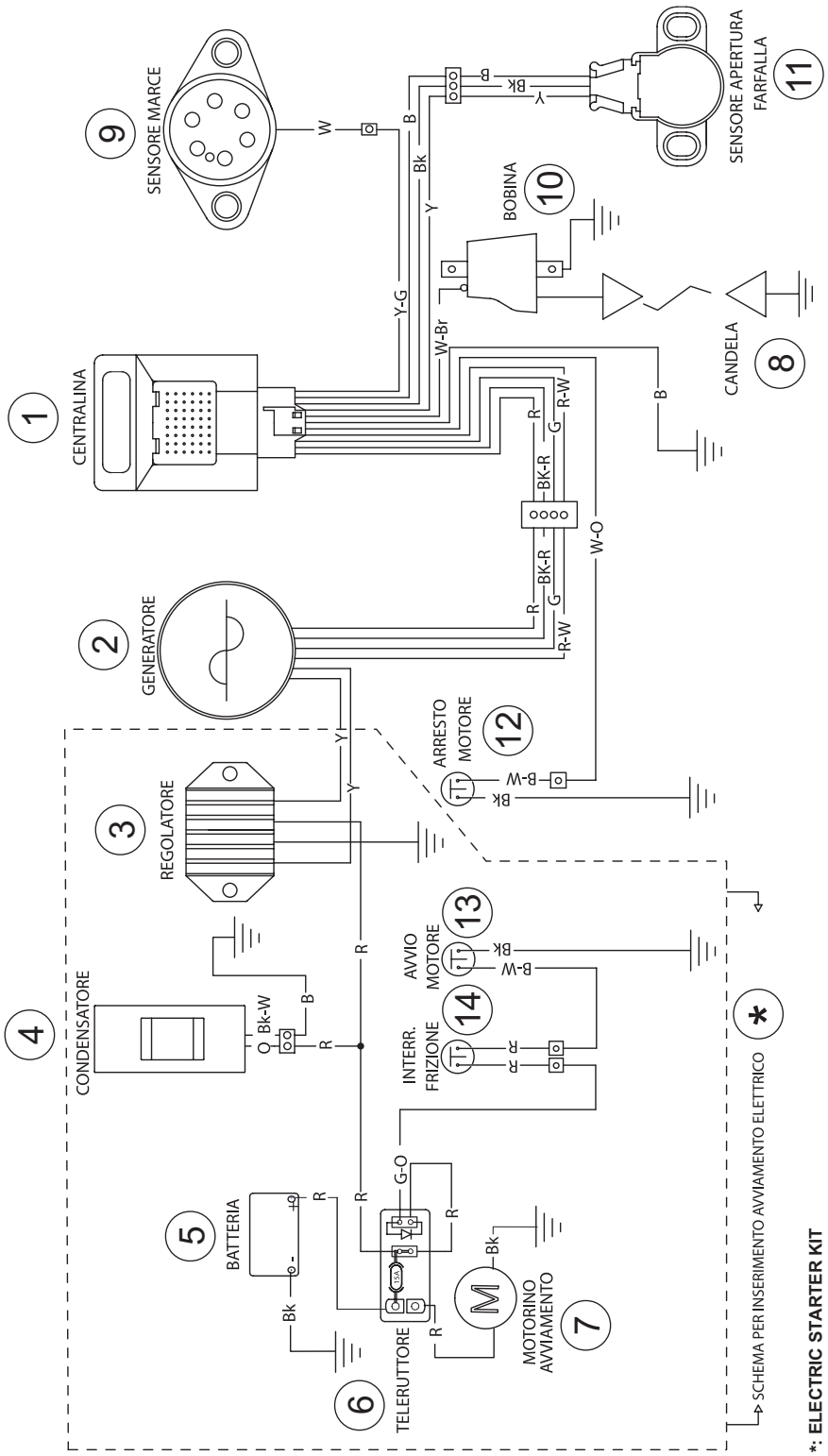

KEY TO ELECTRIC DIAGRAM (TXC 250)

1. Electronic power unit
2. Alternator
3. Voltage regulator
4. Condenser
5. Battery
6. Electric start remote control switch
7. Starting motor
8. Spark plug
9. Gear shift position sensor
10. Electronic coil
11. Carburetor throttle position sensor
12. Engine stop
13. Engine start
14. Clutch microswitch

Cable colour coding	
B	Blue
Br	Brown
Bk	Black
G	Green
Gr	Grey
Gr/R	Grey/Red
O	Orange
P	Pink
R	Red
Sb	Sky blue
V	Violet
W	White
Y	Yellow

KEY TO ELECTRIC DIAGRAM
(TC-TXC 450-510)

1. Electronic power unit
2. Alternator
3. Voltage regulator (TXC)
4. Condenser (TXC)
5. Battery (TXC)
6. Electric start remote control switch (TXC)
7. Starting motor (TXC)
8. Spark plug
9. Gear shift position sensor
10. Electronic coil
11. Carburetor throttle position sensor
12. Engine stop
13. Engine start (TXC)
14. Clutch microswitch (TXC)

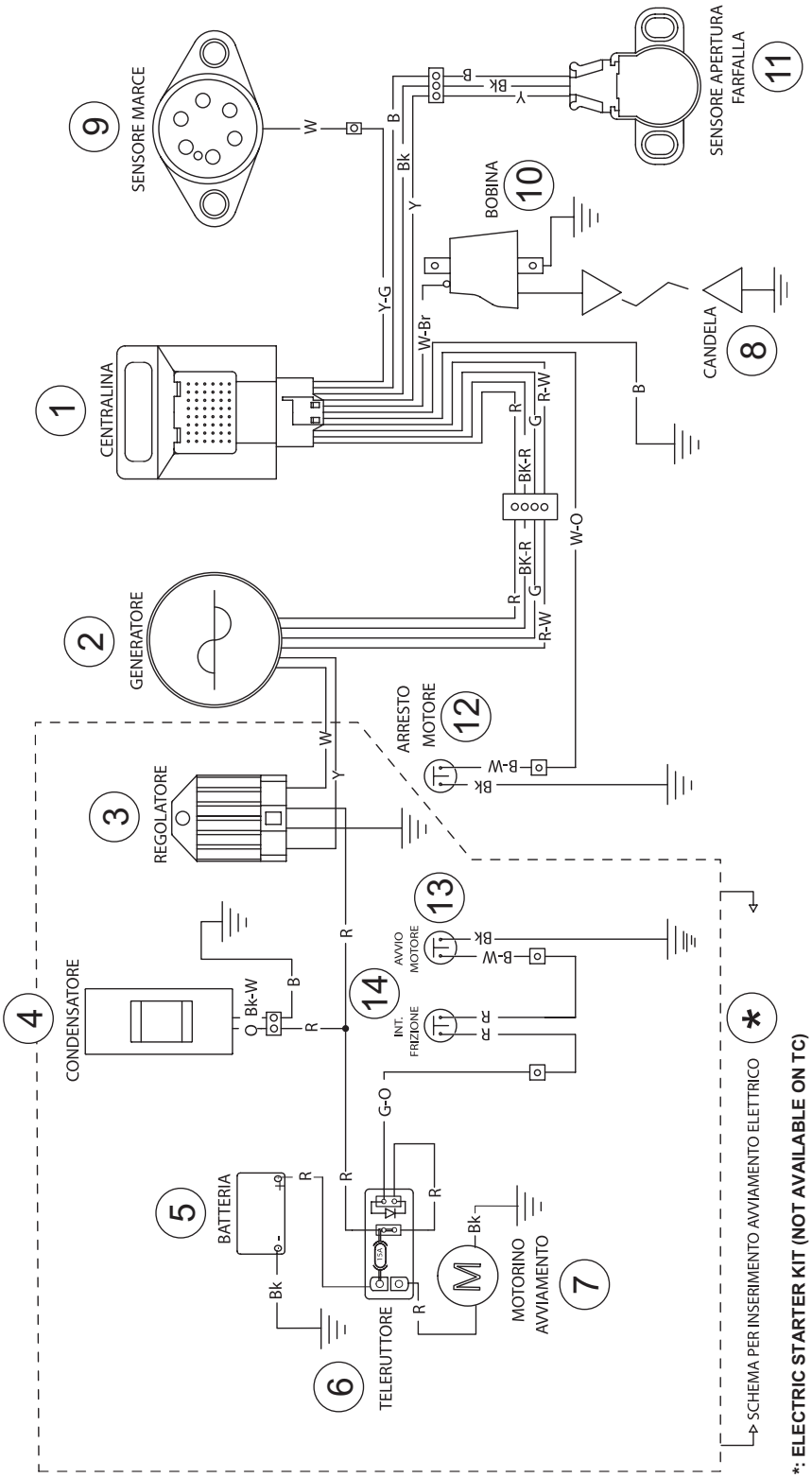

*: ELECTRIC STARTER KIT (NOT AVAILABLE ON TC)

Cable colour coding	
B	Blue
Br	Brown
Bk	Black
G	Green
Gr	Grey
Gr/R	Grey/Red
O	Orange
P	Pink
R	Red
Sb	Sky blue
V	Violet
W	White
Y	Yellow

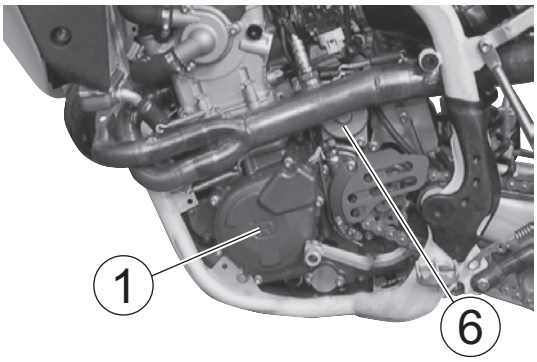

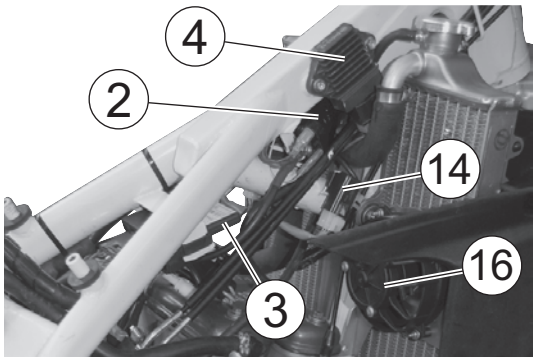

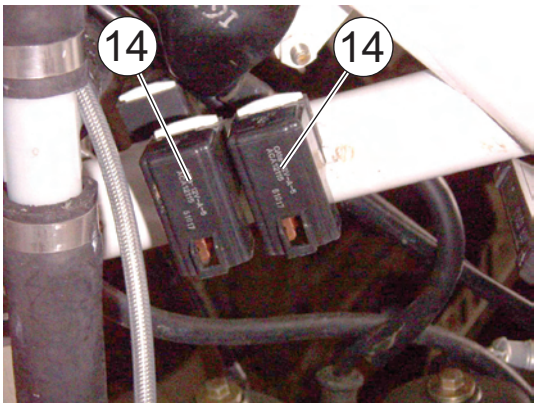

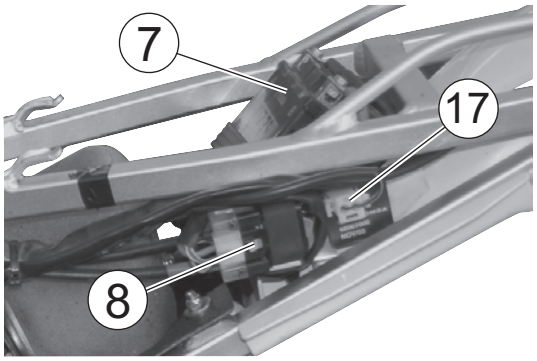

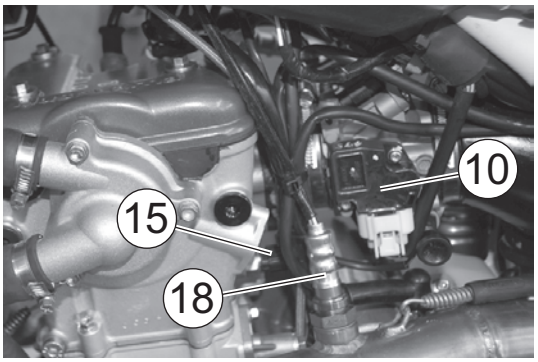

ELECTRICAL COMPONENTS LOCATION (TE-SMR)

The ignition system includes the following elements:
- Generator (1), in oil bath, on the inner side of L.H. crankcase cover;
- Electronic ignition coil (2) under the fuel tank;
- Electronic power unit C.D.I. (3) under the fuel tank;
- Voltage regulator (4) under the fuel tank;
- Spark plug (5) on the R.H. side of cylinder head;
- Starting motor 12V-450W (6) behind the cylinder;
- Electric start remote control switch (8) on the left side of the rear frame.
- M.A.Q.S. sensor (pressure, throttle control position, air temperature) (10) on the throttle body.

The electric system includes the following elements:
- Battery 12V-6Ah (7) or, in alternative, 12V-7Ah under the saddle;
- Flashing indicator device (17) on the left side of the rear frame;
- Relay (14) for light and injection system, on the L.H. side of the frame;
- Relay (14) for the electric fan, on the R.H. side of the frame;
- Electric fan (16);
- Two fuses (9) 15A and one (13) 20A, on the right side of the rear mudguard;
- Fall sensor (11) (SMR) on the right side of the rear frame;
- Coolant temperature sensor (15);
- Lambda probe (18);
- Headlamp (20) with two filaments bulb of 12V-35/35W and parking light bulb of 12V-3W;
- Rear tail-light (21) with stop bulbs of 12V-21W and parking light bulb of 12V 5W;
- Turn signals bulb (22) of 12V-10W;
- Fuel pump (19) inside the fuel tank.

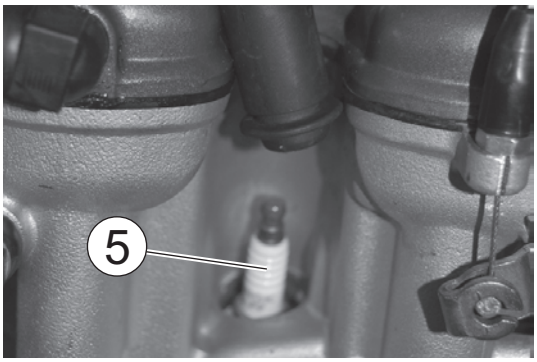
5

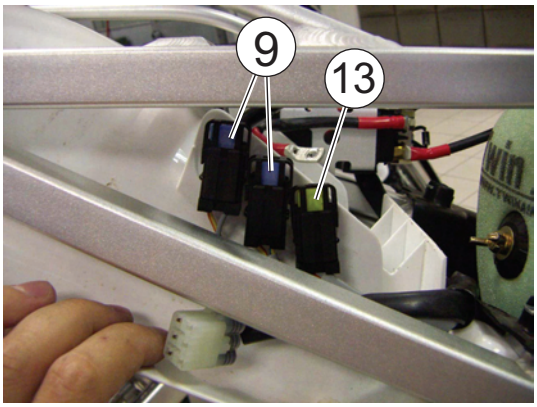
9
13

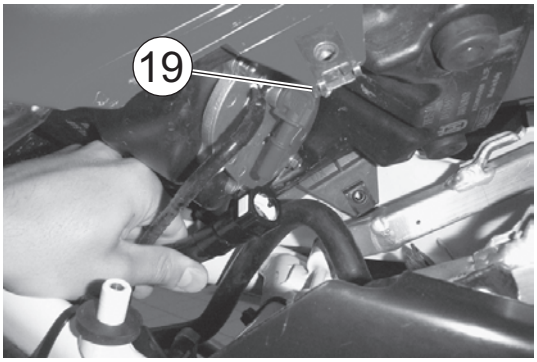
19

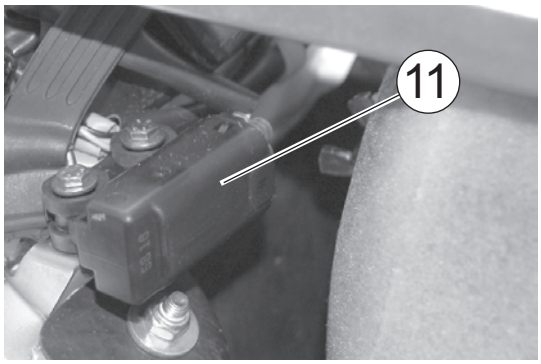
11

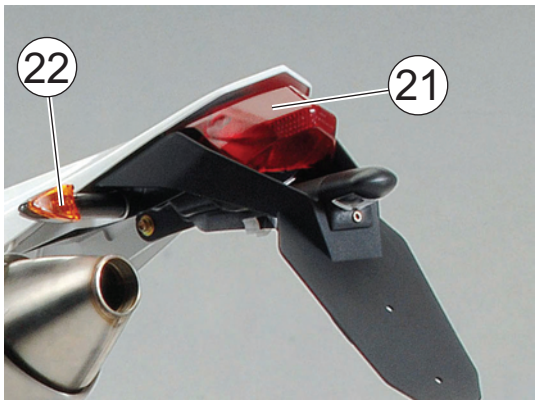
22
21

20
Husqvarna

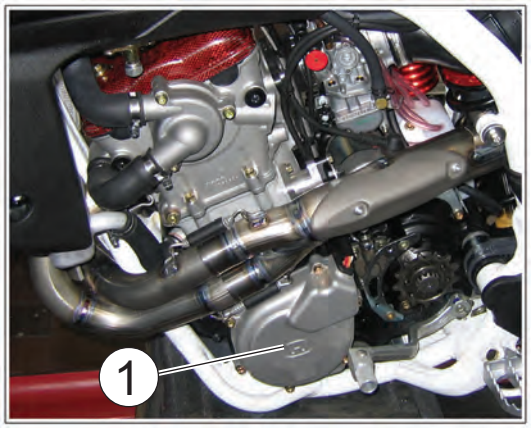

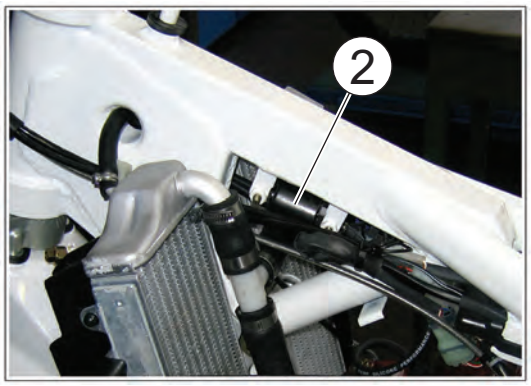

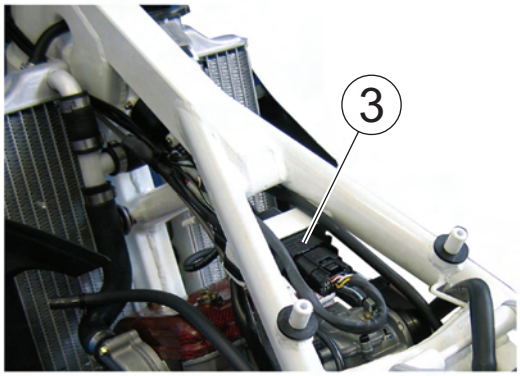

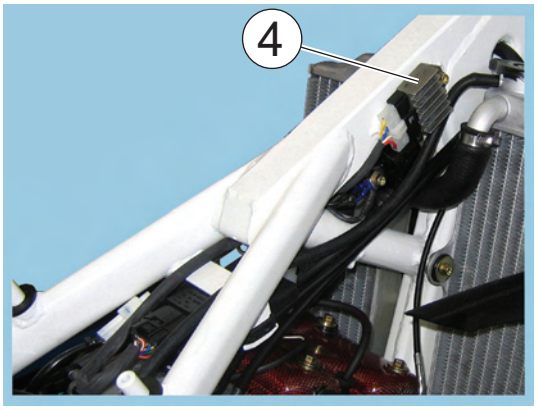

ELECTRICAL COMPONENTS LOCATION (TC-TXC)

The ignition system includes the following elements:
- Generator (1) on the inner side of L.H. crankcase cover;
- Electronic coil (2) and condenser (11; TXC) under the fuel tank;
- Electronic power unit C.D.I. (3) under the fuel tank;
- Voltage regulator (4; TXC) under the fuel tank;
- Spark plug (5) on the R.H. side of cylinder head;
- Starting motor 12V-450W (6; TXC) behind the cylinder (TE-TXC-SMR);
- Electric start remote control switch (7; TXC) on the left side of the rear frame;
- Potentiometer (10) on the carburettor.

The electric system includes the following elements (TXC):
- Battery 12V-6Ah (7) under the saddle;
- Two fuses (9) 20A, on the electric starter contactor (7).

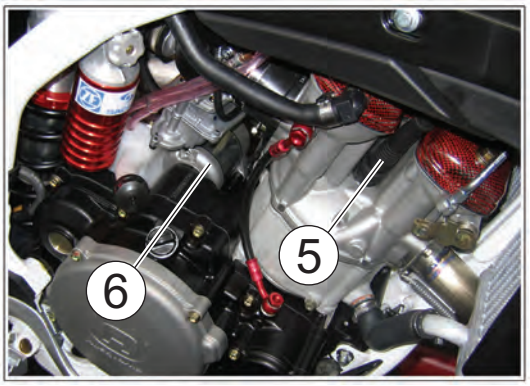
6
5

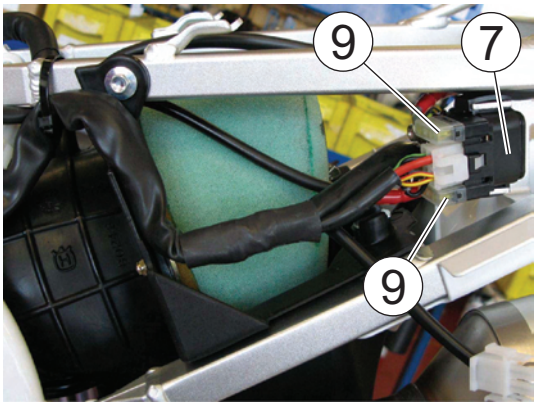
9
7
9

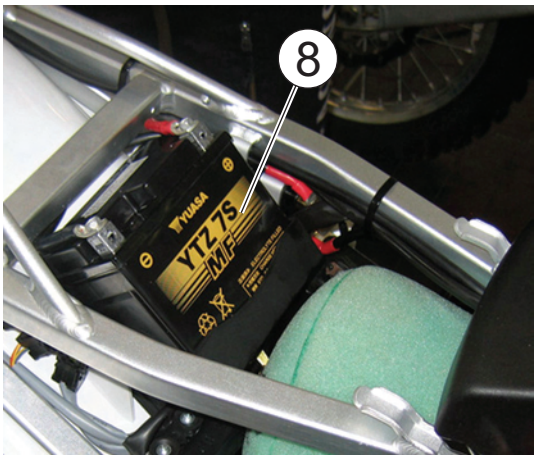
8
YUASA
YTZ 7S
MF

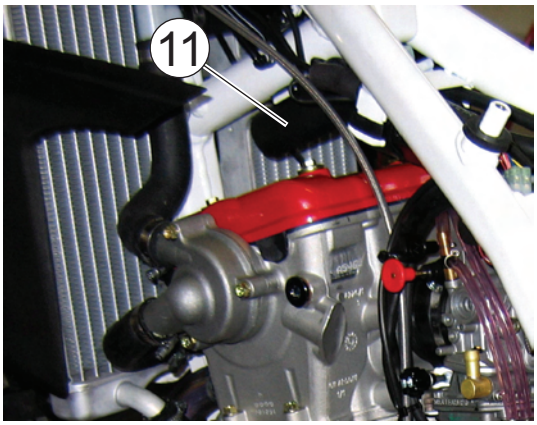
11

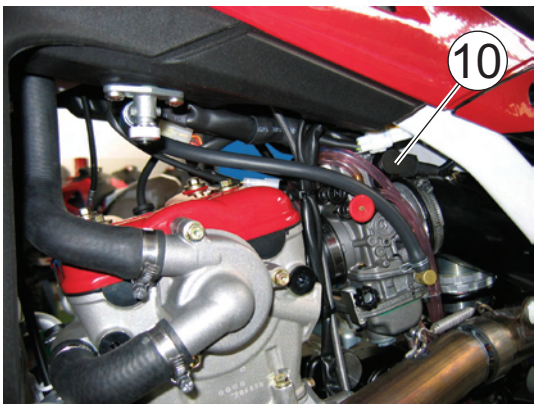
10

CHARGING SYSTEM (TE-SMR)
The charging system consists of:
- Alternator (2);
- Voltage regulator-rectifier (3);
- Battery (5).

The AC current produced by the alternator is converted by the regulator-rectifier into DC current.
The regulator-rectifier prevents overcharging of the battery and changes the AC current to the DC current.
All these components maintain a constant voltage and prevent the battery from overcharging.

CHARGING SYSTEM WIRING DIAGRAM

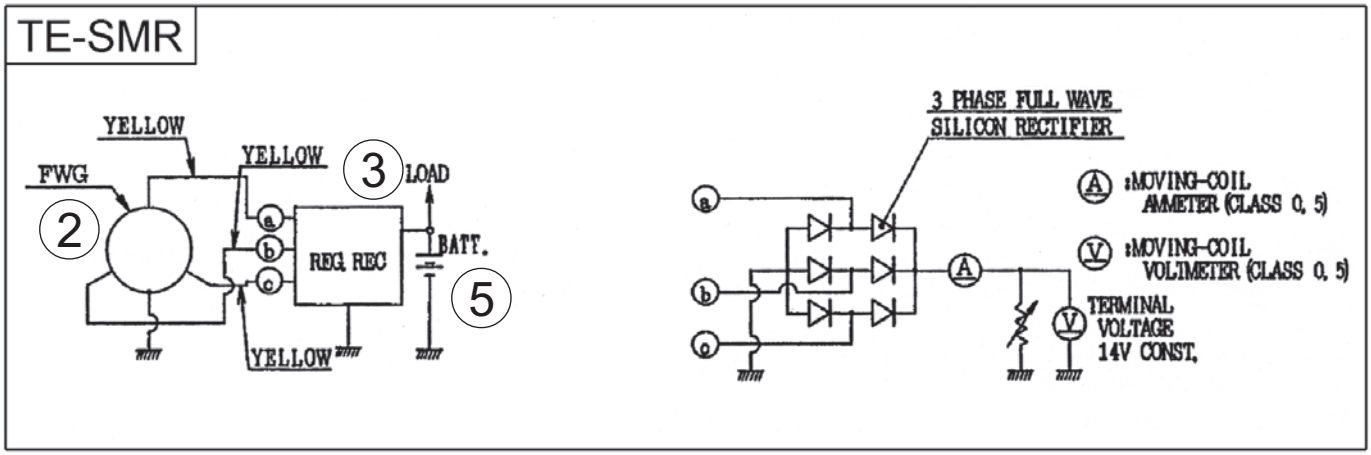

CHARGING SYSTEM (TXC)
The charging system consists of:
- Alternator (2);
- Voltage regulator-rectifier (3);
- Condenser (4);
- Battery (5).

The AC current produced by the alternator is converted by the regulator-rectifier into DC current.
The regulator-rectifier prevents overcharging of the battery and changes the AC current to the DC current.
All these components maintain a constant voltage and prevent the battery from overcharging.

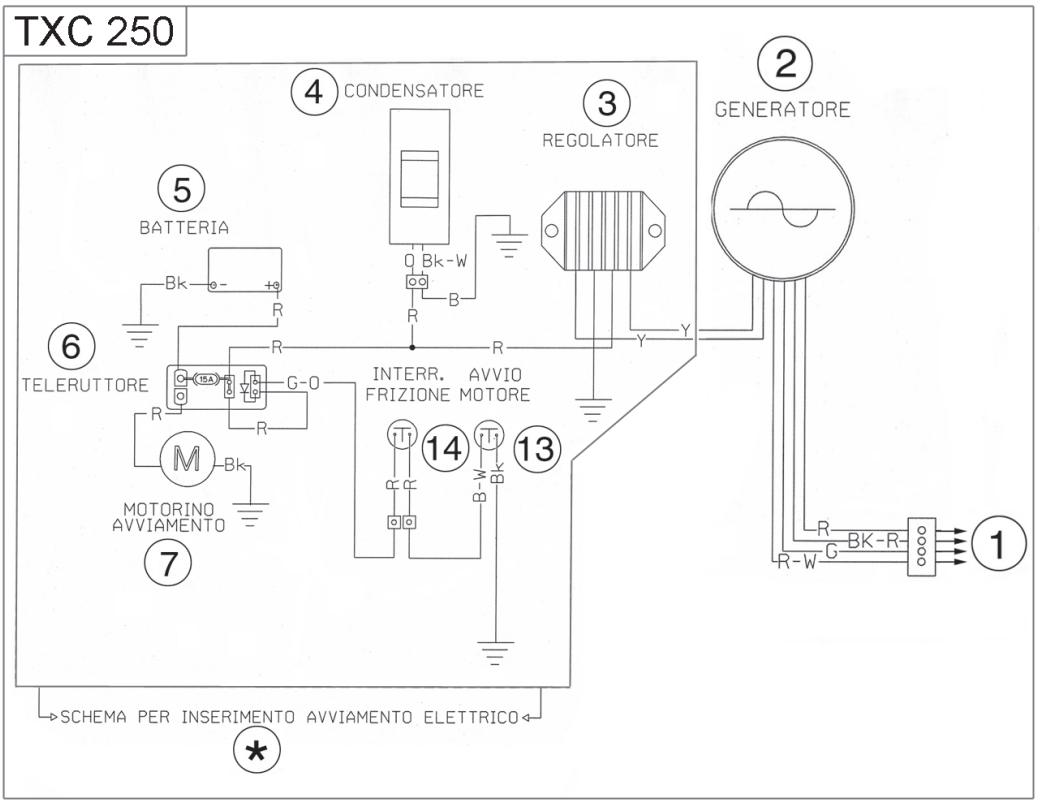

For the key to electrical cables see pages M.4÷M.5.

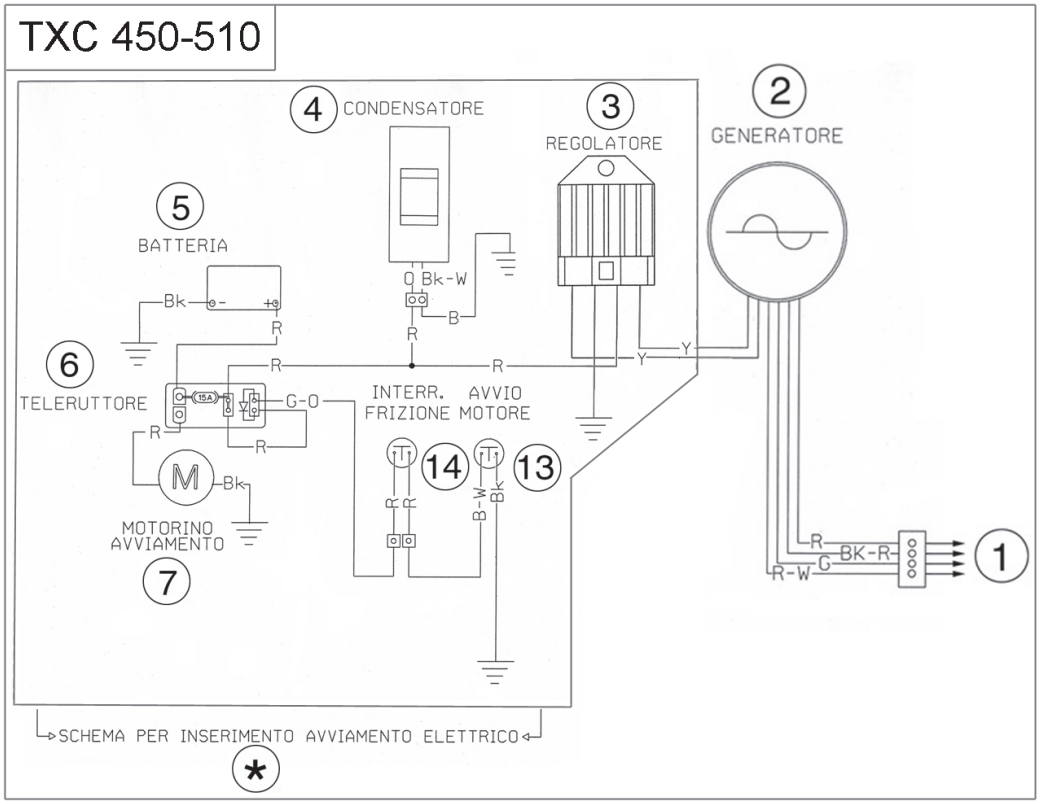

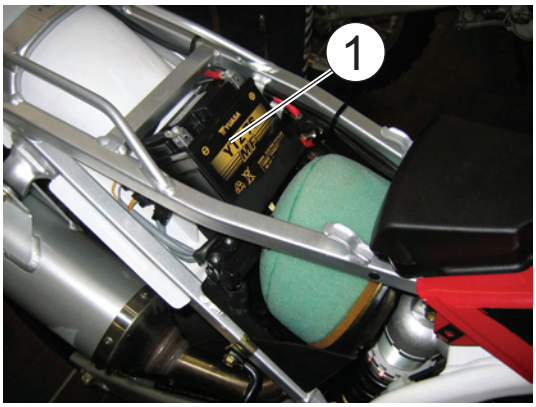

CHARGING SYSTEM CHECKS

Battery current leakage

To gain access to the battery (1), remove the saddle (see page E.15).
Remove the BLACK negative cable from the battery.
Measure the current between the NEGATIVE terminal of the battery and the NEGATIVE cable using a tester. If the reading exceed 1 mA, there is a current leakage.

If the vehicle remains unused for long periods (for more than one month and a half), it is recommended to remove battery from electrical system and store it in a dry place.

Regulated voltage

To gain access to the battery, remove the saddle (see page E.15).
When the engine is warm and working at slightly more than 3000 rpm, measure the tension between the two battery terminals positive and negative with a tester (in order to make this check the battery must be charged). If the value is not between 12.5V-14.5V, check the generator and tension - rectifying regulator (page M.15).

Generator stator coil resistance check

Remove the stator coil-main wiring harness connector then measure the resistance using a tester.

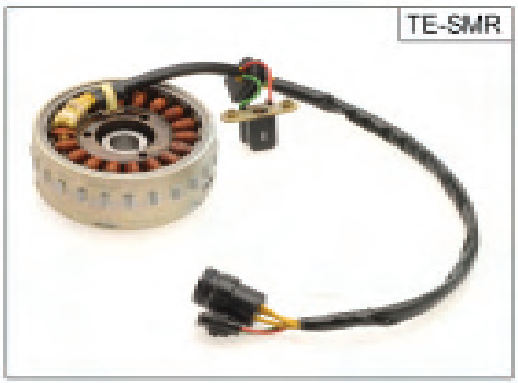

1) EXCITER - Resistance between BLACK-RED and RED-WHITE cables:
   12,7 Ω +/- 15% (TC-TXC)
1) TRIGGER - Resistance between WHITE and GREEN cables:
   100 Ω +/- 15% (TE-SMR)

2) CHARGE- Resistance between YELLOW and WHITE cables:
   0,16 Ω +/- 15% (TC-TXC)
2) CHARGE- Resistance between then YELLOW cables:
   0,65 Ω +/- 15% (TE-SMR)

3) LAMP- Resistance between YELLOW and GROUND cables on the engine:
   0,65 Ω +/- 15% (TC-TXC)

If the resistance is not between the specified values, replace the generator assy.

Generator no-load voltage performances

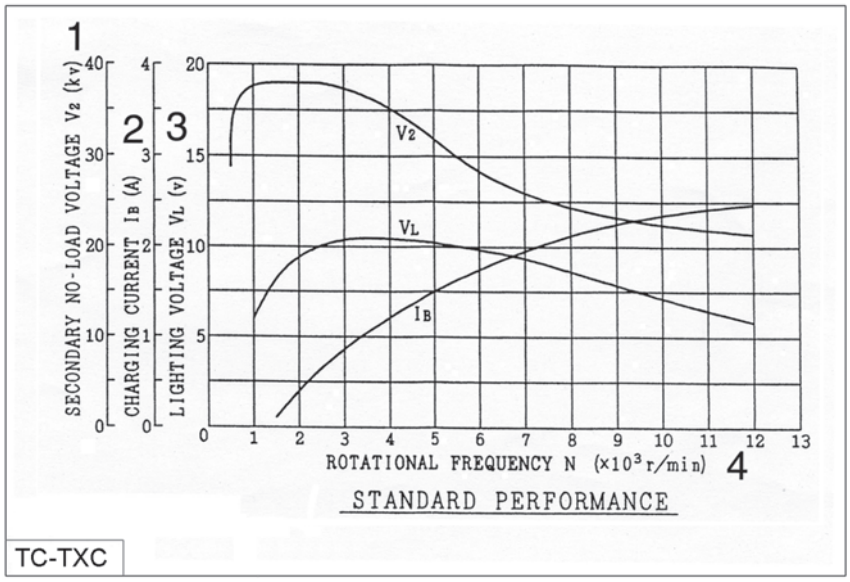

1- Secondary no load voltage
2- Charging current
3- Lighting voltage
4- Rotational frequency TC -TXC

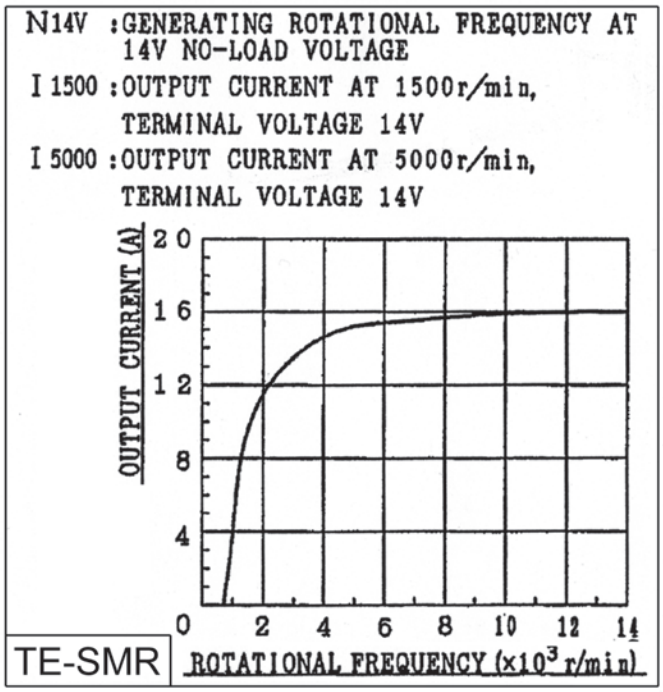

●: EVERY ENGINE OVERHAUL, CLEAN THE FLYWHEL ROTOR REMOVING ANY DEBRIS GATHERED IN CENTRIFUGATED OIL AND ATTRACTED TO THE MAGNETS.

Voltage regulator-rectifier checking (TE-SMR-TXC)
With the ignition definitely functional, whilst the battery is charged (12.5V-13V), start the engine: if the battery tension does not increase (14 V) after about two minutes, substitute the regulator. To access the regulator, remove the seat and fuel tank (pages E.15, E.23). Remove the fixing screw (1) and the regulator.

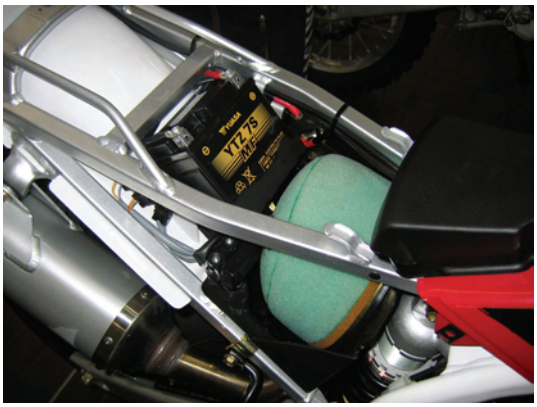

TXC

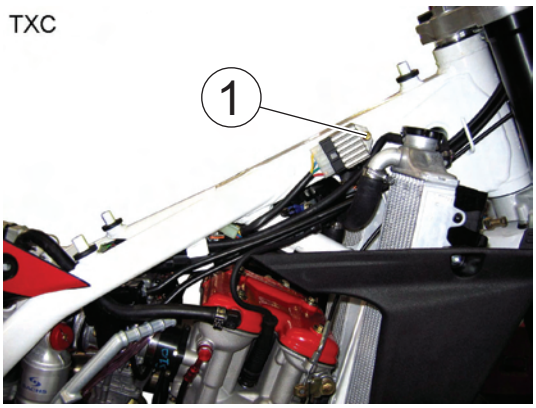

TE-SMR

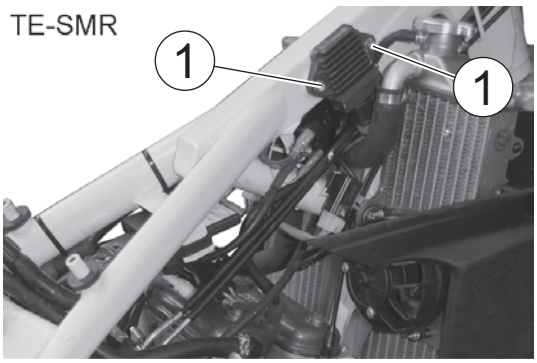

For the key to electrical cables and components, see pages M.4÷M.5.

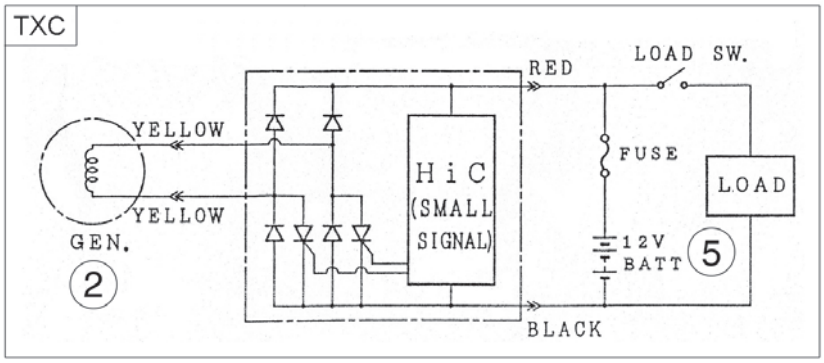

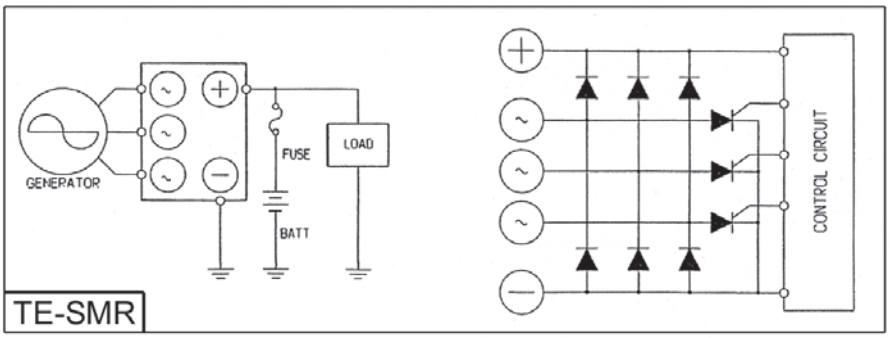

ELECTRIC STARTING SYSTEM (TXC)
The starter system consists of:
- Battery (5);
- Electric start remote control switch (6);
- Starting motor (7);
- Engine stop switch (12);
- Engine start switch (13);
- Clutch switch (14).

Pull the clutch lever until the engine starts.
Pressing the starting switch, the button energizes the electric start remote control switch causing the contact points to close and completing the starter system circuit from the strating motor to the battery.

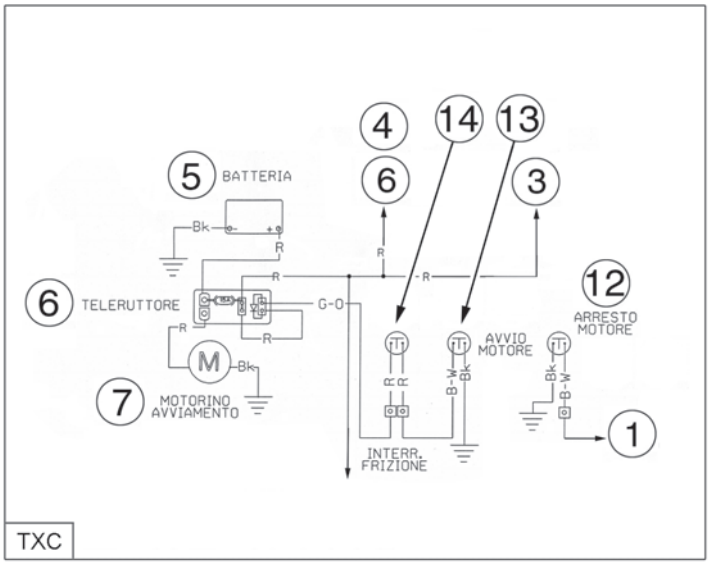

ELECTRIC STARTING SYSTEM (TE-SMR)
The starter system consists of:
- Battery (16);
- Electric start remote control switch (17);
- Starting motor (18);
- Right switch (25);
- Clutch switch (27);
- Ignition switch (26);
- Fuses (37).

For the key to electrical cables see pages M.2÷M.3, M.4÷M.5.

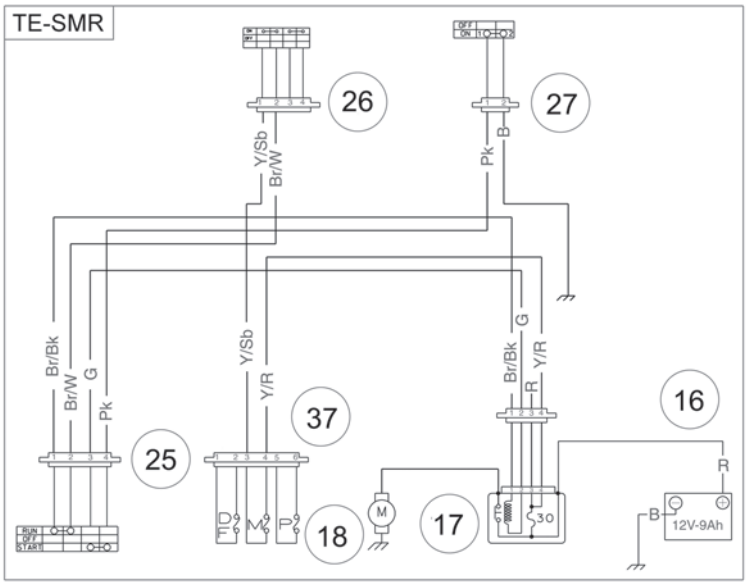

STARTER SYSTEM CHECKS

Starter motor disassembly

Use a 10 mm wrench to remove the nut (1) under the rubber cap and a 8 mm wrench to remove the starting motor and ground cable screws (2). Remove the starting motor.

Starter motor check

If a fault has been diagnosed in the starter motor, it is necessary to proceed as follows with the check:

Connect a tester between earth and the starter motor terminal.

Check that there is continuity between the positive pole and the engine earth. If there is no continuity, substitute the starter motor. Apply a small quantity of LOCTITE 243 to the bolts of the starter motor.

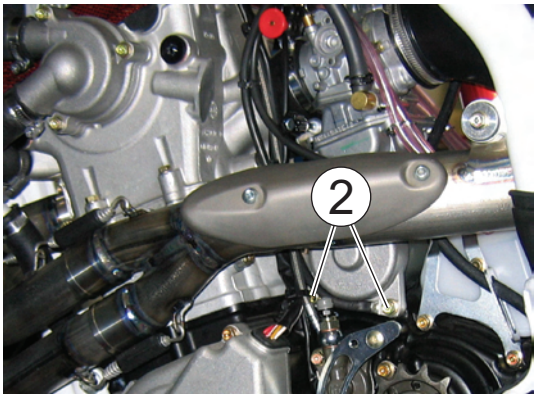

Starter motor Nominal voltage: 12V Absorbed power: 450 W
Free running check Voltage: 11,2 V Current: 30 A Speed: 12000 giri/1'
Check under load Voltage: 10 V Current: 80 A Torque: 3,5 Nm - 0,35 Kgm - 2.5ft-lb

Starter motor test diagram

1- Output (W)
2- Torque (TQ)
3- Revolution (N: r.p.m. x 1000)
4- Terminal voltage (V)
5- Load current (A)

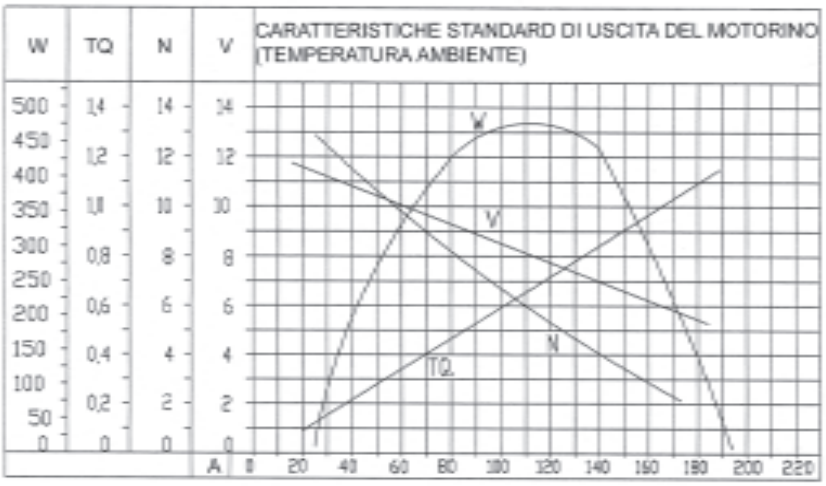

Starter motor maintenance

Maintenance operations on the starter motor involve checking the brushes for wear, that the stator and rotor do not touch, and that they are correctky insulated. It is advisable to carefully lubricate the motor's moving parts with "AGIP F.1 GREASE" grease.

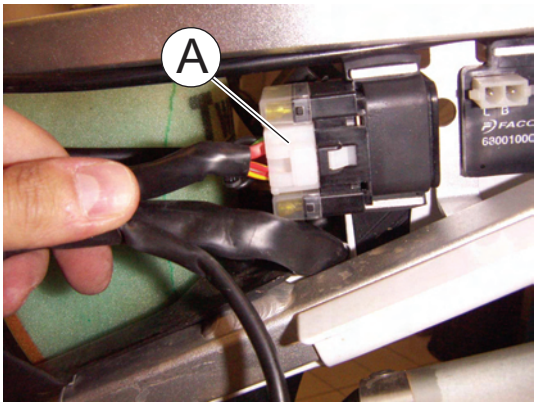

Electric start remote control switch check (TE-SMR-TXC)

Disconnect the starter relay coupling (A). Disconnect the cables from the positive and negative poles of the battery to avoid short circuits during assembly. Disconnect the cables of the starter motor and the positive cable of the battery from the relay. Apply 12 volts to the terminals (1) and (2) of the relay and check the continuity between terminals B-M.

Do not apply the battery voltage to the starter relay for more than five seconds to avoid overheating and therefore damaging the winding. Using a multi-tester, check that the winding is on open circuit or if a resistance is present. The winding is in good condition if the value of the resistance revealed is as indicated.

Multi-tester dial indication: Ohm

Starter relay resistance. Standard: 3 – 6 Ω.

1= GROUND
2= + 12 v

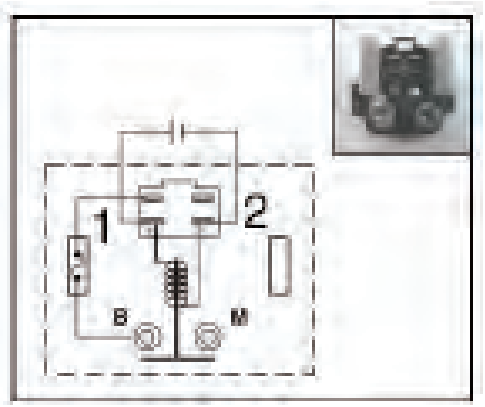

ELECTRIC START REMOTE CONTROL SWITCH WIRING DIAGRAM

ELECTRONIC IGNITION SYSTEM (TC-TXC)

In the C.D.I. system the electrical energy generated by the alternator charges the condenser.
The energy is released in a single surge at the specified ignition timing and the current flows through the primary side of the ignition coil.
A high voltage is induced in the secondary windings of the ignition coil, resulting a strong spark between the ignition spark plug gap.
The digital electronic ignition allows to change the timing curve according with the following items:
- ENGINE r.p.m.;
- CARBURETOR THROTTLE VALVE POSITION SENSOR;
- ENGAGED GEAR.

This system allows to optimize the engine performances in every condition of employment. In case of throttle valve or transmission gear failure, the ignition is able to allow the use of the motorcycle however.

The electronic ignition system consists of:
- Electronic power unit (1);
- Alternator (2);
- Voltage regulator-rectifier (3; TXC);
- Condenser (4; TXC);
- Spark plug (8);
- Gear shift position sensor GPS (9);
- Ignition coil (10);
- Carburetor throttle position sensor TPS (11);
- Engine stop switch (12).

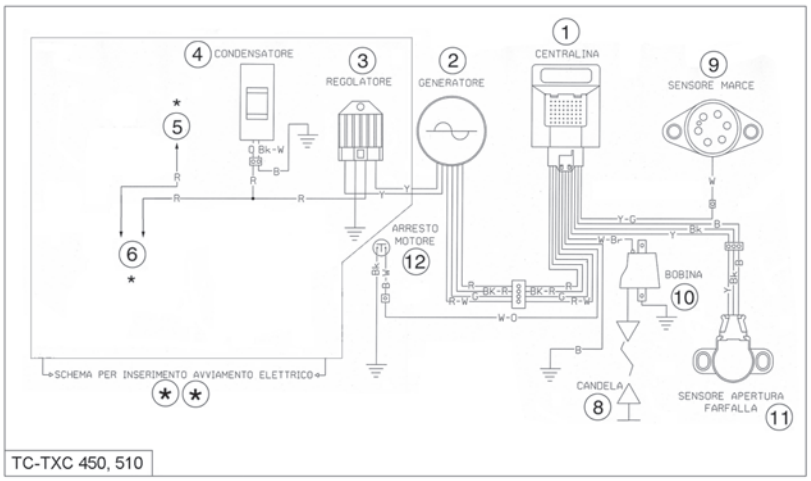

For the key to electrical cables and components, see pages M.4÷M.5.

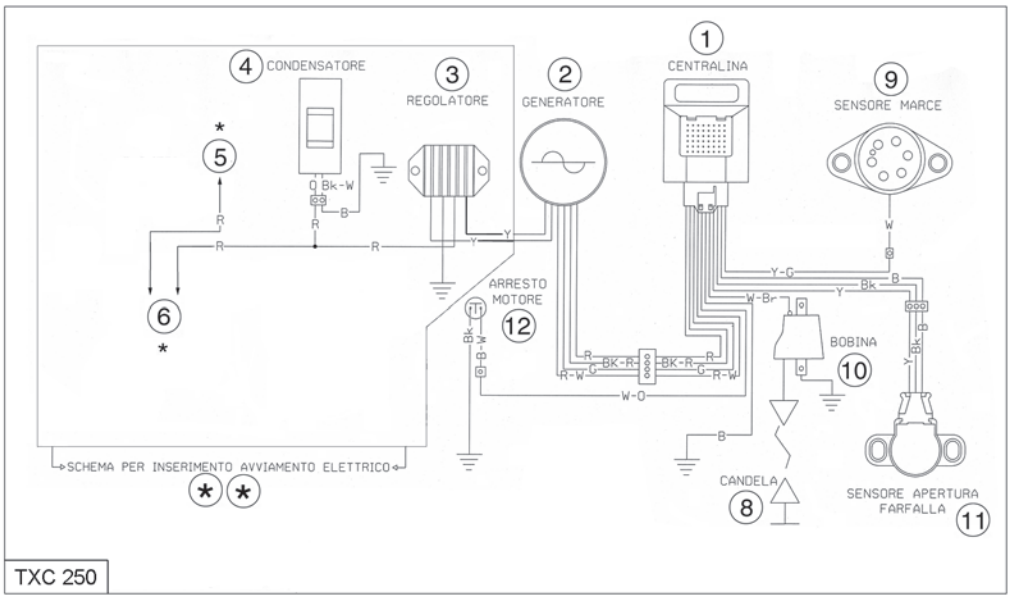

: ELECTRIC STARTER KIT (TC excluded)

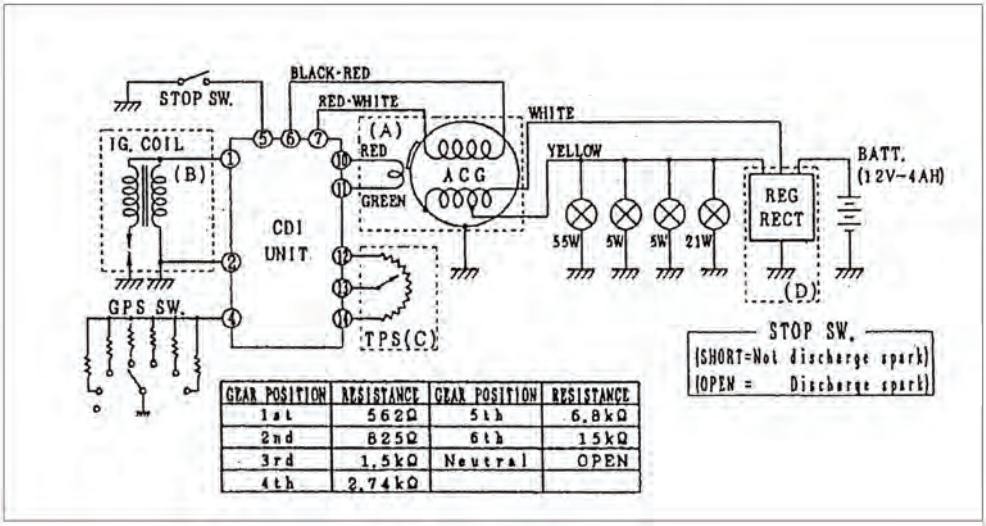

GEAR POSITION	RESISTANCE	GEAR POSITION	RESISTANCE
1st	562Ω	5th	6,8kΩ
2nd	825Ω	6th	15kΩ
3rd	1,5kΩ	Neutral	OPEN
4th	2,74kΩ		

ELECTRONIC IGNITION SYSTEM (TE-SMR)

The ignition system is controlled by the ECU (1). The system belongs to the category of the integrated systems of digital electronic ignition with advance and static distribution and gasoline electronic injection of intermittent sequential balanced type. This ignition system consists of a sensor of the crankshaft position (Pick-up), an ECU, an ignition coil and an air pressure sensor of the intake manifold. The feeding of the ignition coil is supplied by the battery with a power relay and is controlled by the ECU. The synchronization of the ignition is checked with precision with regard to the engine r.p.m. and the position of the throttle control. Besides this basic condition, also the temperature and air pressure sensors and the coolant temperature influence the synchronization of the ignition.

- Electronic power unit (1) (ECU);
- W.T.S. (33) (Water Temperature Sensor);
- Ignition coil (23);
- Fuel pump (35);
- Clutch switch (27);
- Ignition switch (26);
- O2 sensor heater (31);
- Battery (16);
- Electric start remote control switch (17);
- Starting motor (18);
- Voltage regulator-rectifier (3);
- Alternator (2);
- Gear shift position sensor (22);
- M.A.Q.S. (40) (pressure sensor +TPS sensor + air temperature sensor);
- Power relay (38);
- Fuse (37);
- R.H. switch (25);
- Injector (6);
- Fall sensor (36) (SMR).

ELECTRONIC IGNITION SYSTEM (TE-SMR)

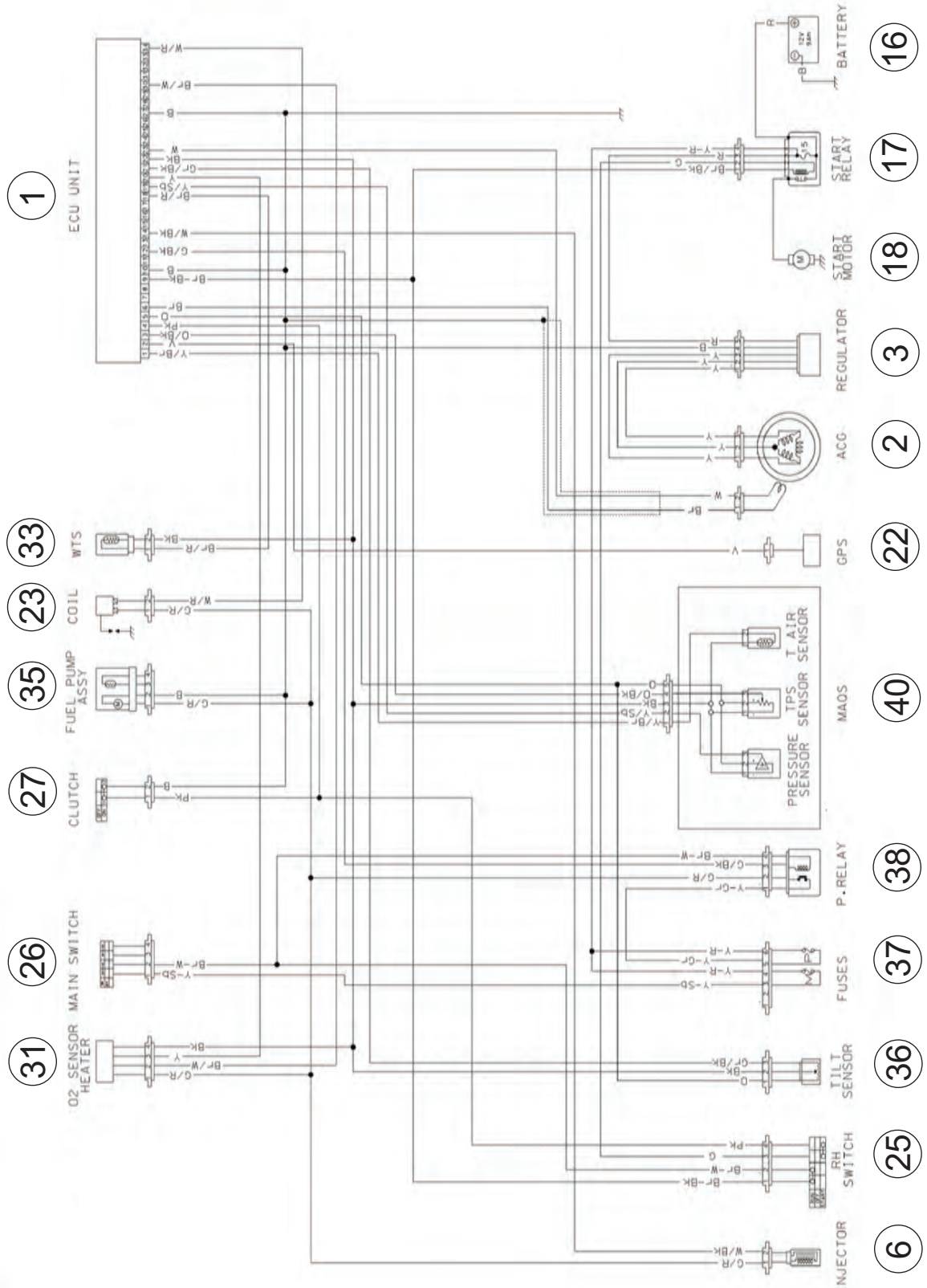

SMR

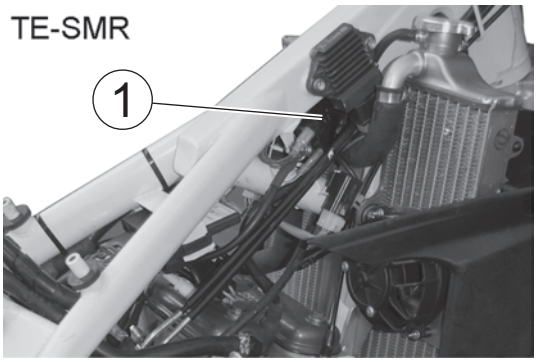

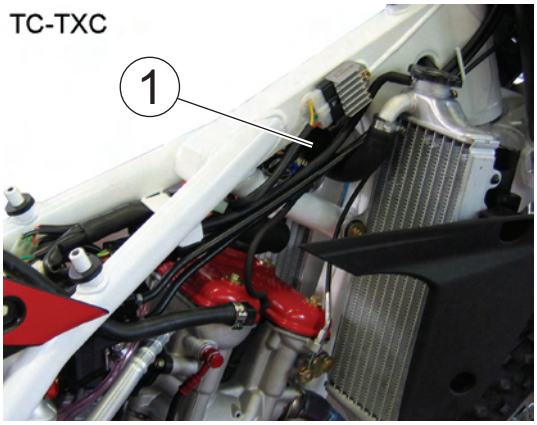

Ignition coil resistance check

To gain access to the electronic coil (1) remove the saddle and the fuel tank (see pages E.15-E.23). Detach the ignition coil from main wiring harness. Remove the fastening screws, the ignition coil then measure the resistance in the primary and secondary windings using a tester.

- Primary winding resistance: 4.5 Ω ±15% a 20°C.
- Secondary winding resistance: 5 KΩ ±20% a 20°C (without spark plug cap cable).

If the resistance is not between the specified values, replace the electronic coil. Also, check the resistance of the terminal cap contact with the spark plug.

- Terminal cap resistance: 4.5÷5.5 KΩ ±5% a 20°C. If the resistance is not between the specified values, replace the electronic coil.

NOTE: The ignition coil is fastened under the fuel tank. On an area totally exempt from oxidization or paint; if the earth contact is not perfect this could cause damage to the coil and ignition faults as well.

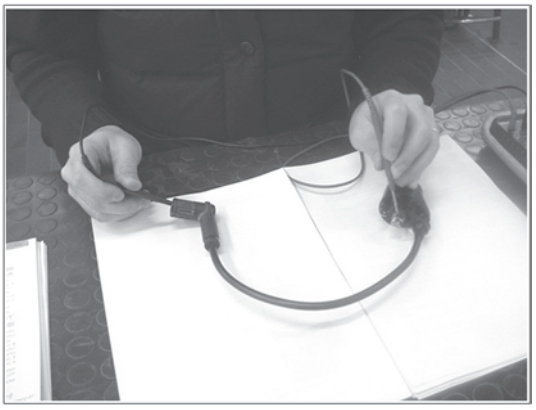

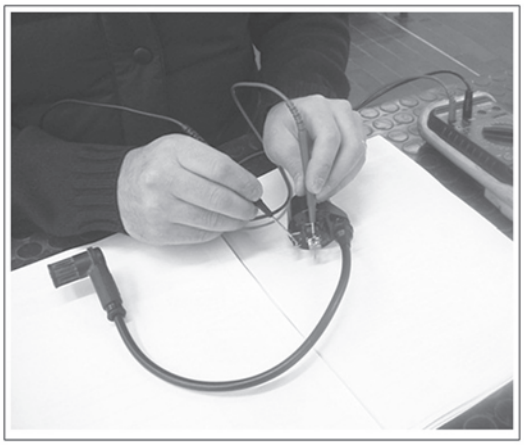

Electronic unit (ECU)

To gain access to the electronic unit (1) remove the saddle and fuel tank (see pages E.15-E.23).
This unit consists of a condensor, a pick-up signal rectifier circuit, and ignition advance circuit synchronised with the pick-up signal and a switching circuit for discharging the condensor.

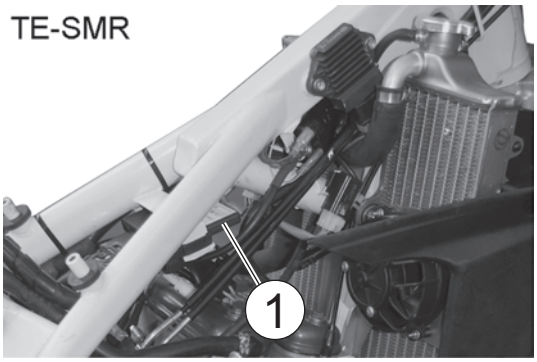

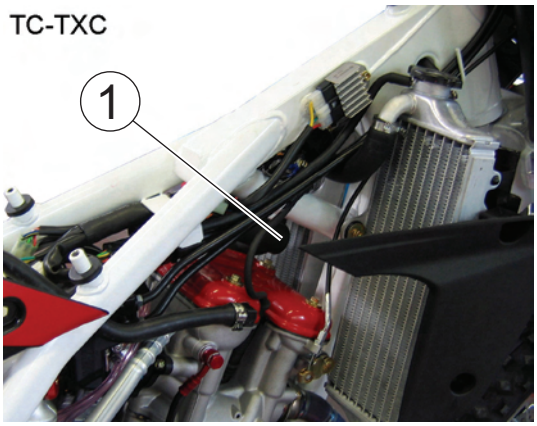

ELECTRONIC UNIT C.D.I. WIRING DIAGRAM (ECU) (TC-TXC)

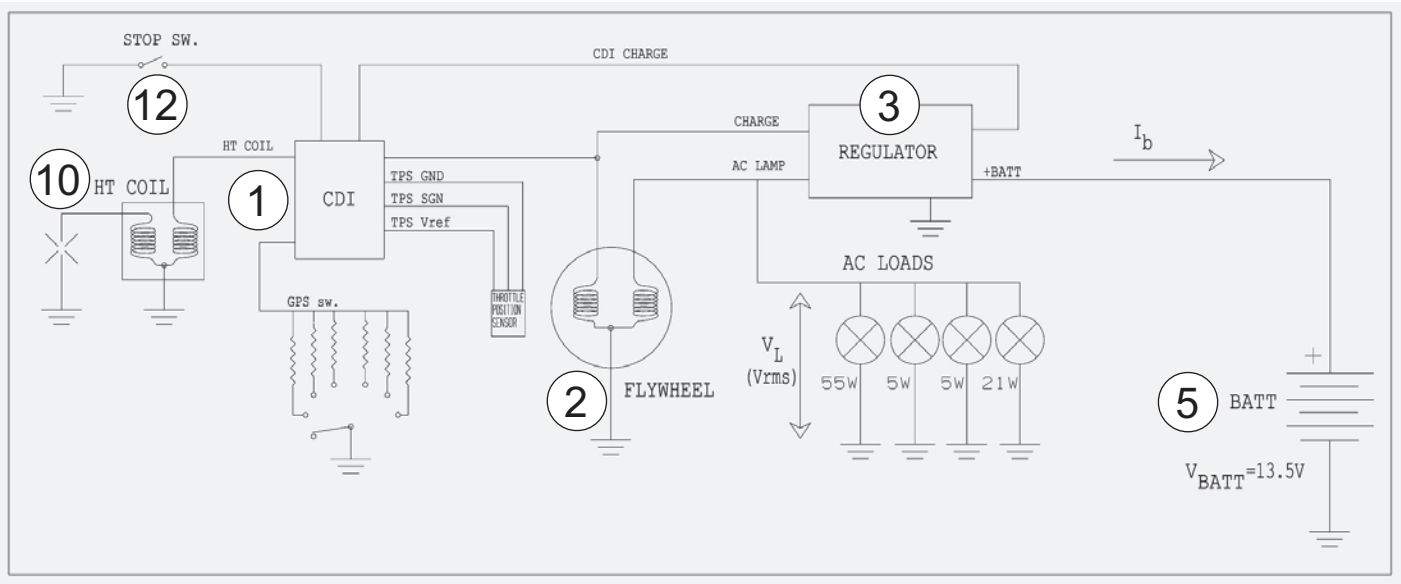

1. Electronic unit
2. Alternator
3. Voltage regulator
5. Battery
10. Electronic coil
12. Engine stop

ELECTRONIC POWER UNIT WIRING DIAGRAM (ECU) (TE-SMR)

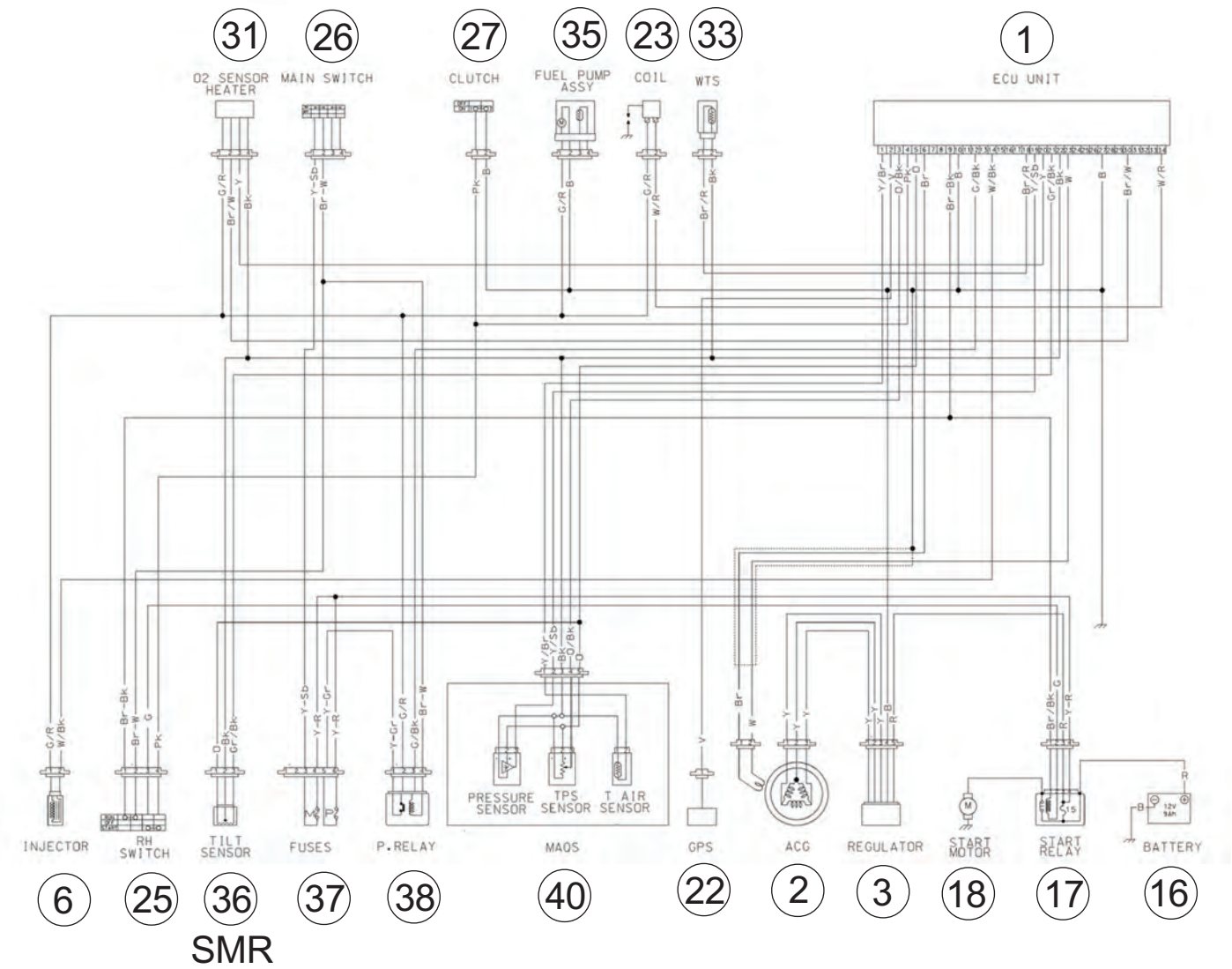

- Electronic power unit (1) (ECU);
- W.T.S. (33) (Water Temperature Sensor);
- Ignition coil (23);
- Fuel pump (35);
- Clutch switch (27);
- Ignition switch (26);
- O2 sensor heater (31);
- Battery (16);
- Electric start remote control switch (17);
- Starting motor (18);
- Voltage regulator-rectifier (3);
- Alternator (2);
- Gear shift position sensor (22);
- M.A.Q.S. (40) (pressure sensor +TPS sensor + air temperature sensor);
- Power relay (38);
- Fuse (37);
- R.H. switch (25);
- Injector (6);
- Fall sensor (36) (SMR).

Voltage regulator (TE-SMR-TXC)

The voltage regulator (1) contains the diodes to rectify the current produced by the generator.
It contains also an electronic device operating in relation to the battery tension: if battery has a “low” charge, recharge current will be high; on the contary if battery will be charged the current will be lower.

: Do not disconnect the battery cables when engine is on, since the regulator should be irreparably damaged.

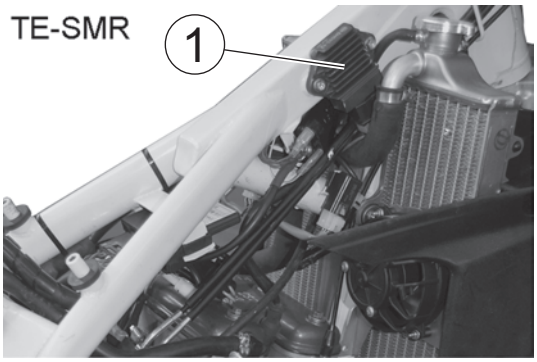

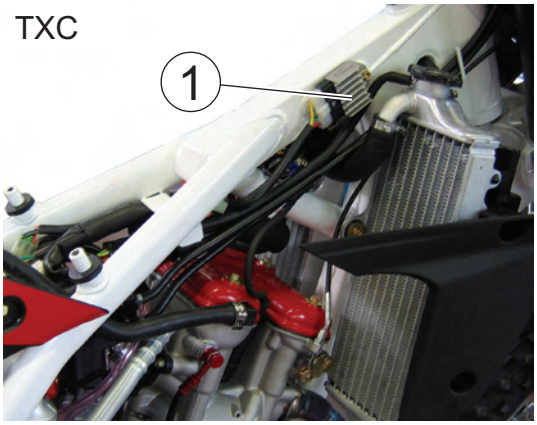

VOLTAGE REGULATOR-RECTIFIER WIRING DIAGRAM

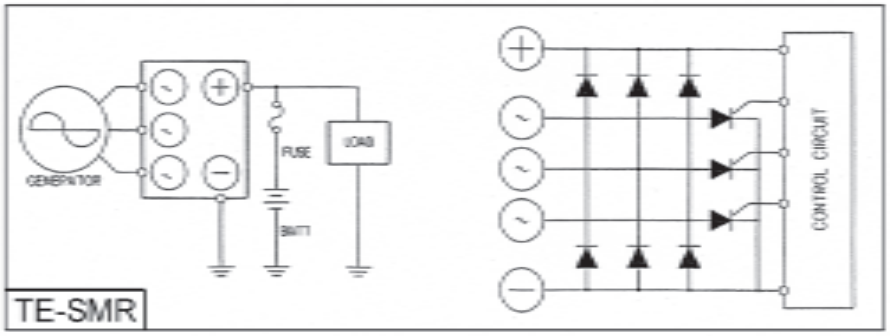

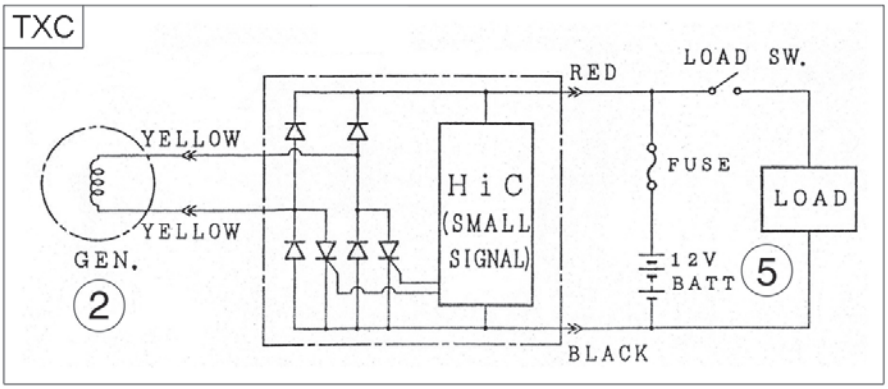

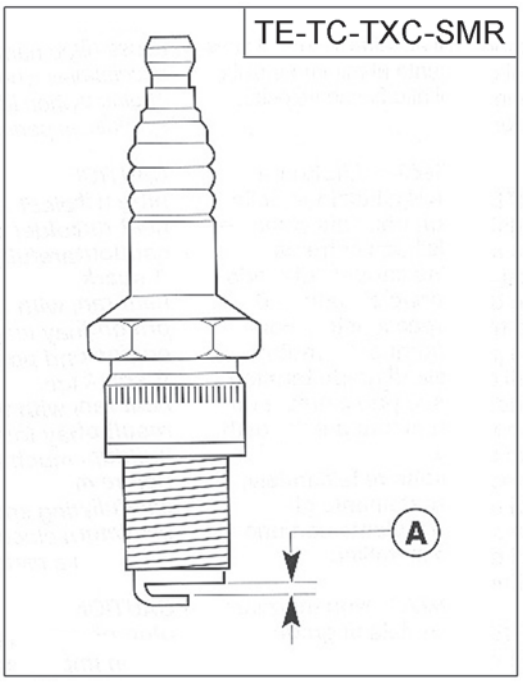

Spark plug

Use "NGK" CR8EB spark plug (1). Check distance "A" (0.7 mm / 0.027 in.) between electrodes. A wider gap may cause difficulties in starting engine and in overloading coil.A gap that is too narrow may cause difficulties when accelerating, when idling the engine or when performing at low speeds. Clean the dirt away from the base of the spark plug before removing it from the cylinder. It is very useful to examine the state of the spark plug just after it has been removed from the engine since che deposits on the plug and the colour of the insulator provide useful indications concerning the heat rating of the plug, carburation, ignition and general engine condition. Before refitting the plug, thoroughly clean the insulator using a brass-metal brush. Apply a little graphite grease to the spark plug thread; fit and screw the spark plug by hand then tighten to the torque of 10÷12 Nm- 7.4÷8.9 ft/lb. Loosen the spark plug then tighten it again to the torque of 10÷12 Nm- 7.4÷8.9 ft/lb. Spark plugs which have cracked insulators or corroded electrodes should be replaced.

Gear shift position sensor checking (GPS: Gear Position Sensor)
Set the tester on "Ohm" position then detach the 6 ways connector (1) from the main wiring harness (the gear shift position sensor is fastened on the alternator cable with a clamp). Ground a tester terminal on the engine then insert the other one in the hole where is the gear sensor BLACK cable (2). The lever (3) is placed on the left-hand side of the engine. After every shift, the lever automatically returns to horizontal position. First gear is engaged by pushing the lever downwards; all the other gears are engaged, by pushing the lever upwards. See the table below for the data to be checked.

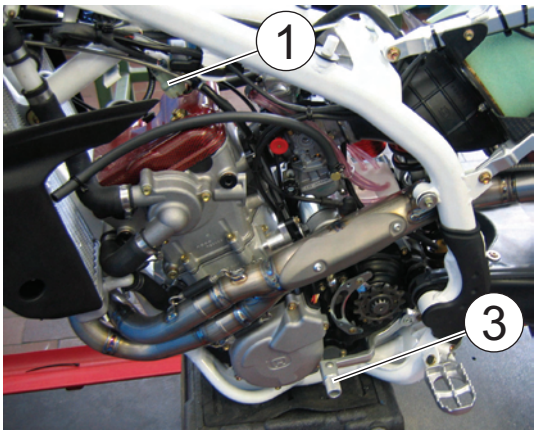

A	NEUTRAL (open circuit)	∞	312÷319 Ω
B	1st gear	556÷568 Ω	725÷739 Ω
C	2nd gear	817÷833 Ω	1,31÷1,34 KΩ
D	3rd gear	1,48÷1,51 KΩ	2,18÷2,23 KΩ
E	4th gear	2,71÷2,77 KΩ	3,61÷3,68 KΩ
F	5th gear	6,75÷6,88 KΩ	6,58÷6,71 KΩ
G	6th gear	14,8÷15,1 KΩ	15,2÷15,5 KΩ
		TC-TXC	TE-SMR

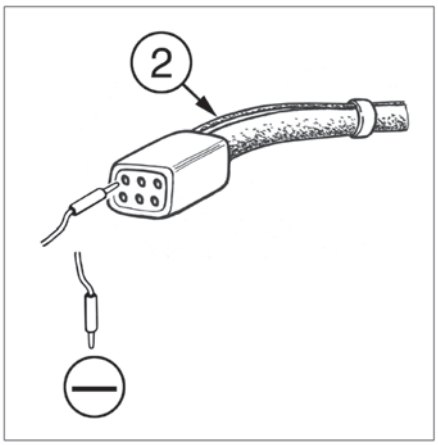

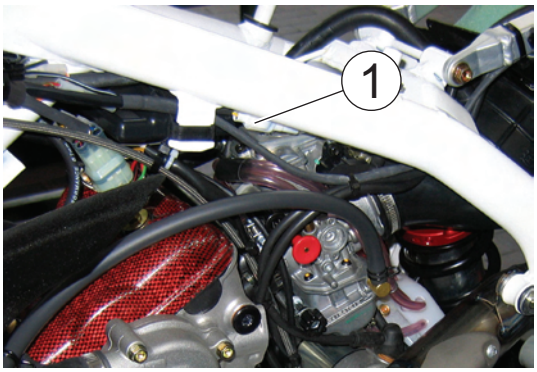

Throttle Position Sensor checking (TPS: Throttle Position Sensor) (TC-TXC)

Set the tester in “Ohm” position then detach the throttle position sensor cable (1) from the main wiring harness. Set the two tester terminals in corrispondence of YELLOW (A) and BLACK (B) cables and check for the correct values (see table).

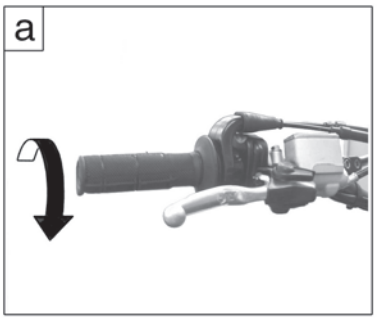

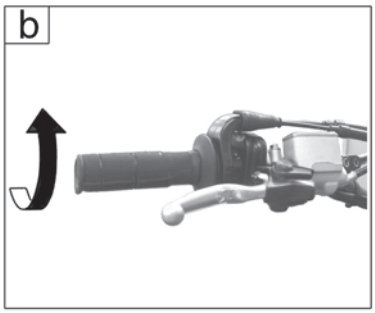

a- throttle control grip in CLOSED position	890-990 Ω
b- throttle control grip in COMPLETELY OPEN position	
"KEIHIN“ MX 37- MX 41	3,4÷4,4 KΩ +/- 5%

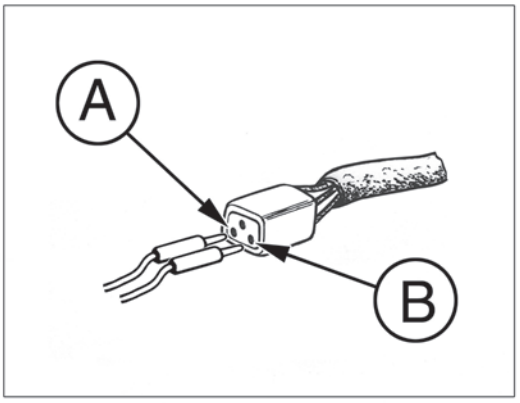

A	**Yellow**
B	**Black**

BATTERY (TE-SMR-TXC)

The sealed battery (1) does not require any maintenance work. If the vehicle remains unused for long periods, it is recommended to remove battery from electrical system and store it in a dry place. After an intensive use of the battery, it's advisable a standard low charge (12V-6Ah battery: 0.6A for 8 hours). Rapid recharging is advised only in situations of extreme necessity since the life of lead elements is reduced (6A for 0.5 hours with 12V-6Ah batteries).

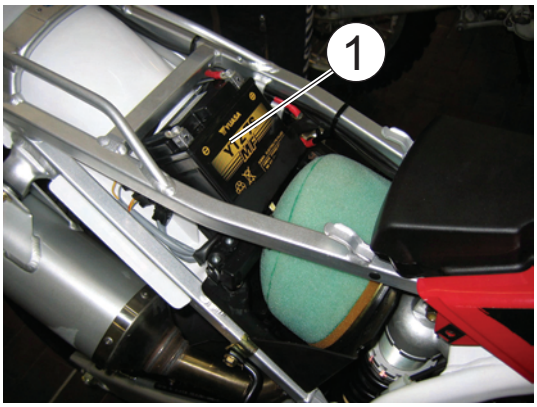

Battery recharge

To gain access to the battery (1):
- remove the saddle (see page E.15);
- first remove the BLACK negative cable, then the RED positive cable (when reassembling, first connect the RED positive cable, then the BLACK negative cable);
- remove the battery (1) from its housing.

Check, using a voltmeter, that battery voltage is not less than 12,5 V. If not, the battery needs to be charged. Using a battery charter with a constant voltage, first connect the RED positive cable to the battery's positive terminal then the BLACK negative cable to the battery's negative terminal. Apply to the constant voltage of 14,4 V a current of "x" Ampere as results in the belowe diagram (depending on the amount of carging required). The voltage reaches a constant value only after a few hours, therefore it is suggested NOT to measure it immediately after having charged or discharged the battery. Always check the charge level before reinstalling it on the vehicle. The battery should be kept clean and the terminals coated with grease.

INDICATIVE VALUES RELATIVE TO THE CHARGING TIME DEPENDING ON BATTERY STATUS		
VOLTAGE * (V)	% CHARGE	CHARGE TIME (THE "AMPERE" RATED CURRENT TO APPLY IS: 0,1x BATTERY RATED CAPACITY)
> 12,7	100	–
~ 12,5	75	4h
~ 12,2	50	7h
~ 12,0	25	11h
~ 11,8	0	14h

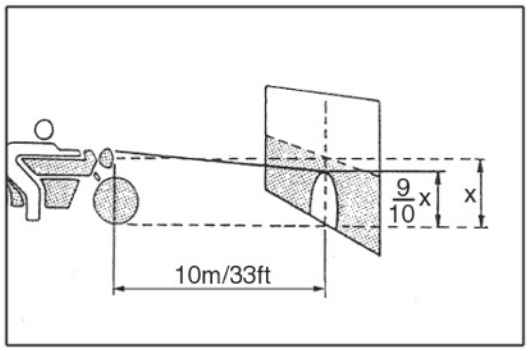

HEADLAMP, TAIL-LAMP (TE-SMR)

Headlamp adjustment

The front headlamp is fitted a dipping bulb for main and dipped beams and a pilot/side lamp bulb.

Particular care should be taken to adjust the headlamp beam; adjust as follows:

- position the motorcycle at 33 ft from a flat wall;
- check that the bike is on a level surface and that the headlamp axis is at right angles to the wall;
- the bike should be in a vertical position;
- measure the distance from the ground to the centre of the headlamp lens and then mark a cross at the same height on the wall;
- switch on to dipped beam; the upper limit of the beam should be at a height which is so greater than 9/10 of the height from the ground of the centre of the headlamp.

Adjust the headlamp aiming by turning screw (A) to lower or lift the high beam.

Headlamp bulbs replacement

To gain access to the healamp bulbs, proceede as follows:

- remove the upper fastening screw of the the headlamp carrier to the instrument panuel support (A);
- push forward the headlamp carrier (B) and pull it towards the high (C) in order to uncouple from the two lower supports.
- remove the headlamp carrier;
- remove the two filaments bulb connector; (2) and the boot (3);
- release the bulb holding spring (4) and then the bulb itself.

To replace the parking light bulb (5) extract it from the inside cover.

After replacement, reverse operations for reassembly.

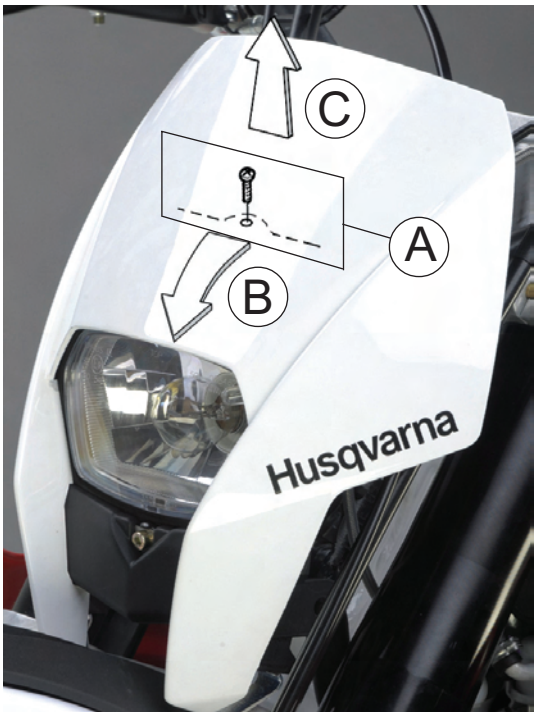

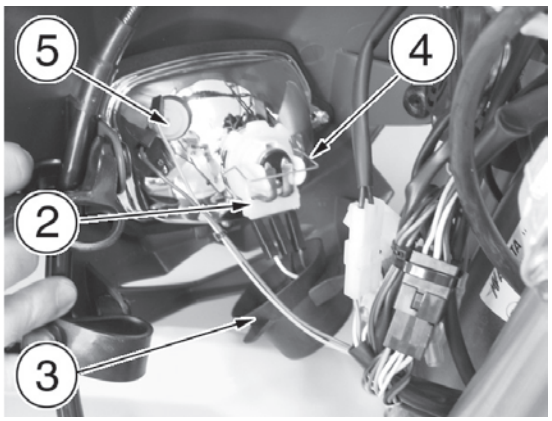

Rear tail light bulb replacement
To gain access to the tail light bulb (12V-5/21W), proceed as follows:
- remove the two fastening screws (1) and the rear lens (2);
- pull the lamp (3) inside, turn it counterclockwise then remove it from the lamp holder.

After replacement, reverse operations for reassembly.

Make sure not to tighten the screws excessively.

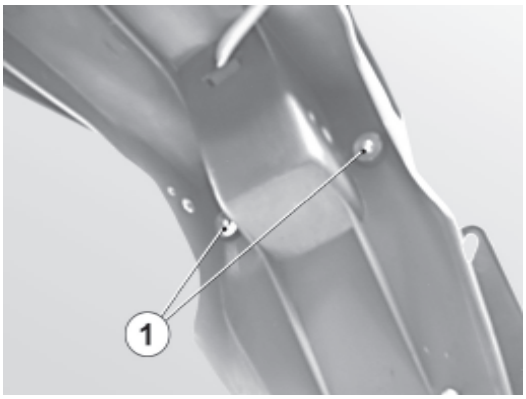

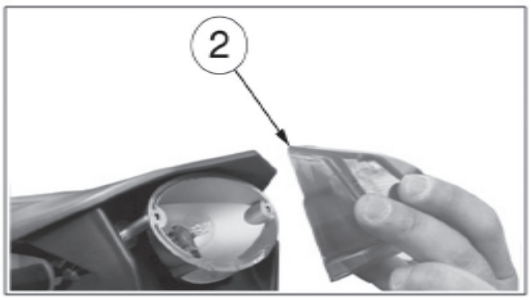

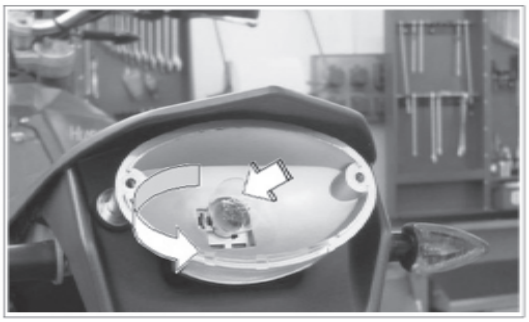

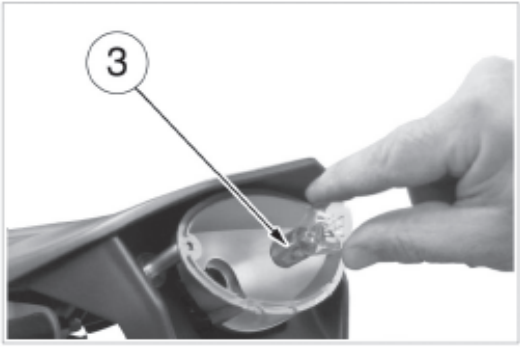

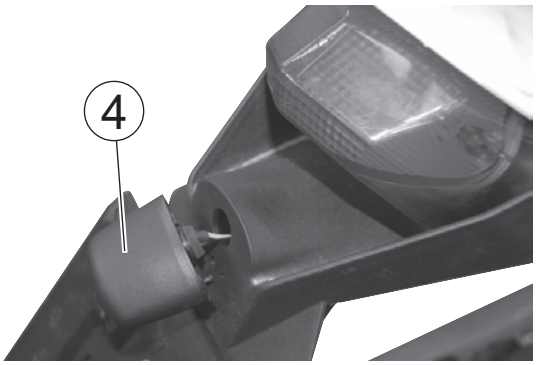

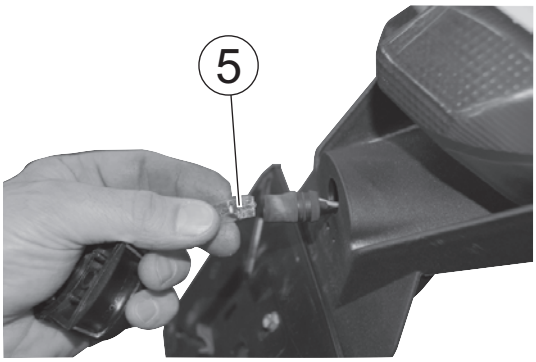

Replacing the licence plate light lamp
Remove the licence plate light support (4) by extracting it from the tail of the motorbike.
Extract the lamp holder with the lamp from the support.
Turn the lamp (5) to remove it from the lamp holder.

After replacing the lamp, reassemble all the parts in the inverse order.

HANDLEBAR COMMUTATORS

Measure the commutators continuity using a tester. In case of anomalies, replace the defective part.

1- Engine start and stop switches

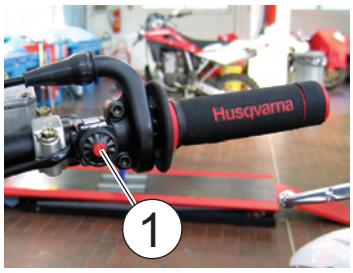

1. Engine ignition button (TXC)

TC-TXC

POSIZIONE \ COLORE	B-W	Bk
ON	○—○	
OFF		

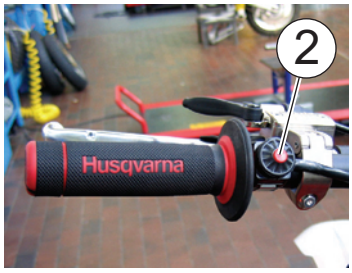

2. Engine stop button (TC-TXC)

TE-SMR

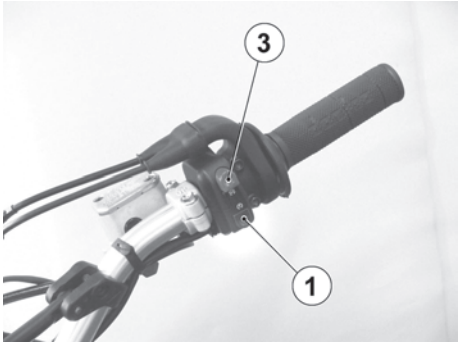

2- R.H. Commutator

1. Engine ignition button
3. Engine start-stop button

START SWITCH	B	Bk	TENS. NOM. Nom. voltage
OFF			
ON	○—○		12V
CORRENTE NOMINALE Current load 3 A			

ENGINE STOP SWITCH	Bk	B	W-Bk	TENS. NOM. Nom. voltage
		○—○		300V (12V)
	○—○			300V (12V)
CORRENTE NOMINALE - Current load = 0.6 A (3 A) = 0.6 A (3 A)				

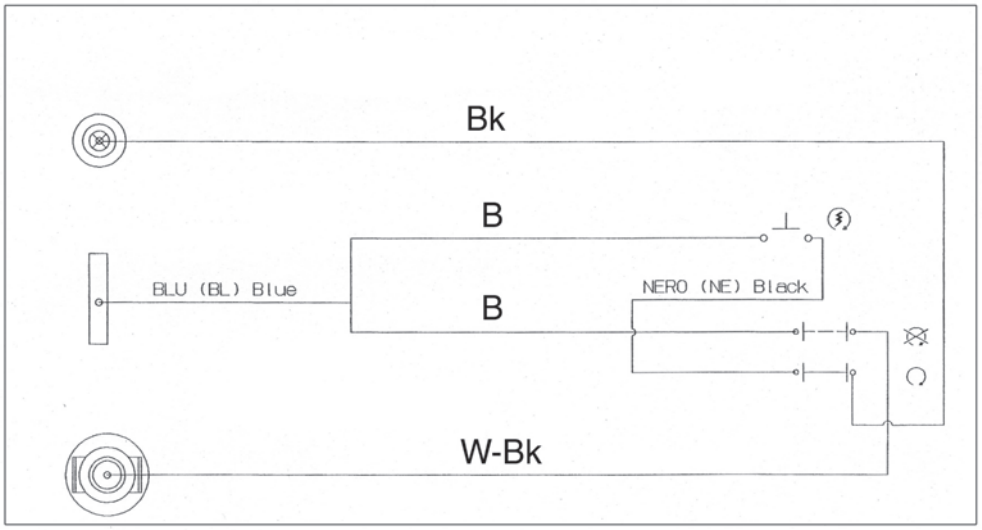

3- L.H. Commutator

TE-SMR

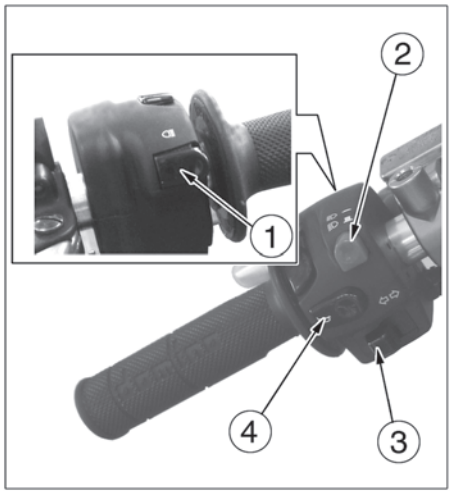

1. High beam flash (self cancelling)
2. Selection control high beam

   Selection control low beam
3. Left turm signals (automatic return)

   Right turm signals (automatic return)

   To deactivate the turn signals, press the control lever after its returning to center.
4. Warning horn

LIGHTING SWITCH

POSIZIONE \ COLORE	1		2	
	G-W	W	G-Bk	Y
•				
≡D			○—○	
☼	○—○		○—○	

CARICO NOMINALE-Rated load
• = 0 W
≡D = 30 W
☼ = 30+80 W

FLASHER SWITCH

POSIZIONE \ COLORE	Sb	B-Bk	R	CARICO NOMINALE Rated load
⇦	○—○			52 W
N PREMUTO (OFF)				
⇨		○—○		52 W

HORN SWITCH

POSIZIONE \ COLORE	Gr	G	CARICO NOMINALE Rated load
A RIPOSO (Off)			
PREMUTO (On)	○—○		60 W

DIMMER SWITCH

POSIZIONE \ COLORE	W	W	Bk	CARICO NOMINALE Rated load
≡D HI	○—○			80 W
≡D LO		○—○		80 W

PASSING SWITCH

POSIZIONE \ COLORE	W	W-B	CARICO NOMINALE Rated load
A RIPOSO (Off)			
PREMUTO (On)	○—○		80 W

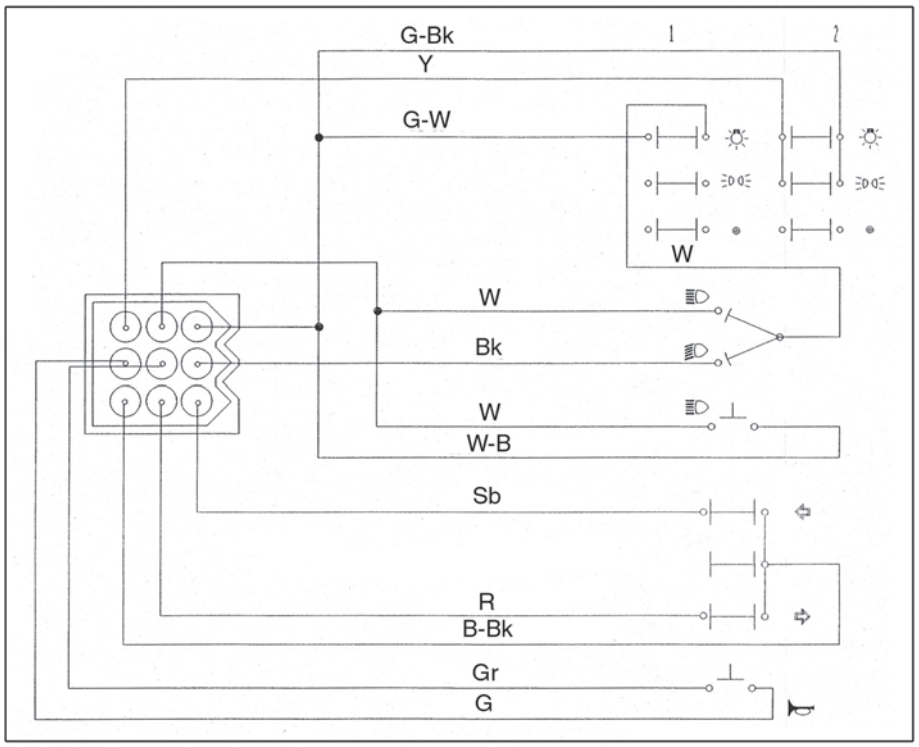

Cable colour coding	
B	Blue
Bk	Black
B-Bk	Blue-Black
B-W	Blue-White
G	Green
G-Bk	Green-Black
G-W	Green-White
Gr	Grey
Y	Yellow
R	Red
Sb	Sky blue
W	White
W-B	White-Blue
W-Bk	White-Black

NOTES

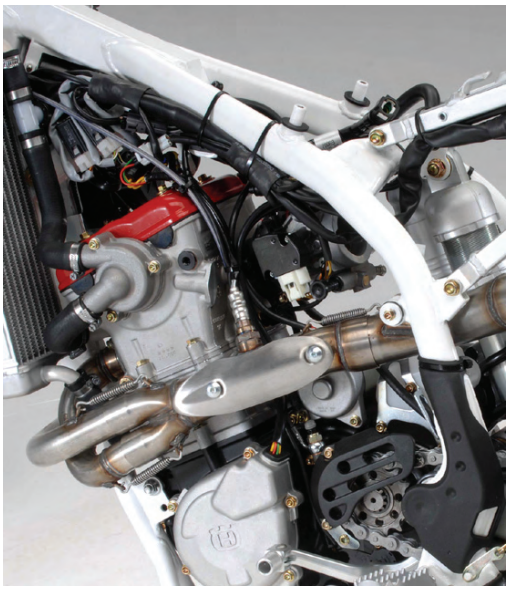

CONNECTORS

- When a connector is connected, check that it clicks into position.
- Check the connector for corrosion, dirt or a broken cover.

COUPLINGS

- Block couplings – ensure that the block is released before disconnecting it to push it completely home when connecting it.
- When disconnecting a coupling, ensure that the body of the coupling is gripped and do not pull it apart by the leads.
- Check that the terminals of the couplings are not slack or bent.
- Check that the terminals are not corroded or dirty.

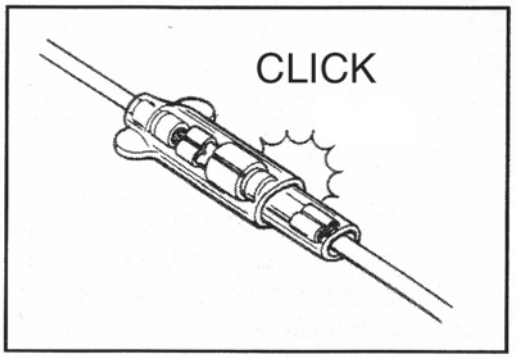

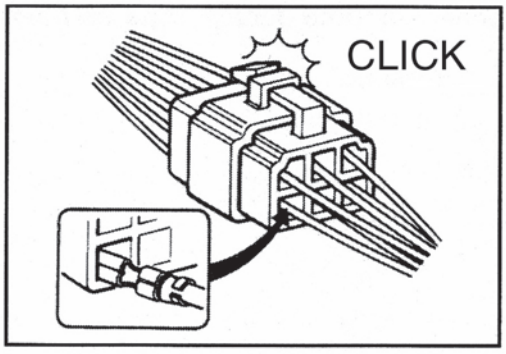

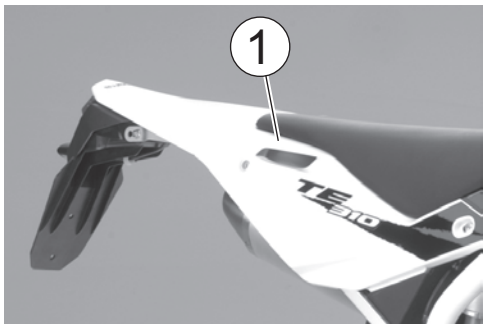

FUSES

• When a fuse (1) burns out, always investigate why the fuse has burnt out. Find the cause, repair and then substitute the fuse.
• Do not utilise a fuse of a different capacity from the original one.
• Do not utilise wire or any other substitute for the fuse.

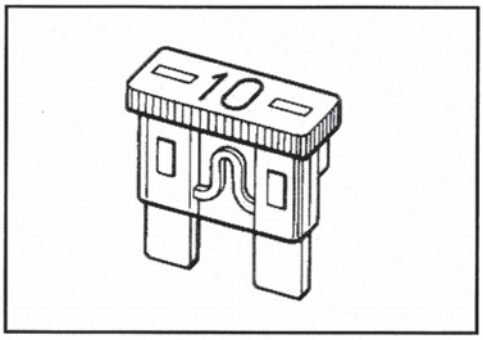

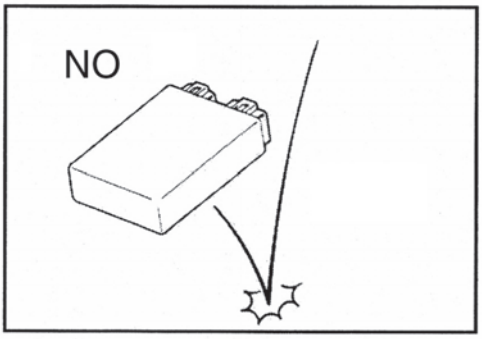

SEMICONDUCTOR PARTS

• Do not drop semiconductor parts such as those incorporated in the ECU or in the voltage regulator-rectifier.
• When checking these parts, carry out the instructions to the letter. The lack of using the correct procedurecan cause grave damage.

BATTERY (TE-SMR-TXC)

- when assembling, first remove the BLACK negative cable, then the RED positive cable;
- when reassembling, first connect the RED positive cable, then the BLACK negative cable.

Digital instrument, warning lights (TE-SMR)
The motorcycle is equipped with a digital instrument; on the instrument are located 3 warning lights too: high beam, blinkers and fuel reserve.

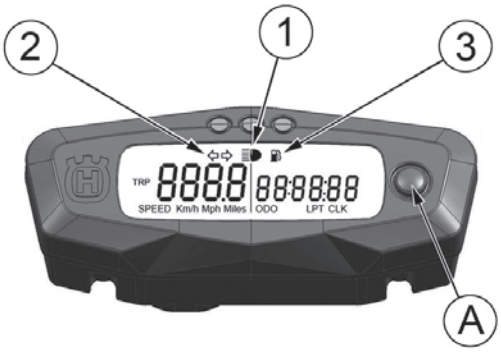

1- BLUE warning light “HIGH BEAM”
2- GREEN warning light “BLINKERS”
3- ORANGE warning light “Fuel reserve” (1,8 l - 1.58 Imp. qt - 1.9 U.S. qt)
Turning the ignition key to the position “IGNITION” the instrument display illuminates (amber colour).

- When linked to the battery, for the first 2 seconds, the instrument shows the version of the checking SW; after the check, the instrument shows the last planned function.

- When the motorcycle engine is OFF, the instrument doesn’t also show its functions.

- To select the instrument functions and to set to zero the functions, use the SCROLL knob (A).

- The instrument functions are the following, as shown below.

1- SPEED / ODO (figure 1, page 15)
2- SPEED / CLOCK (figure 2, page 15)
3- SPEED / TRIP (figure 3, page 16)
4- SPEED / CHRONO (figure 4, page 16)
5- SPEED / RPM (engine r.p.m. numerical value) (figure 5, page 16)
1- SPEED / ODO (figure 1, page 15)
.....

IMPORTANT:
in case of FUEL INJECTION SYSTEM malfunction on the right side of the instrument display will be displayed the warning message “FAIL”: (see page M.39).

1- SPEED (Km/h or mph) / ODO (figure 1) (*)

- SPEED: motorcycle speed- maximum value: 299 Km/h or 299 mph;
- ODO: odometer- maximum value: 99999 km;

To replace kilometers with miles or miles with kilometers proceed as follows:
1) set to figure 1, stop the engine and push the knob SCROLL (A);
2) turn the ignition key to the IGNITION position, holding pushed the button SCROLL (A) until the symbol “Km/h” will be displayed;
3) then the symbols “Km/h” and “Mph Miles” will be displayed alternatively.
Push again the SCROLL (A) button when the unit you wish to use is displayed.

(*): Replaces what described at page 15 of the User and Maintenance manual.

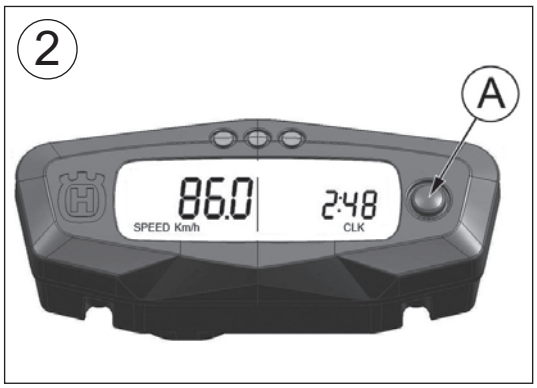

2- SPEED / CLOCK (figure 2)
- SPEED: motorcycle speedmaximum value: 299 Km/h o 299 mph;
- CLOCK: clock- Reading from 0:00 to 23:59:59;

To reset the clock, push the knob SCROLL (A) for more than 3 seconds in order to increase the hours; release the knob and then, after 3 seconds, it is possible to increase the minutes;

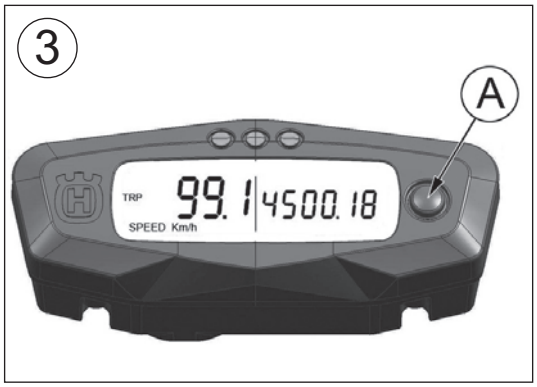

3- SPEED / TRIP 1 (figure 3)
- SPEED: motorcycle speedmaximum value: 299 Km/h o 299 mph
- TRIP 1: distance- maximum value: 999.9 km (the data will be lost after battery detachment).

To setup the TRIP, push the SCROLL (A) button holding down more than 3 seconds

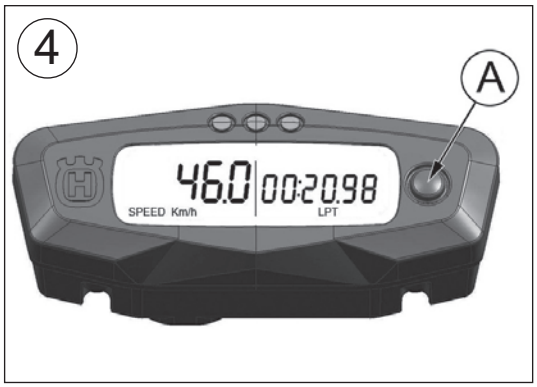

4- SPEED / CHRONO (STP) (figure 4)
- SPEED: motorcycle speedmaximum value: 299 Km/h o 299 mph;
- STP 1: miles/kilometers covered time;
- Reading from 0:00 to 99:59:59 (the data will be lost after battery detachment).

To activate the function STP 1, push the knob SCROLL (A) for more than 3 seconds.
- 1st step: function ON;
- 2nd step: stop to the counters;
- 3rd step: STP 1 zero-setting; TRIP 1 and AVS 1 data zero-setting;
- 4th step: function ON;
- 5th step: stop to the counters;

.....
and so following

5- SPEED / DIGITAL RPM (figure 5)
- SPEED: velocità- Indicazione max: 299 Km/h o 299 mph
- RPM NUMERICO: MIN. 500, MAX 14250

The instrument display shows even then informations of the “Neutral” condition and of any possible “Malfunction” of the FUEL INJECTION SYSTEM; **this last condition is showed with absolute priority with respect to any other information.**

NEUTRAL: if the speed is under 20 Km/h (12,5 mph), the “Neutral” condition the instrument displays the N character before the value of the speed.

MALFUNCTION: in case of FUEL INJECTION SYSTEM malfunction on the right side of the instrument display will be displayed the warning message “FAIL”.

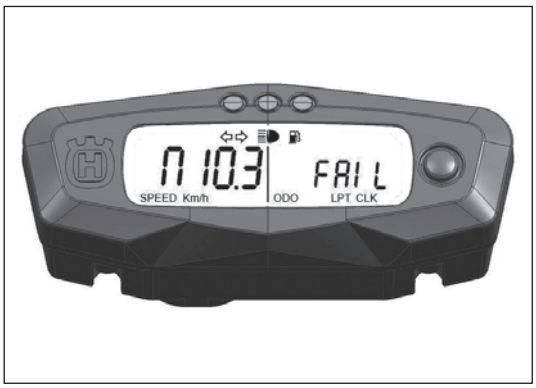

Instructions for the instrument setting
Upon turning on the instrument, **if the operation DID NOT already take place**, it is necessary to set the instrument associating it with the relative motorcycle by selection of the codes illustrated in the figures shown.
The identification codes appear on the display of the instrument at 2 second intervals: **when the required code appears, press the button (A) on the instrument**.

BE VERY CAREFUL WHEN SELECTING. <u>THE OPERATION CAN ONLY BE EXECUTED ONCE</u>.

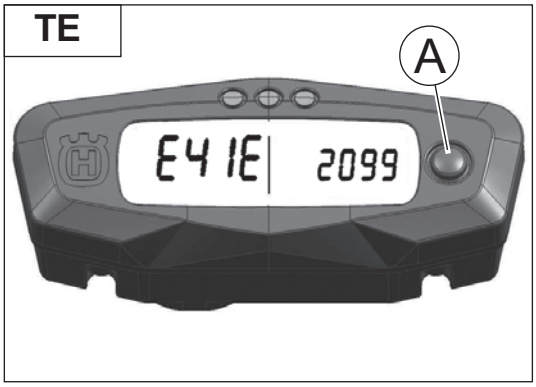

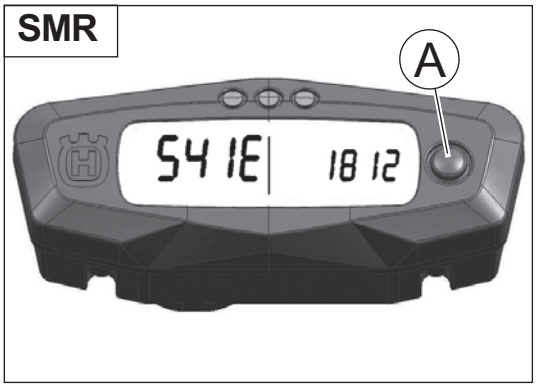

Instrument replacement (TE-SMR)
- remove the upper fastening screw of the the headlamp carrier to the instrument panuel support (A);
- push forward the headlamp carrier (B) and pull it towards the high (C) in order to uncouple from the two lower supports.
- remove the headlamp carrier;

Remove the two fastening screws (3), deconnect the connector (4) and remove the instrument (5).

Reassemble the instrument in the reverse order that was shown for disassembling.

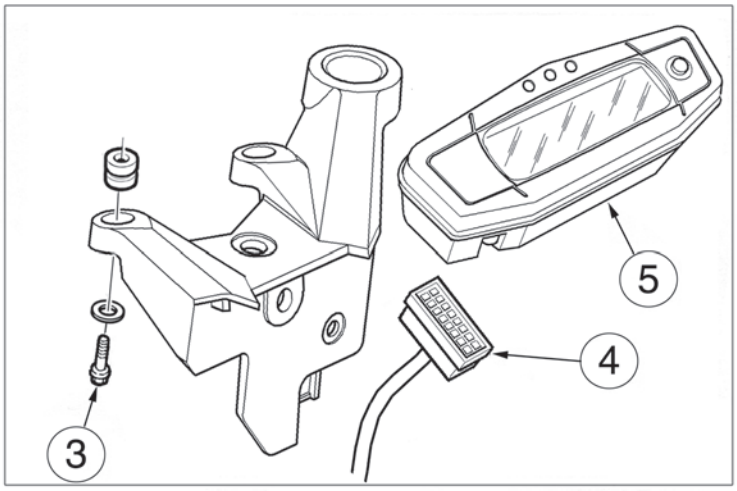

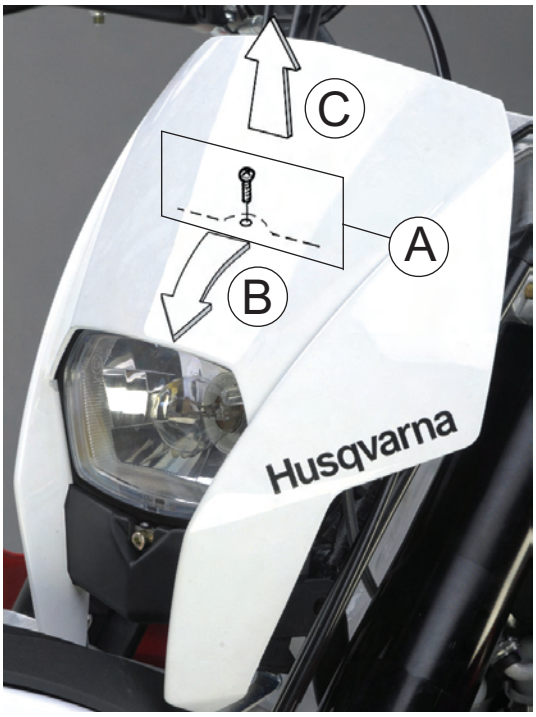

LOCATING OPERATING TROUBLES

CHARGING SYSTEM
Fast battery discharging:
1) current leakage (see page M.12);
2) incorrect voltage (see page M.12);
3) generator: no continuity (see page M.12);
4) incorrect generator no-load voltage performances (see page M.14);
5) faulty voltage regulator (see page M.15)

Battery overloading:
1) faulty voltage regulator (see page M.15);
2) faulty battery (see page M.12).

STARTER SYSTEM
Starting motor don't start:
1) faulty electric start remote control switch (see page M.18);
2) loosened starting motor cable;
3) faulty starting motor (see page M.17);
4) discharged battery (see page M.29).

ELECTRONIC IGNITION SYSTEM
Weak Ignition spark or no ignition spark:
1) incorrect main wiring harness connections;
2) faulty spark plug or incorrect spark plug heat range or incorrect spark plug gap (see page M. 26);
3) faulty ignition coil (see page M.22);
4) faulty spark plug cap (see page M.22).

WIRE HARNESS TC-TXC-SMR 450R

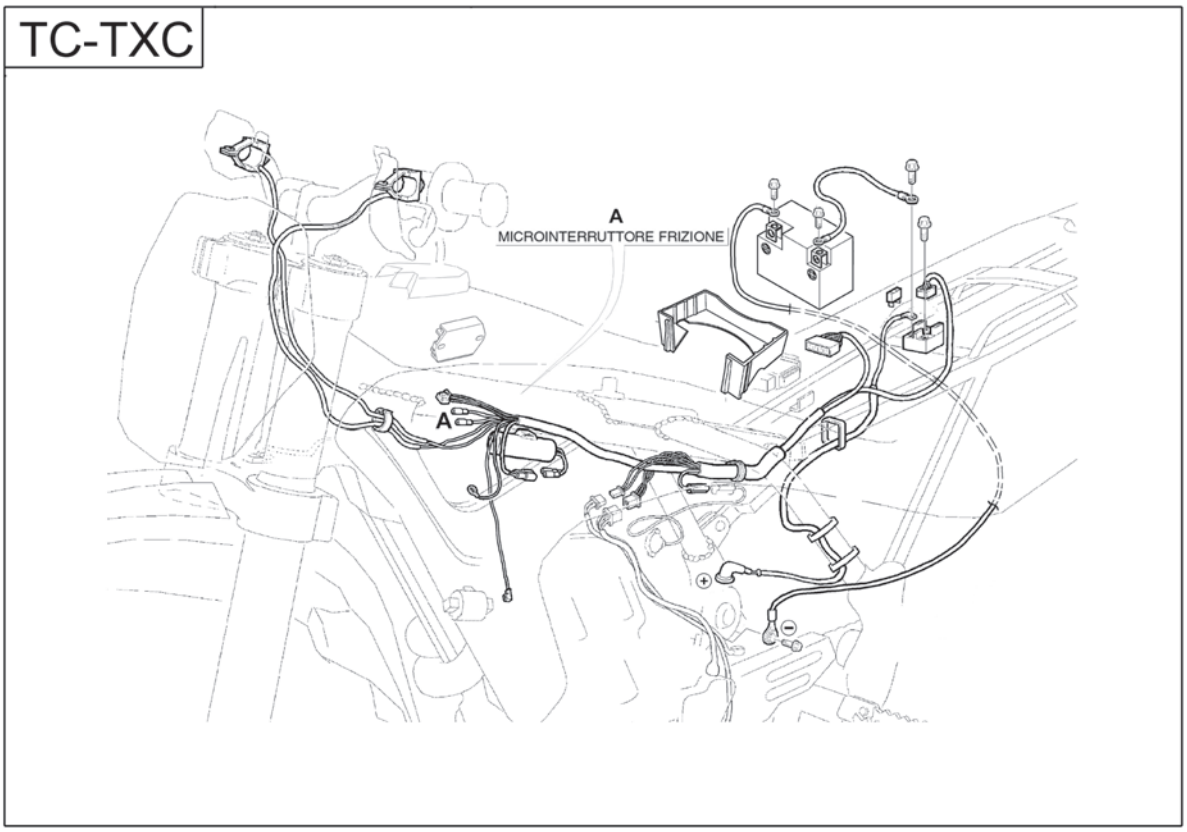

WIRE HARNESS TE-SMR

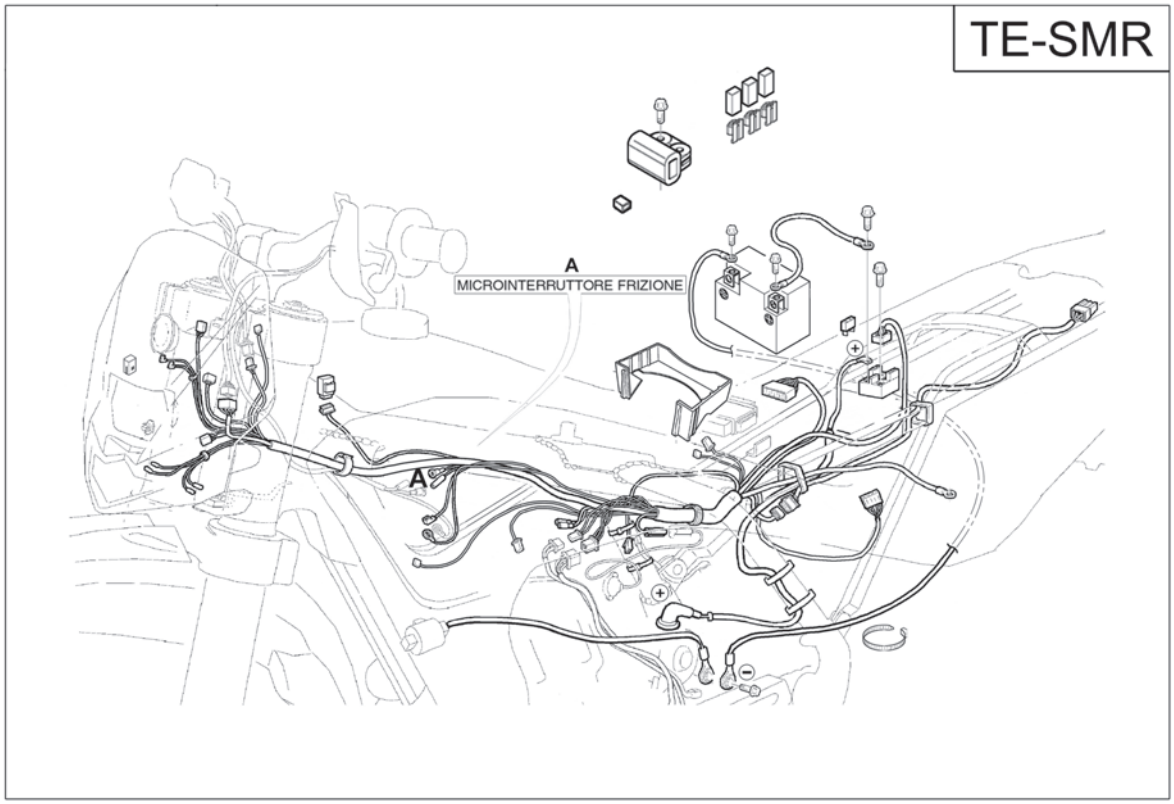

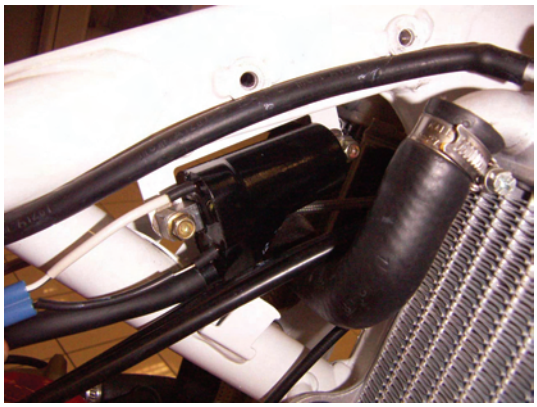

CABLE RUNWAY AND ASSEMBLING INSTRUCTIONS FOR THE "TE/SMR" ELECTRIC PARTS

• H.T. coil positioning

Connect the H.T. colil as shown in the picture.

• Relay positioning (3 parts)

R.S. relay.

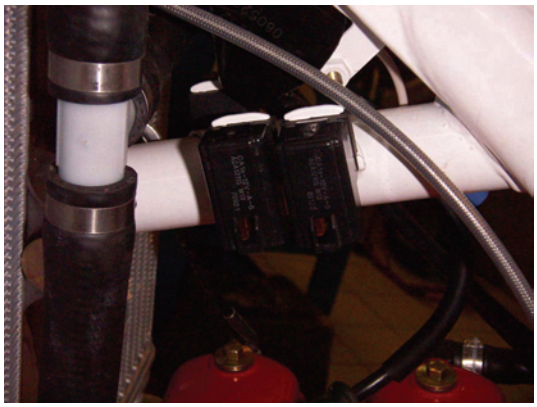

L.S. relay.

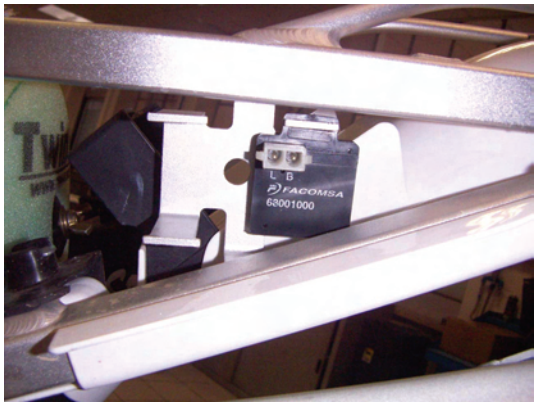

• Turn indicators flash device positioning

Turn indicators flash device.

• **Injection central unit positioning**
Injection central unit installed with flat side downward.

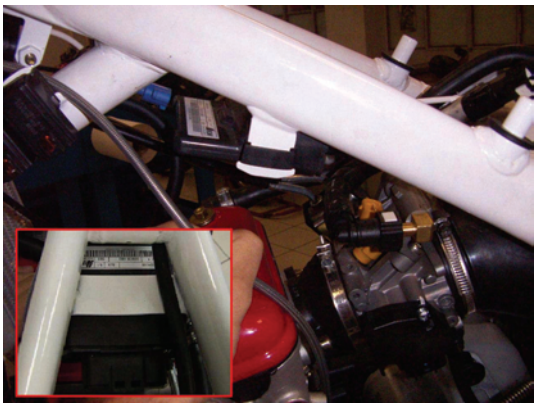

• **Remote control switch positioning**
Install the remote control switch as shown.

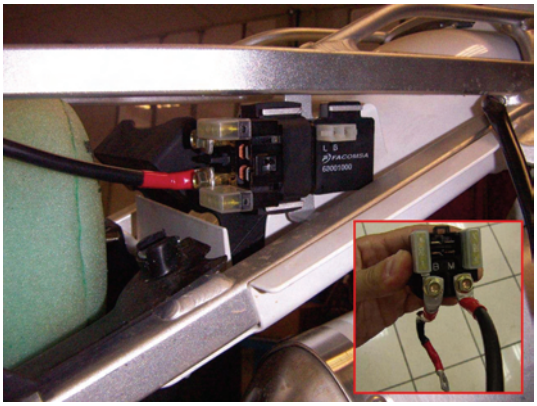

• **Positioning the voltage rectifier**
Voltage regulator with dissipation plate covered in thermal grease
.

• **Fastening the starter motor-remote control switch cable**
Connect the starter motor-remote control switch cable as shown in the picture.

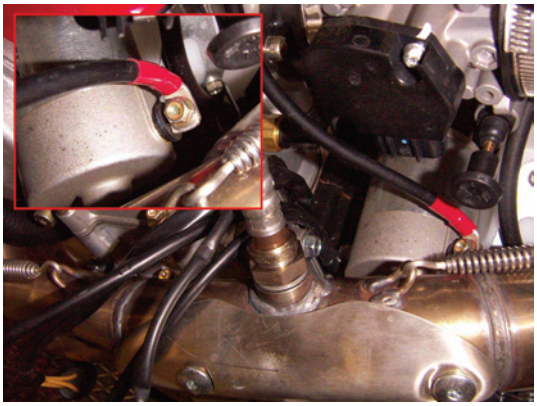

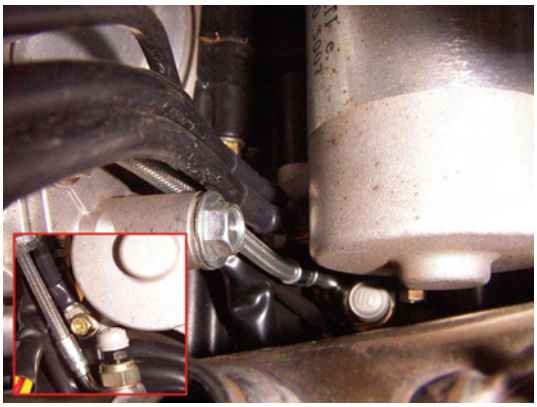

• **Securing of earth cables between motor-frame-battery.**
Earth cables between motor and frame and between motor and battery are secured to the left screw of the starter motor.

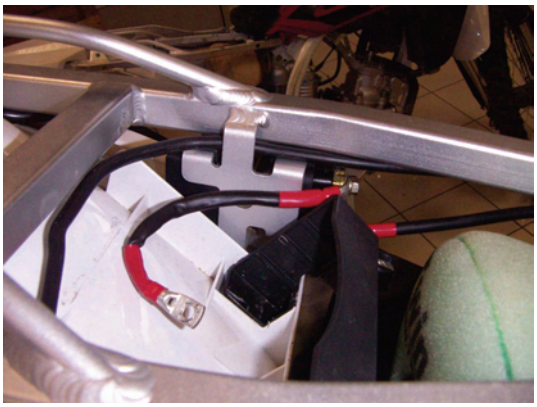

• **Threading of negative battery cable.**
Threading of earth cable between motor and negative cable of battery.

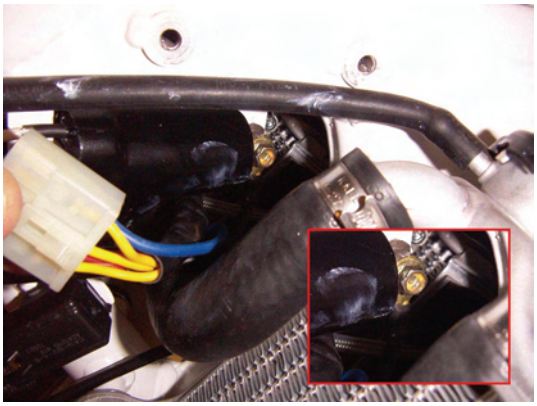

• **Securing of earth cable to regulator cable.**
Secure the earth cable of the regulator to the right screw of the injection coil.

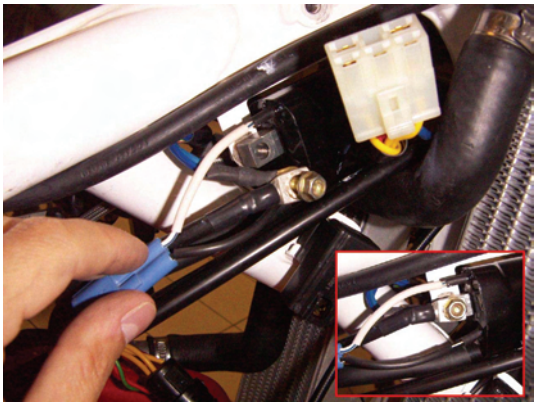

• **Securing of earth cables between motor and frame. Electric earthing.**
Secure the earth cable between the motor and the frame and the cabling earthing slot as shown in the figure.

• **Connection of cables to voltage regulator.**
Connect the regulator connector. Be careful with the routes of the radiator vent pipe and the gas pipes!

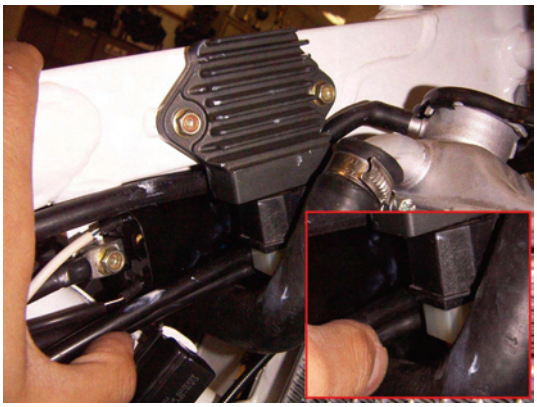

• **Connecting relay**
Connect the "DC" cable to the relay on the right side of the motorbike.

• **Connecting relay**
Connect indistinctively the "POW" and "FAN" cables to the relays on the left side of the motorbike.

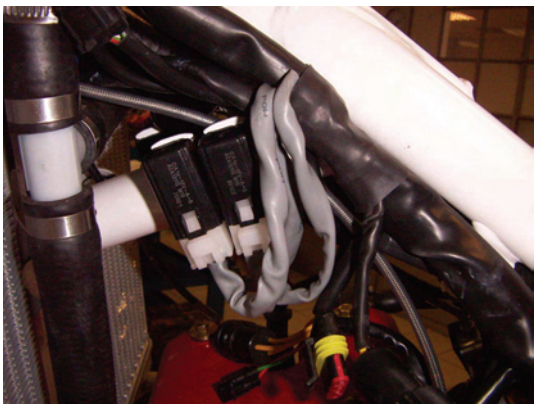

• **Connecting the electric fan**
Connect the electric fan connector as shown.

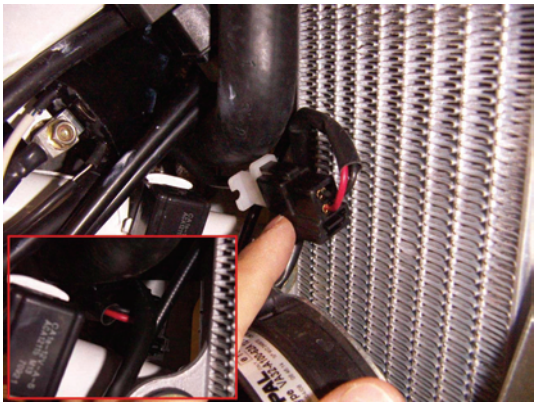

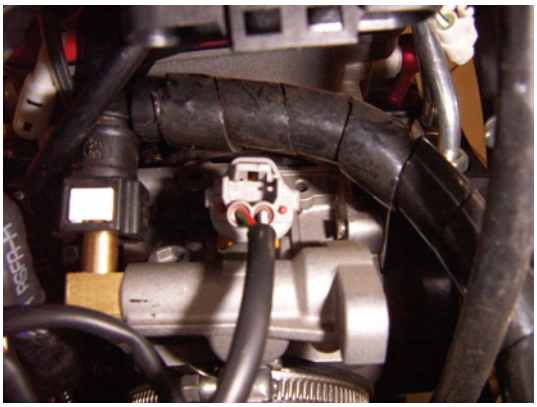

• **Connecting the injector**
Connect the injector connector as shown.

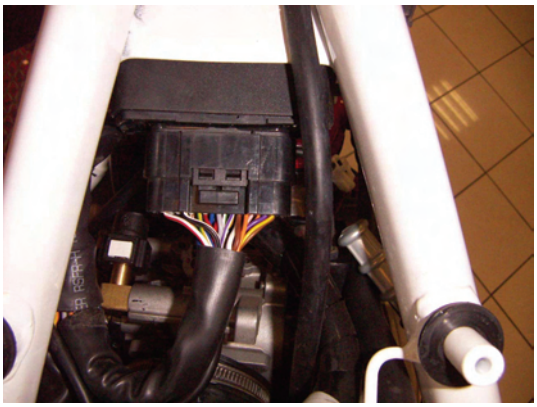

• **Connecting the central unit**
Connect the central unit connector as shown.

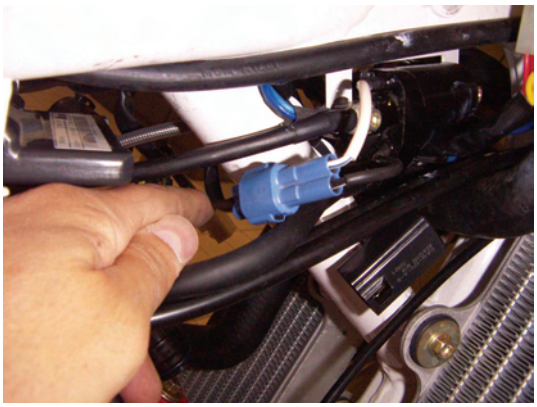

• **Ignition coil connection**
Connect the ignition coil connector as shown

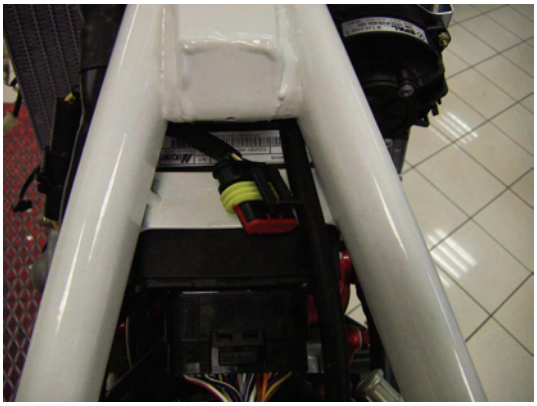

• **Positioning of the fuel pump connector**
Place the fuel pump connector as shown.

• **Connecting the MAQS connector**
Connect the MAQS connector as shown.

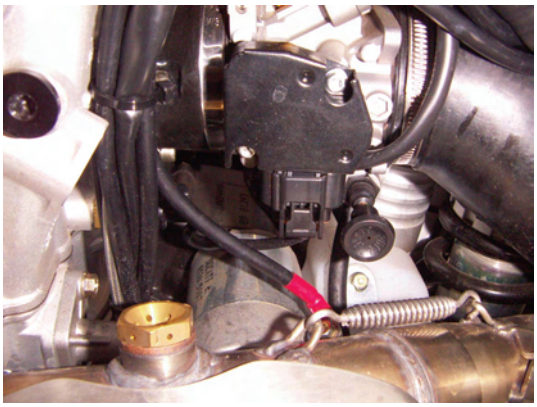

• **Connecting the engine water temperature connector**
Connect the engine water temperature connector as shown.

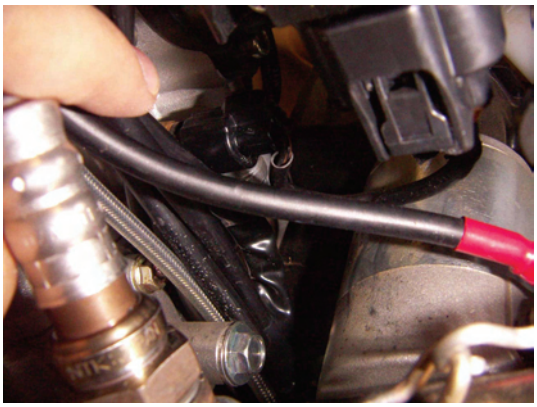

• **Posiotioning the lambda sensor**
Screw the lambda sensor as shown.

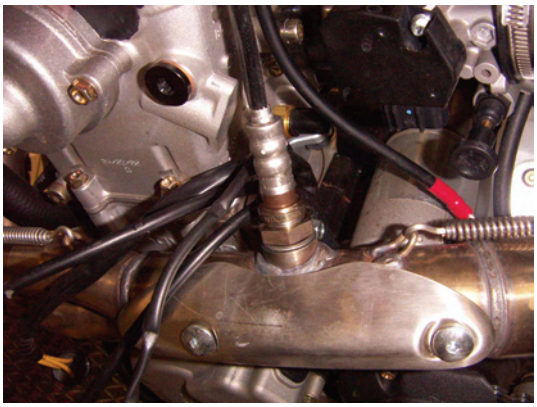

• **Connecting the lambda sensor connector**
Connect the lambda sensor connector as shown.

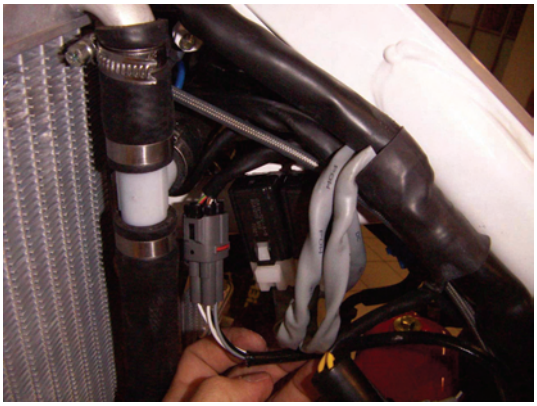

• **Connection of starter and speed sensor cables.**
Connection of starter and speed sensor cables.

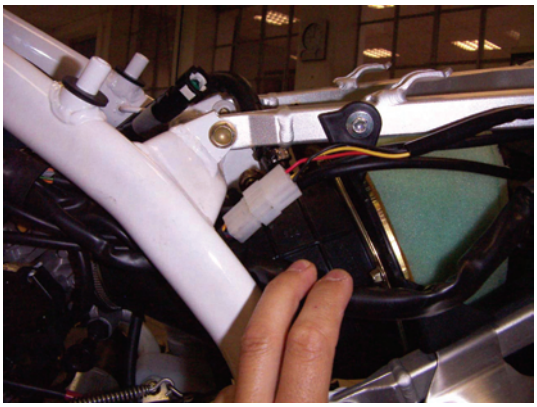

• **Threading of frame cables and back light connector.**
Thread the back of the cables as shown in the figure. Connect the back light connector.

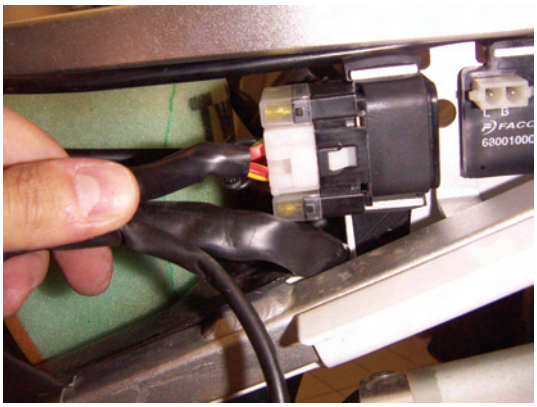

• **Connection of remote-control switch.**
Connect the connector to the remote-control switch as shown.

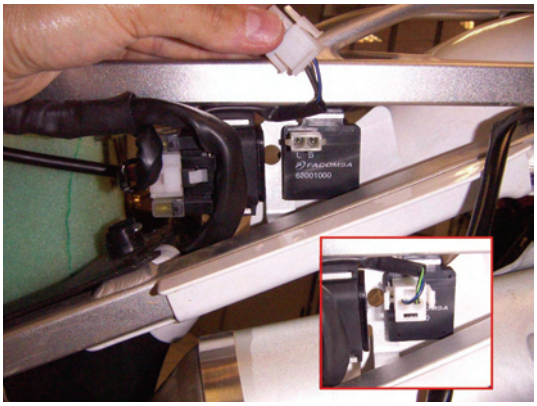

• **Connection of intermittent turn indicator.**
Connect the connector to the intermittent turn indicator as shown.

• **Threading of cables to filter box.**
Thread the cables as shown, fasten with the clip provided.

• **Fastening of clip to fuse box.**
Fit the clips provided to the three fuse boxes.

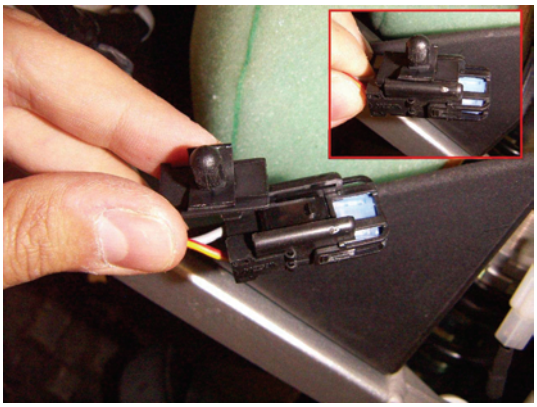

• **Fastening of clip to fuse box.**
Fit the three fuses in the pierced wall on the back fender.

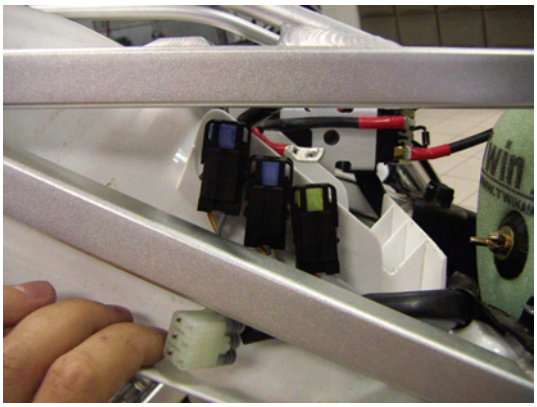

• **Connection of tilt sensor plug (TE only)**
Connect the plug as shown in the figure.

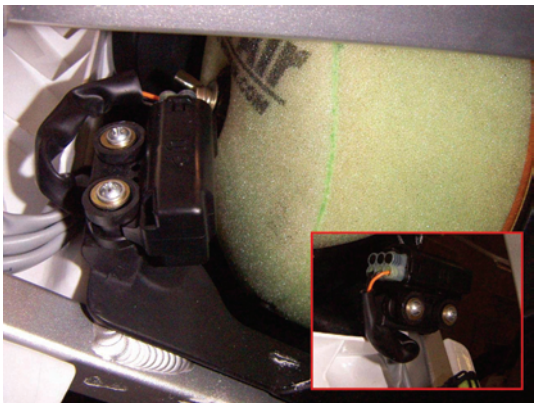

• **Connection of tilt sensor (SM only)**
Connect the drop sensor as shown in the figure.

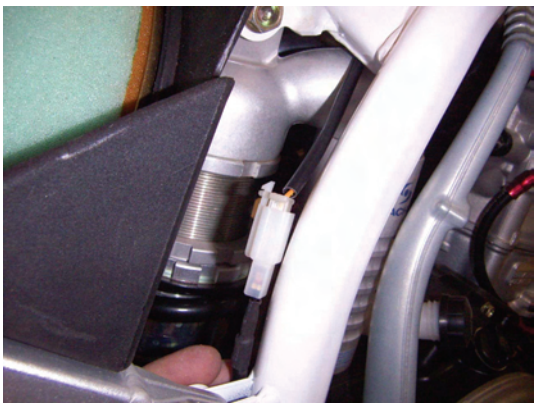

• **Connection of back stop.**
Connect the stop sensor as shown in the figure.

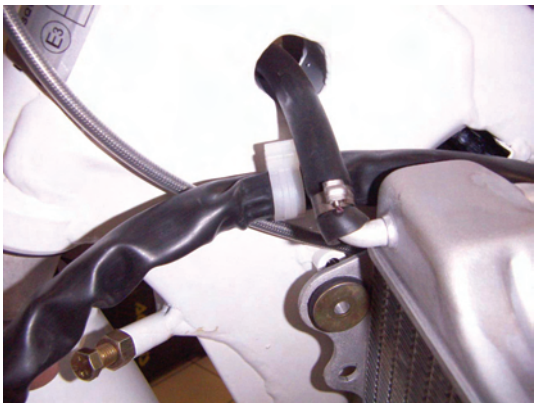

• **Threading of steering sleeve cables**
Secure the cables with the clip provided.

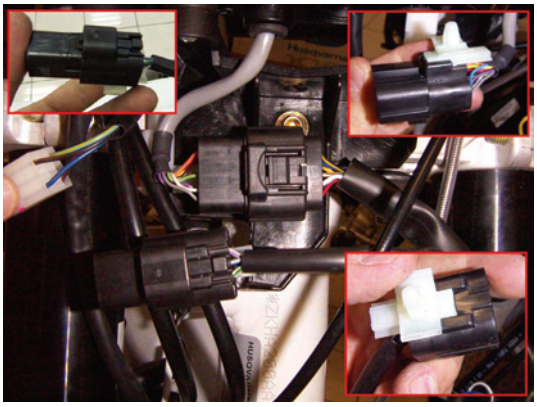

• **Fastening of instrument holder plate connectors**
Fasten the instrument and diagnostics connector using the fastening clips provided. Fit the plug into the diagnostics connector.

• **Double-map connector plug.**
Fit the plug into the double-map connector.

• **Clutch and left handle block connectors.**
Connect the left block and clutch sensor connectors.

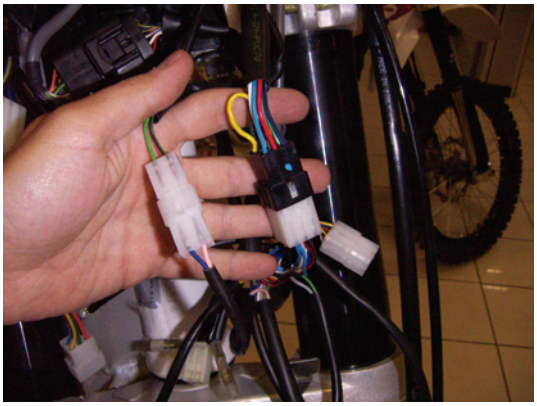

• **Front stop, speed sensor and right handle block connectors.**
Connect the right block, front stop and speed sensor connectors .

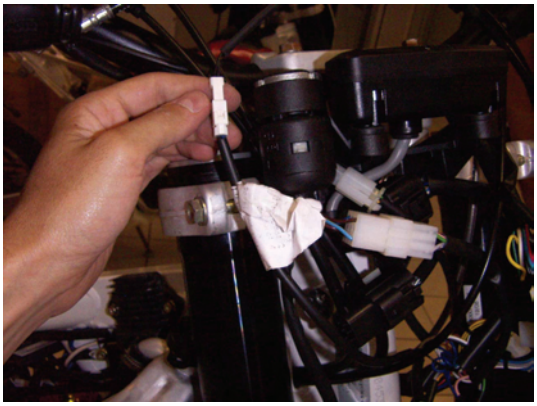

• **Horn connector**
Connect the horn as shown in the figure.

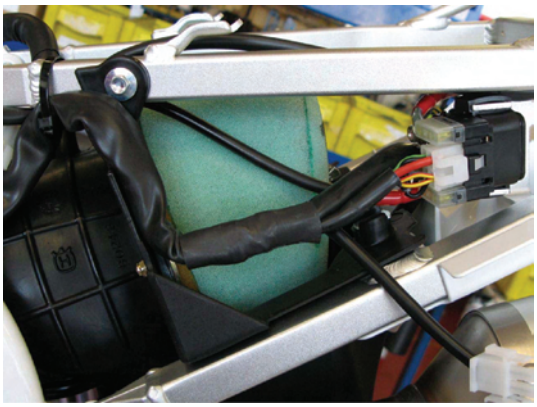

• **Fastening wiring**
Fasten the wire harness to the frame with a clamp as shown in the picture.

• **Fastening wiring**
Fasten the back stop cable to the frame with a strap as shown in the figure.

• **Fastening wiring**
Fasten the back stop cable to the frame with a strap as shown in the figure.

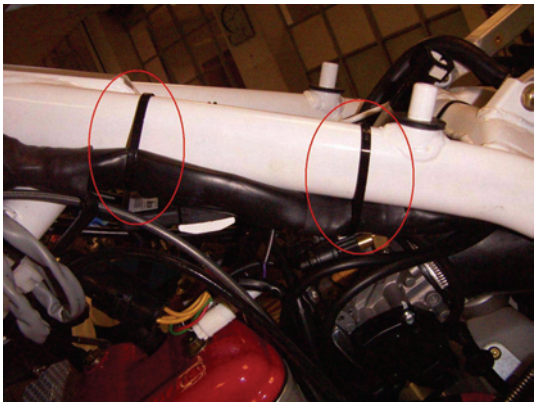

• **Fastening wiring**
Fasten the wire harness to the frame with two clamps as shown in the picture.

• **Fastening wiring**
Make sure the cable node is secured outside the frame.

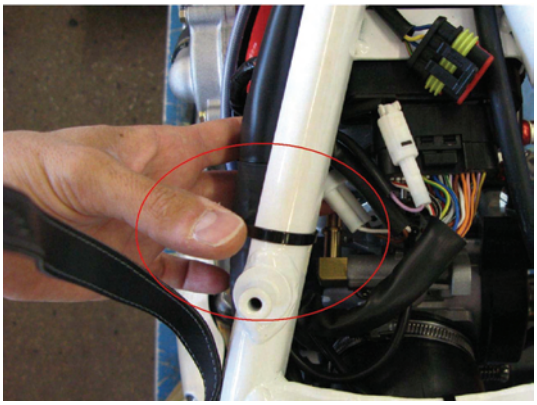

• **Fastening wiring**
Place the GPS and Pick-Up connectors as shown.

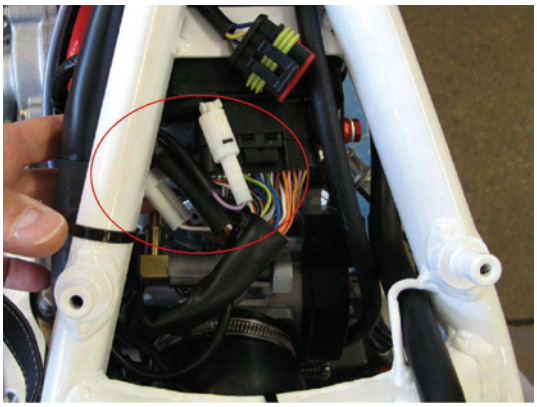

• **Fastening wiring**
Secure the generator connector as shown.

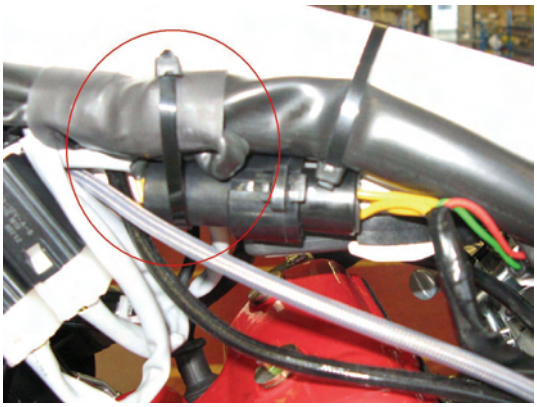

• **Fastening wiring**
Connect the start, speed sensor and lambda sensor cable bundle to the hydraulic clutch pipe.

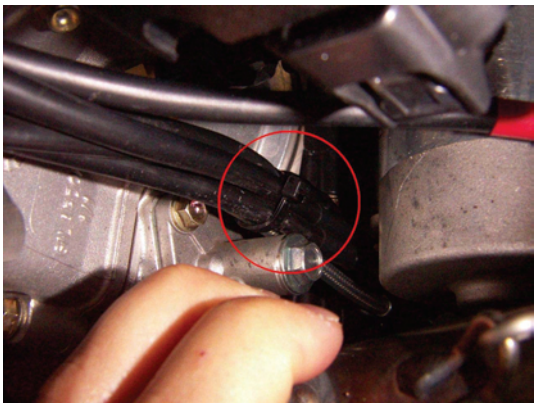

• **Fastening wiring**
Connect the start and speed sensor cable bundle to the hydraulic clutch pipe.

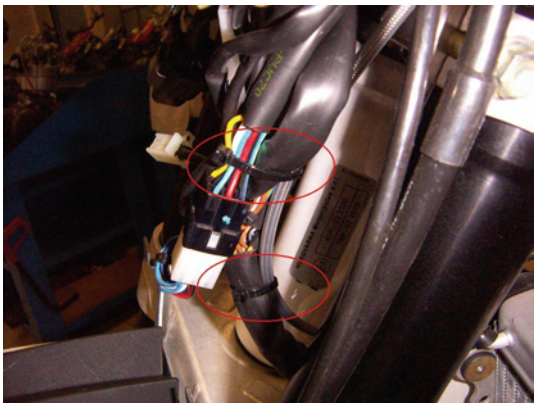

• **Fastening wiring**
Fasten the front wire harness with two clamps as shown.

• **Fastening wiring**
Fasten the front wire harness with two clamps as shown.

IMPORTANT RECOMMENDATION (pages M.62-M.63)

Premised that, before the motorcycle washing, it is necessary to protect opportunely from the water the following parts:
a) Rear opening of the muffler;
b) Clutch and brake levers, hand grips, handlebar commutators;
c) Air cleaner intake;
d) Fork head, wheel bearings;
e) Rear suspension links,
it is necessary ABSOLUTELY TO AVOID THAT HIGH PRESSURE JETS OF WATER OR AIR come to contact with THE ELECTRICAL PARTS (pages M.6-M.7) and any parts of the INJECTION SYSTEM, especially the electronic central unit (1) and the M.A.Q.S. unit (2).

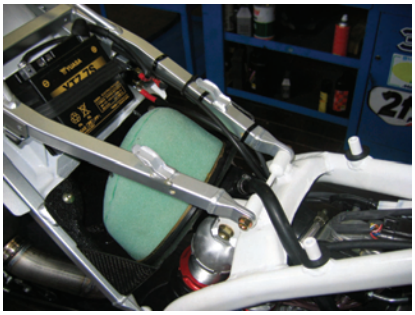

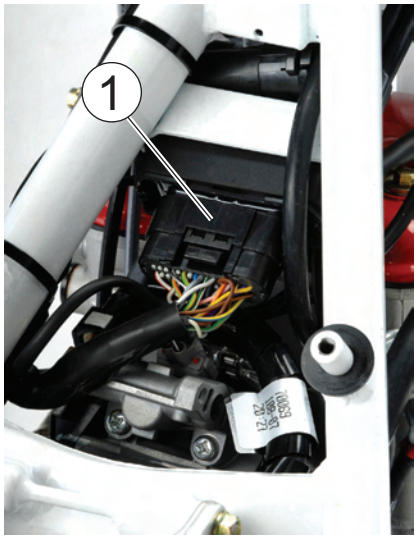

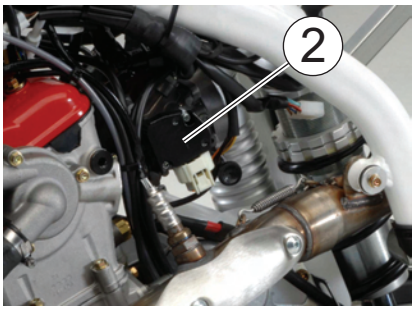

Section N

Checking the cooling fluid level N.3
Cooling system N.4
Engine cooling system overhauling N.5

Checking the cooling fluid level

Cooling fluid absorbs the heat from the thermic group (piston, cylinder, head) and conveys it to the exterior atmosphere through radiator. For a correct operation of the cooling system it is of utmost importance the periodical check of fluid level.

The lack of the heat exchange means (water) between thermic mass and radiant mass could cause overheating of the cylinder-piston assembly with consequent seizure and, the worst, damages to the crankshaft assembly.

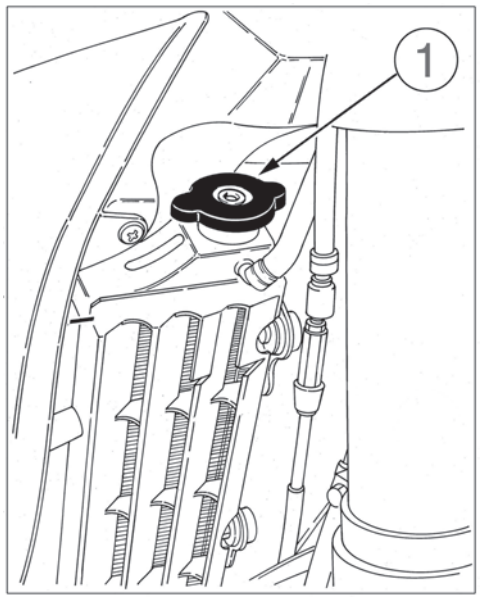

However if engine overheating is noticed, check that radiator is completely filled up. Check of radiator level must be performed with cold engine (see page D.32).
If for any reason you have to operate on a hot engine, take care to slowly discharge pressure.
The radiator cap (1) is provided of two unlocking positions, the first being for the previous pressure discharge.

Opening the circuit without taking care of above directions could cause scalds to the operator and other people around.
TE-SMR: Because the cooling fan (2) can be activated even when the start switch is in OFF position, always keep at a safe distance from the fan vanes.

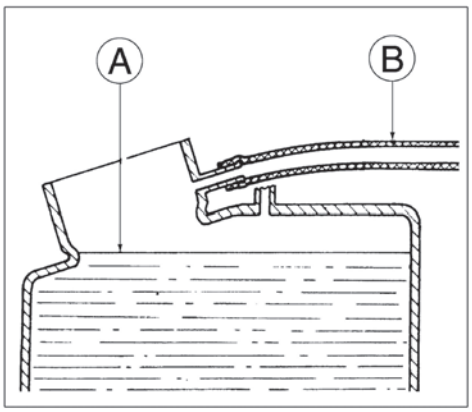

A. Cooling fluid level
B. Breather hose

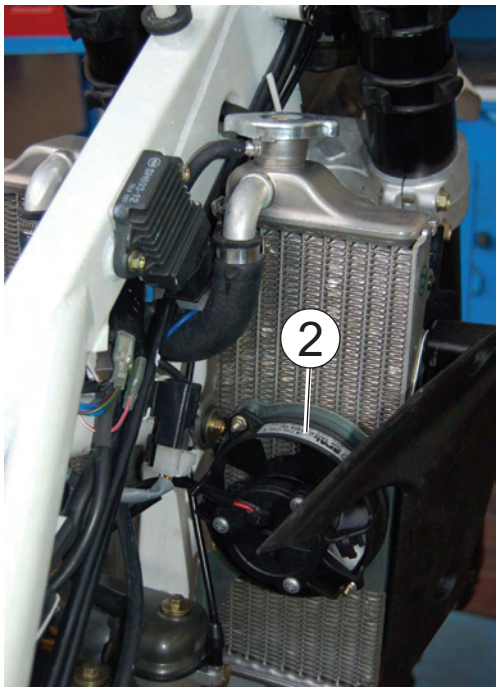

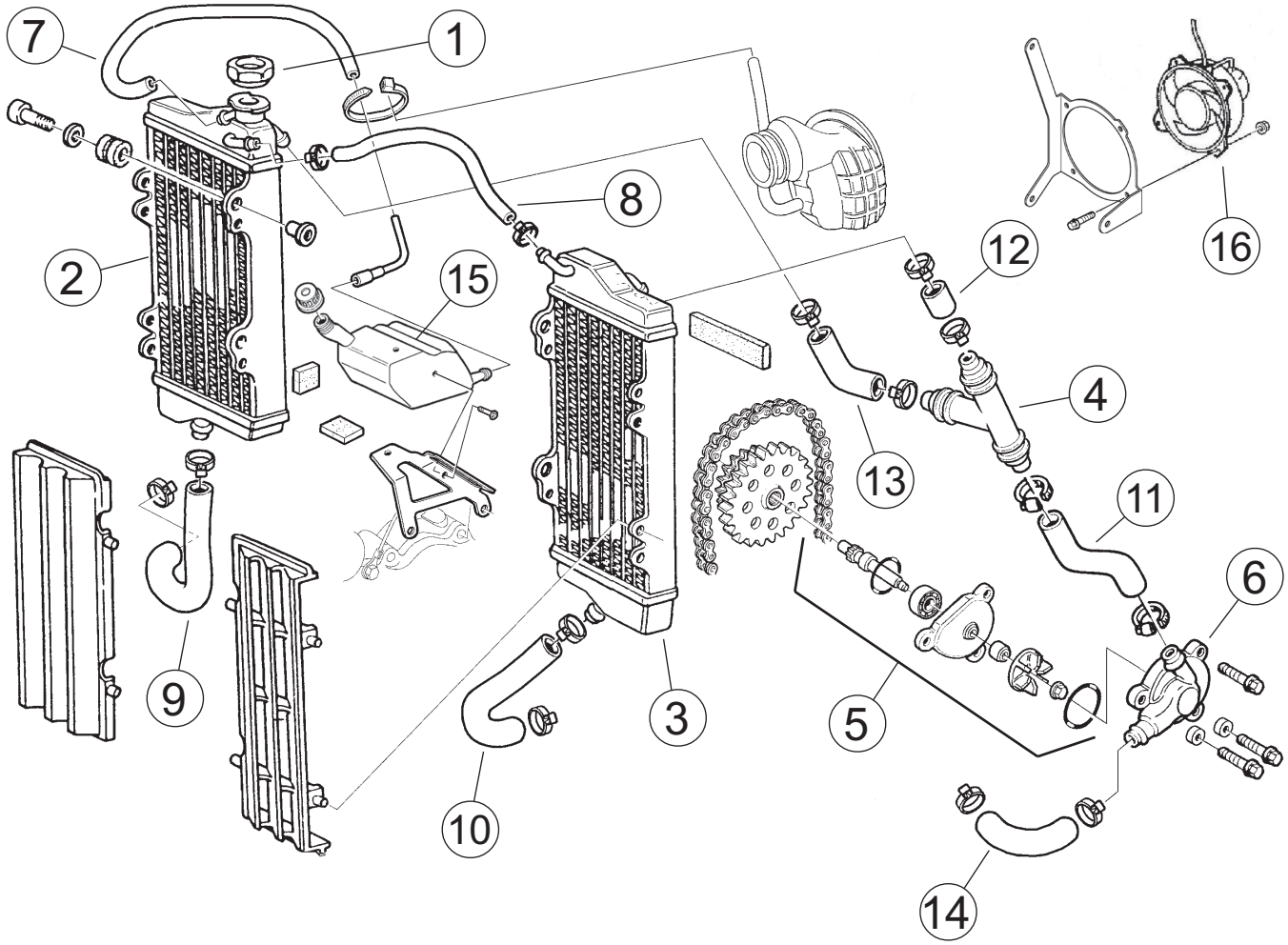

Cooling system

The cooling system is of the forced circulation type, with centrifugal pump located on the L.H. side of the cylinder head, and two cooolers with vertical flow.

1- Radiator cap
2- R. H. Radiator
3- L. H. Radiator
4- Union
5- Water pump
6- Water pump cover
7- Breather hose
8- Radiators hose
9- R.H. lower hose
10- L.H. lower hose
11- Water pump – Union hose
12- Union - L. H. Radiator hose
13- Union - R. H. Radiator hose
14- Water pump – Cylinder head hose
15- Expansion tank (TE- SMR)
16- Electric fan (TE- SMR)

Engine cooling system overhauling

Verifying too high temperatures of cooling fluid, check the radiant mass. Whether on fins are noticed obstructions to the air flux as leaves, bugs, mud etc., carry out removal of these obstructions taking care not to damage radiator. If distortions are noticed, it is advisable to straighten them so restoring the air passage. The radiant mass has not to be clogged or damaged for more than 20% of its surface. If the damaged surface is over this limit, it shall be advisable to replace radiator. Periodically check the connecting hoses (see “Periodical maintenance card” page B.8): this will avoid coolant leakages and consequent engine seizure. If hoses show cracks, swelling or hardenings due to sheats desiccation, their replacement shall be advisable. Check the correct tightening of the clamps.

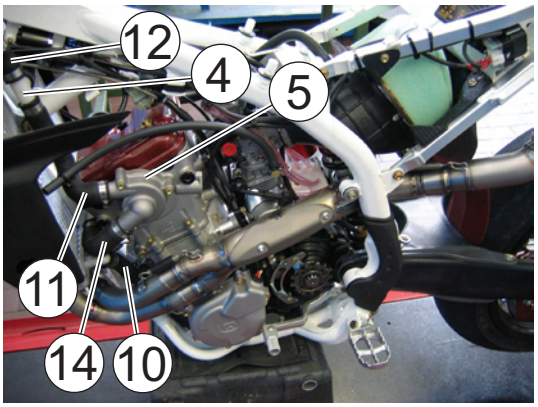

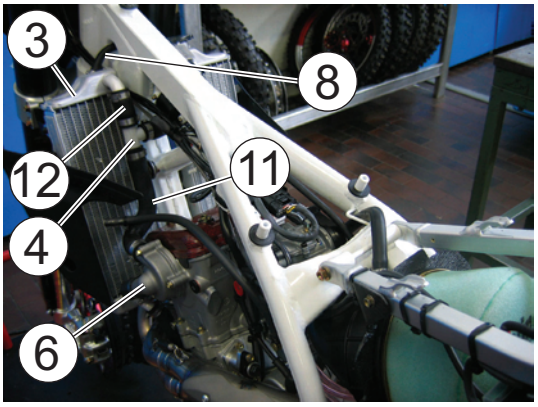

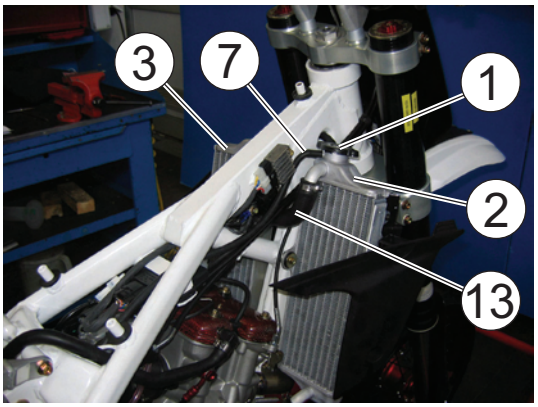

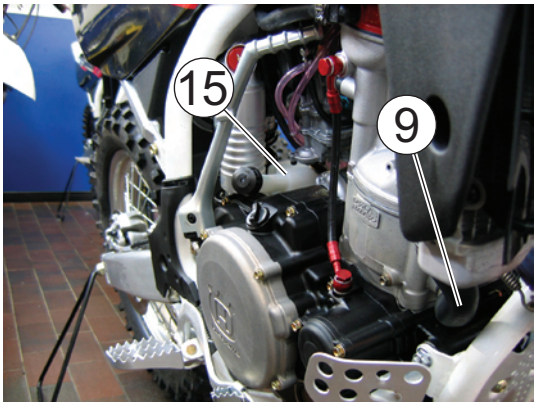

“KIT” ASSEMBLING INSTRUCTIONS

Side engine guards (SMR excluded)
central engine guard O.3
Passenger footrest Kit (SMR) O.4
Carburetor KEIHIN 37 kit (TXC 250) and
KEIHIN 41 kit (TC-TXC 450-510) O.7
Hand guards kit (TE) O.8
Blinkers Kit (SMR) O.9
Blinkers Kit (TE) O.11
Hook Kit for race starting phase (TC-TXC) O.14
Kick starter kit (SMR) O.16
Assembling instructions for full power version
on TE-SMR models O.22

“KIT” ASSEMBLING INSTRUCTIONS

1- 8000 H0188 (TE, TC, TXC)
Side engine guards (page O.3)

2- 8000 B0157
Central engine guard (page O.3)

3- 8000 B0152 (SMR) (*)
Passenger footrest Kit (page O.4)

4- 8000 A4295 (TXC 250)
Carburetor KEIHIN 37 kit (page O.7)
4- 8000 A4296 (TC-TXC 450-510)
Carburetor KEIHIN 37 kit (page O.7)

5- 80A0 A6211 (TE)
Hand guards kit (page O.8)

6- 8000 B0150 (SMR) (*)
Blinkers Kit (page O.9)

6- 8000 H0804 (TE) (*)
Blinkers Kit (page O.11)

7- 8000 B1530 (TC, TXC 250-450-510; SMR 450-R)
Hook Kit for race starting phase (page O.14)

8- 8000 B0591 (SMR)
Kick starter kit (page O.16)

9- (TE, SMR)
Assembling instructions for full power version on TE-SMR models (page. O.22)

***: Not for USA/CDN**

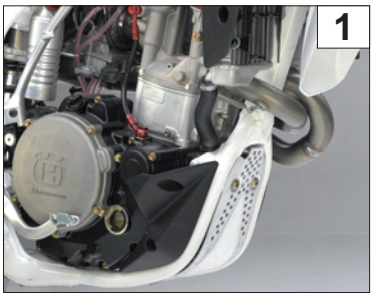

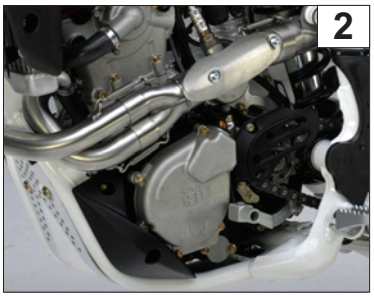

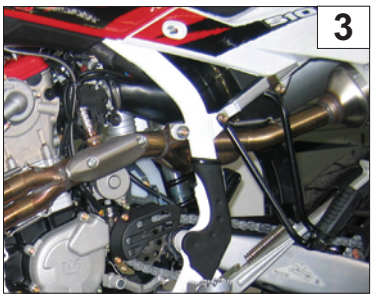

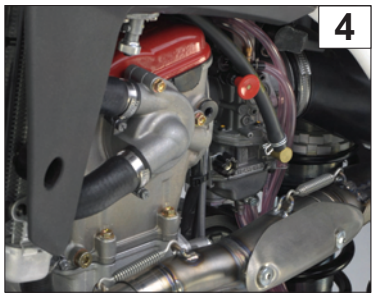

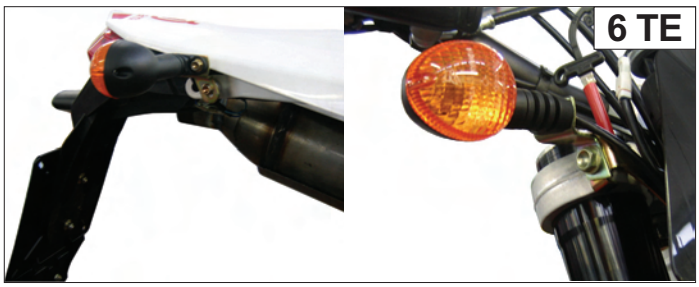

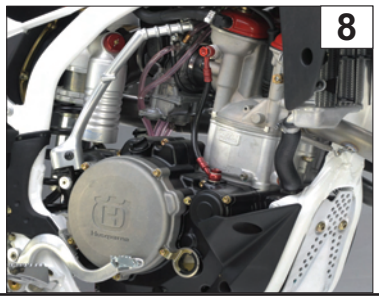

1- Side engine guards (SMR excluded) and central engine guard.

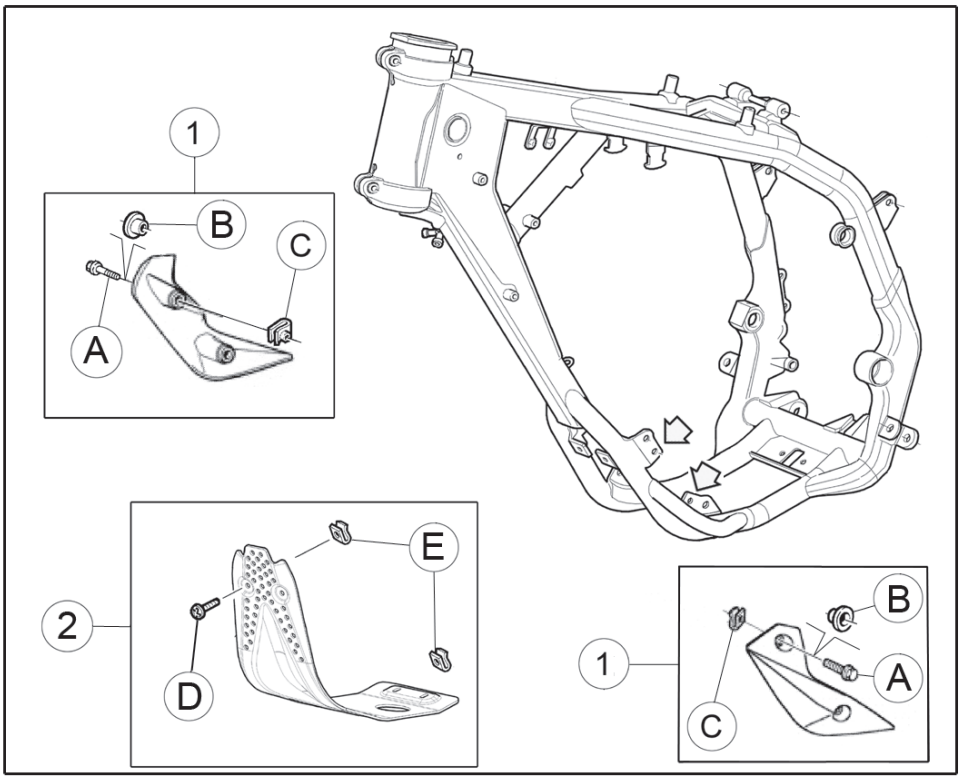

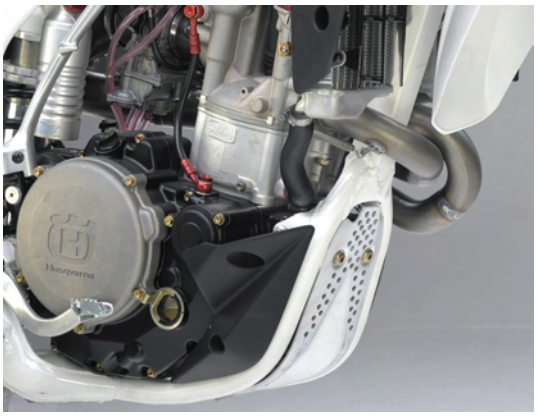

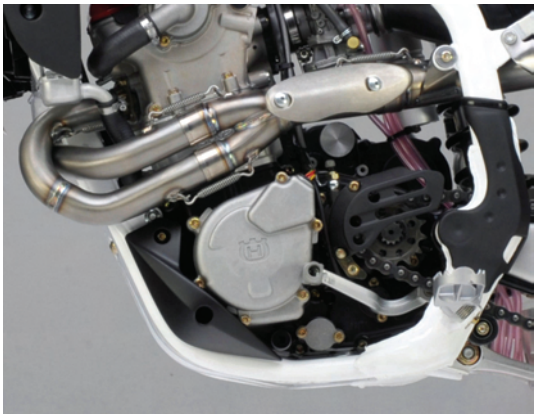

1, 2- Side engine guards (SMR excluded)
3- Central engine guard
A- Screw M6x25 mm (no. 4 pieces)
B- Bushing Ø6,2xØ8xØ12x9 mm (no. 4 pieces)
C- Nut M6 (no. 4 pieces)
D- Screw M6x15 mm (no. 4 pieces)
E- Nut M6 (no. 4 pieces)
Assemble as shown in the figure.

3- Passenger footrest (SMR).

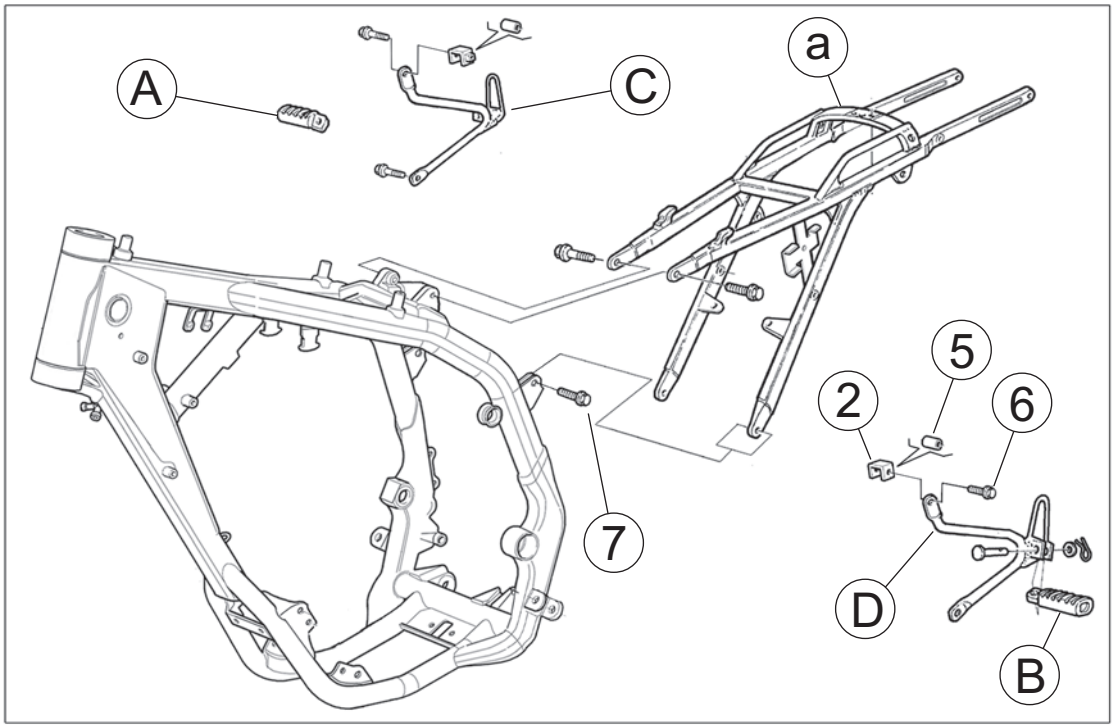

To always have the rear frame (a) fastened in two points, assemble the footrests first on to one side of the motorcycle then on the other one.

The description refers to the assembly of the left footrest (7), the assembly of the right footrest (8) is symmetrical.

Proceed as follow:
- Preliminarily mount the foot-rests (A) and (B) on the relevant supports (C) and (D);
- Remove the saddle and side panel as shown on page E.15-E.16;

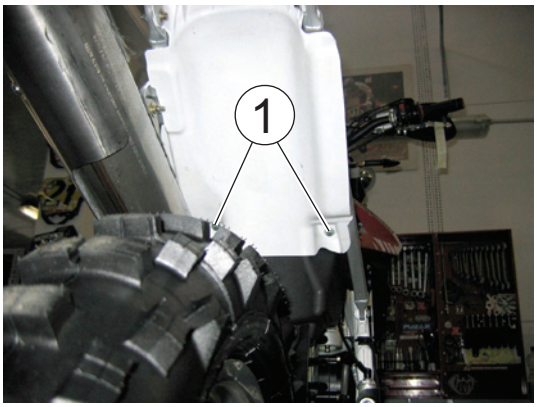

- From both sides, remove the fastening screws of the air filter box (1);

- Insert the plate (2) on the back frame;

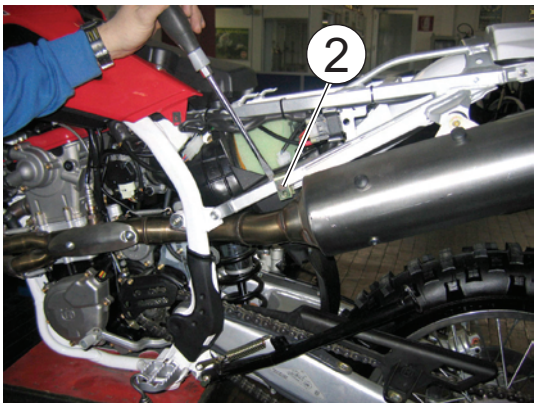

- Remove the frame lower screw (7);

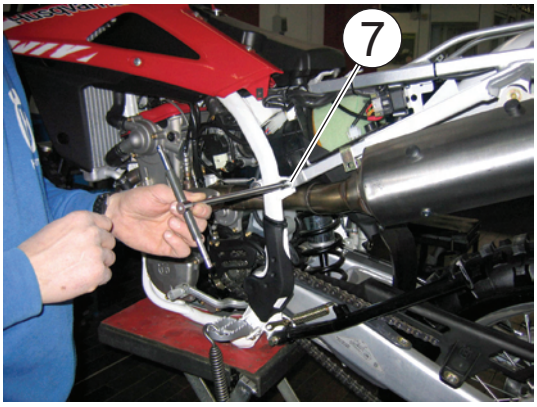

- Provisionally, fasten the foot-rest support in the front side by means of the M8x25 mm (4) screw supplied with the Kit (do not tighten fully);

- Insert the spacer (5) into the plate and fasten the rear by means of the M8x40 mm (6) screw also supplied with the Kit;

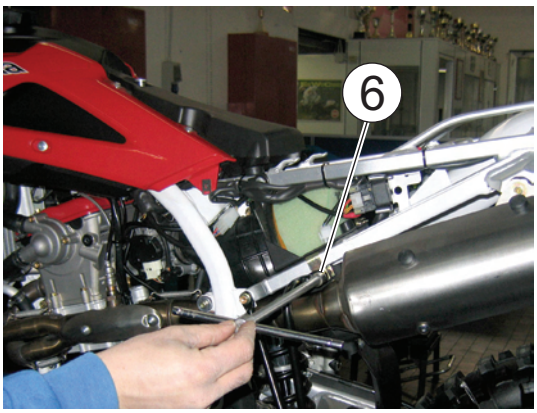

6- Turn signals KIT (TE)

FRONT TURN SIGNALS
Remove the upper fastening screw of the the headlamp carrier to the instrument panuel support (A);
- push forward the headlamp carrier (B) and pull it towards the high (C) in order to uncouple from the two lower supports.
- remove the headlamp carrier.

Assemble the turn signal (1) on the plate (5) tightening it with the nut (10).
Remove the front fork steering head fastening screws (D) and assemble the plate complete with turn signal using the same screws (D) and the spacer (7) (R.H. side: remember to assemble the horn E between the turn signal plate and the spacer on the front fork steering head). Connect the turn signals to the main wiring harness (see the wiring diagram on page O.13). The description refers to the assembly of the left turn signal (1), the assembly of the right turn signal is symmetrical.

1- L.H. front turn signal (no. 1 piece)
2- R.H. front turn signal (no. 1 piece)
3- L.H. rear turn signal (no. 1 piece)
4- R.H. rear turn signal (no. 1 piece)
5- L. H. front plate (no.1 piece)
6- R. H. front plate (no.1 piece)
7- Front spacer ø8,5xø16x3 mm (no. 2 pieces)
8- Screw M6x16 mm (no. 2 pieces)
9- Screw M6x20 mm (no. 2 pieces)
10- Nut M6 (no. 4 pieces)
11- Bushing ø7xø9x4,8 mm (no. 2 pieces)
12- Turn signal flasher (no.1 piece)

REAR TURN SIGNALS
Remove the seat and the L.H. side panel as shown on page E.15-E16.
Assemble the turn signal flasher (12) on the metal plate (F) near the solenoid starter (G). Assemble the turn signal (3) or (4) on the hole of the frame and tighten the nut (10).
Remove the screws (a), the rear tail light then connect the turn signals to the main wiring harness (see the wiring diagram on page O.13). Reassemble the rear tail light and the grommet (b).
The description refers to the assembly of the left turn signal (3), the assembly of the right turn signal is symmetrical

After completing the assembly operation, assemble back the previously removed components.

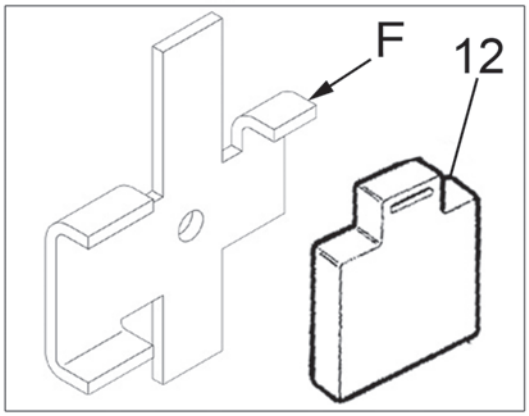

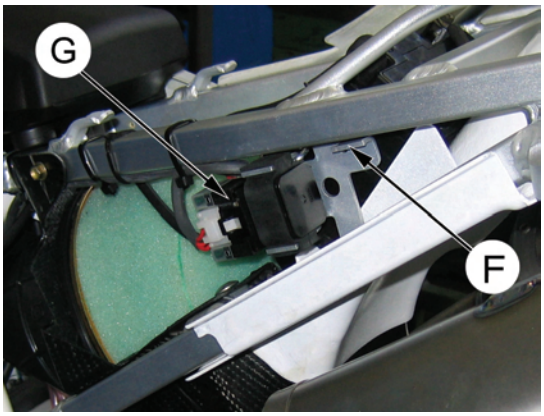

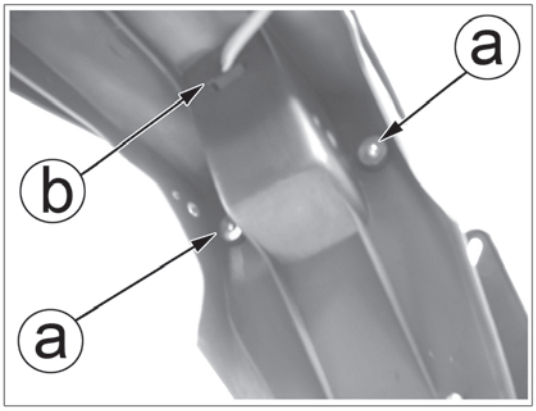

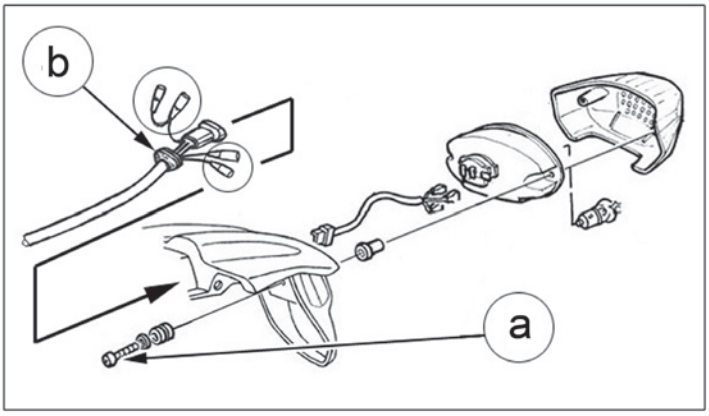

TE-SMR

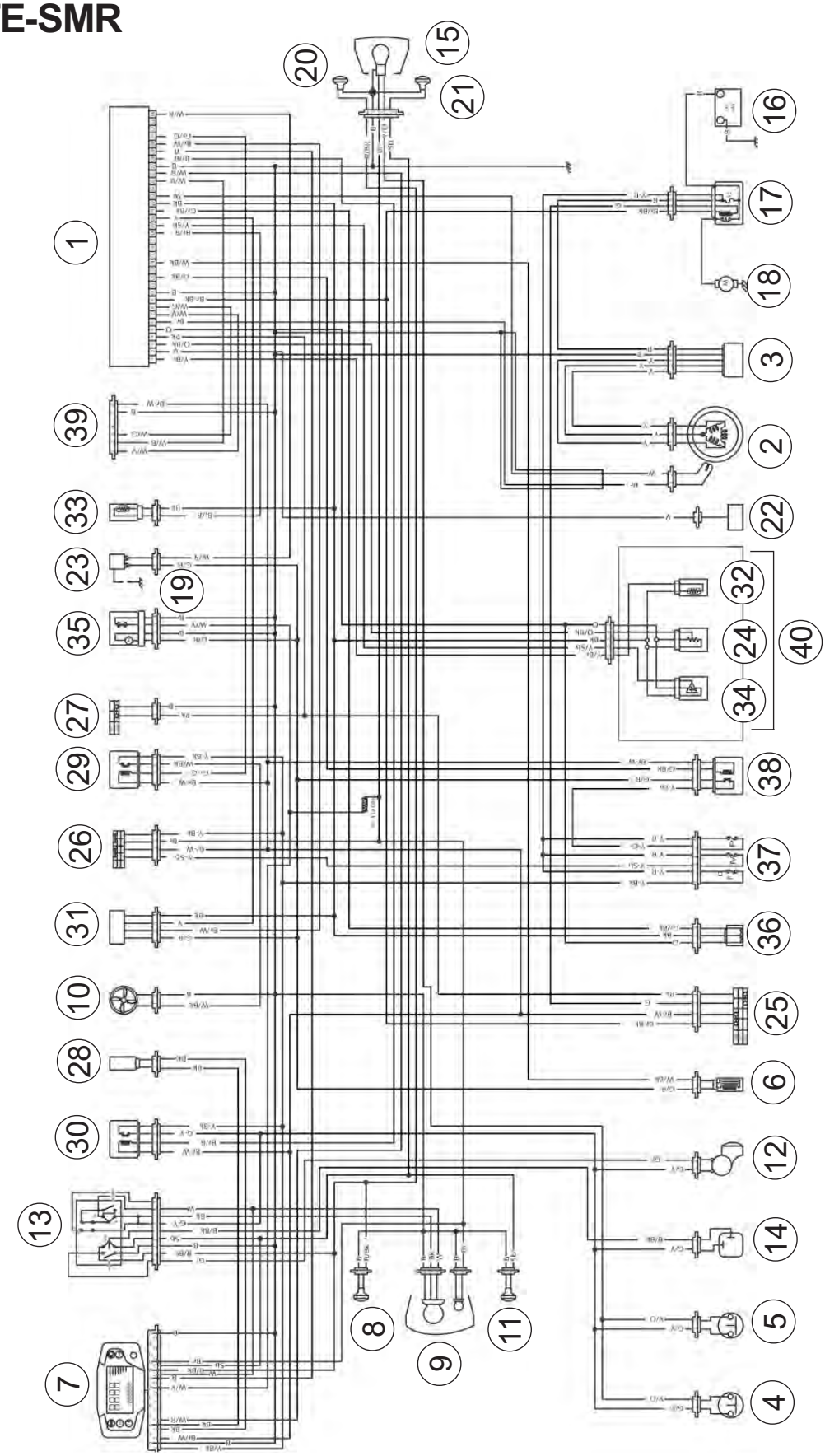

KEY TO ELECTRIC DIAGRAM

8. R.H. front turn indicator (nr. 2 page. O.9)
11. L.H. front turn indicator (nr. 1 page. O.9)
11. Turn indicators flasher (nr. 8 page. O.10)
20. R.H. rear turn indicator (nr. 1 page. O.9)
21. L.H. rear turn indicator (nr. 2 page. O.9)
B. Blue
R/Bk. Red/Black
Sb. Sky Blue

7- The Kit Hook for race starting phase (TC, TXC: Code 8000 B1530) consists of:

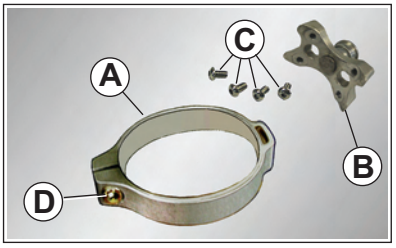

Part. No.	Description	Code	Q.ty
A	Ring	(8000A6135)	1
B	Hook	(8000B1529)	1
C	Screw	(80B047053)	4
D	Screw	(60N407330)	1

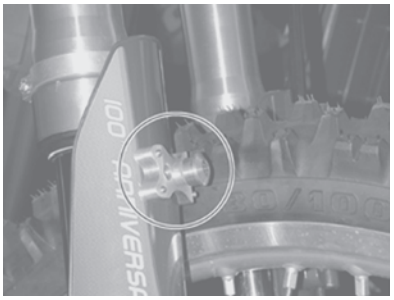

“KIT” ASSEMBLING INSTRUCTIONS

Preliminary operations
Set a stand or a block under the engine and see that the front wheel is lifted from the ground.
Loosen the four screws (1 fig.1) fixing the front wheel axle.
Hold the head (3 fig.2) of the wheel axle in place, unscrew the bolt (2 fig. 1) on the opposite side; strike the wheel axle with a nylon drift, then draw the wheel axle out and lay down the wheel with brake disc facing up.
Loosen the three screws (4 fig.2) fixing the R.H.slider protection and remove it.

NOTE
Do not operate the front brake lever when the wheel has been removed; this causes the caliper pistons to move outwards.

Make a hole in the middle of the slider guard at the distance X=80mm from top using a drill Ø 12 mm; follow the scheme in fig. 5 (A°=90°). Deburr the hole.
Insert the hook “B” on slider guard as indicated in fig. 6 and holding the hook in place, mark the positions of the four screw holes using a point.
Remove the hook and make the four holes with a drill Ø 4,5 mm perpendicularly to the surface of the slider guard.
Fix the hook on the slider protection with the four screws “C”.

Loosen the four screws (5) fastening the R.H. front fork leg and withdraw this from the steering plates.
Remove the clamp (6) from the front fork leg.
Insert the clamp “A” onto the fork leg and slide it until stop; tighten the screw relative “D”.
Reinsert the R.H.fork leg onto the steering plates restoring the distance “E” (see left side) and tighten the four fixing screws.
Reassemble the front wheel operating in the reverse order of dismantling.
Reassemble the slider guard on R.H.fork leg and fix this with the three screws (4 fig.15).

Lower the fork so that the ring “A” is at a lower point with respect to the hook “B”, hence fully push the hook’s pin (fig.17) and slovly release the fork until the pin’s head slots into the ring’s groove as illustrated in the scheme of fig.18.
Warning
The kit is intended only for competition use.

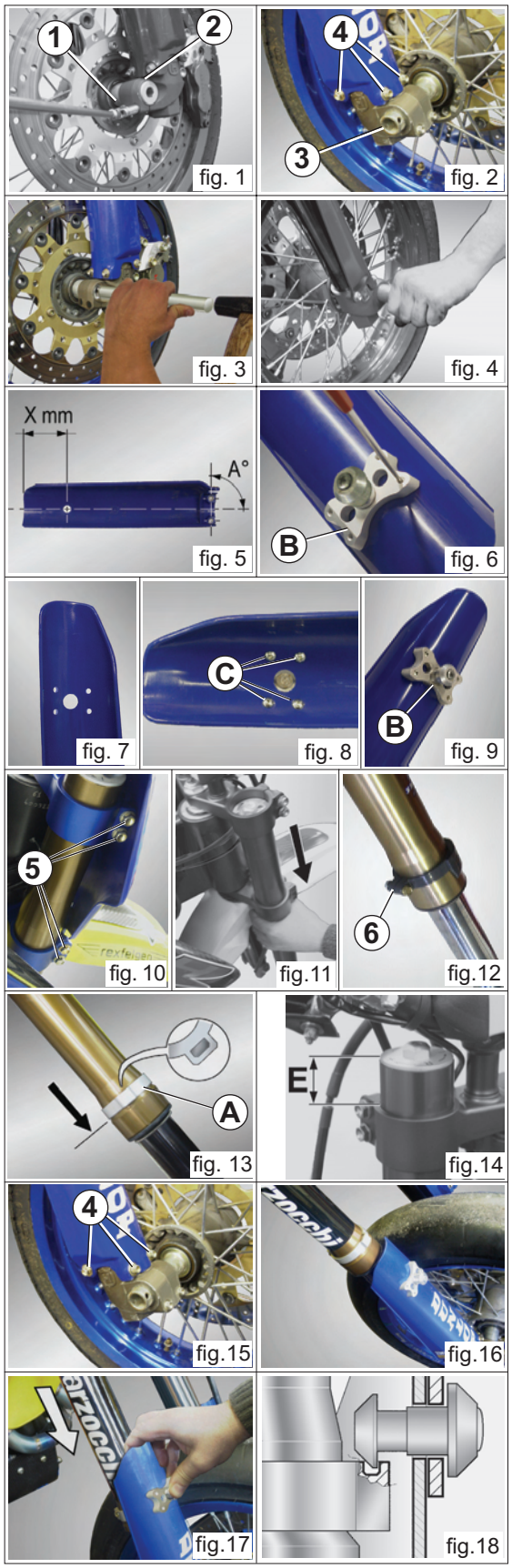

9- Kick starter kit (34, for SMR)

To effect the above mentioned operations, it is not necessary to remove the engine from the motorcycle.

6- Plate(1)
10- Washer(2)
14- Spring(1)
15- Sliding gear(1)
35- Gear Z=32
37- Spring (1)
38- Screw M6x14 mm (2)
39- Spacer (1)
40- Idling gear Z=30 (1)
41- Thrust washer 0,5 mm (1)
42- Kick start pedal (1)
43- Pedal hub (1)
44- Spring (1)
45- O Ring (1)
46- Screw M6x28 mm(1)
47- Ball 7/32" (1)
48- Screw M6x20 mm(1)
49- Washer (1)
50- Seal ring ø16x25x4 mm (1)
51- Starter crank shaft (1)
52- Shim washer 0,6 mm (1)

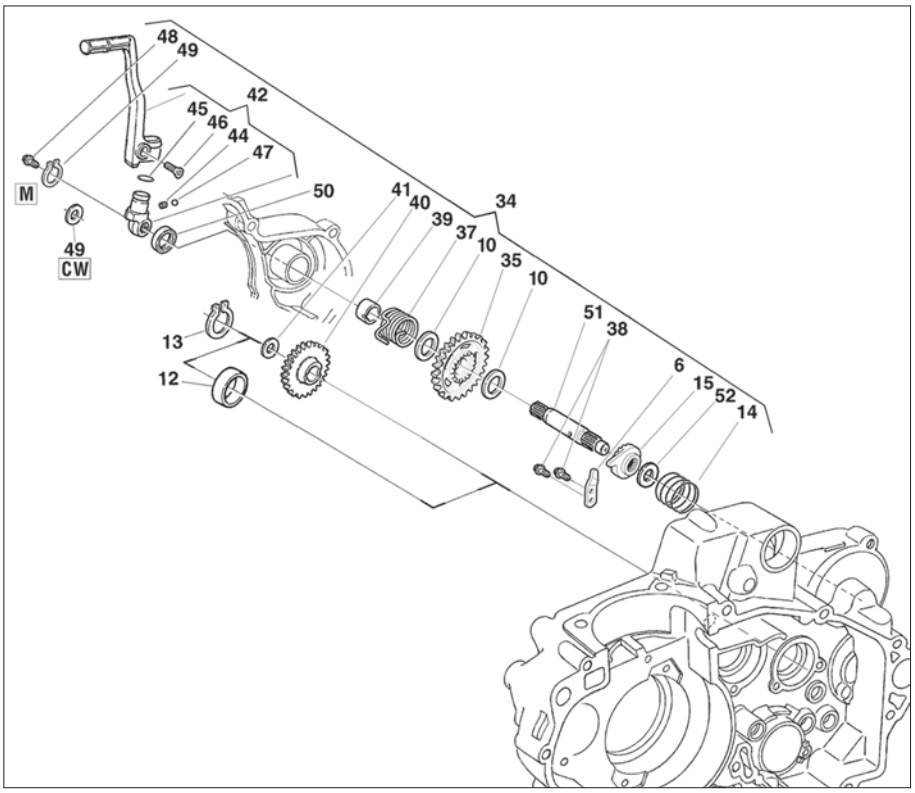

PRELIMINARY OPERATIONS : disconnect the battery from the electrical system (page E.15), drain the engine oil (page D.21) and reassemble the engine oil drain plug (8 mm allen wrench; tighten at 25 Nm-18.5 ft/lb). Using a 6 mm allen wrench, remove the rear brake control pedal bolt.

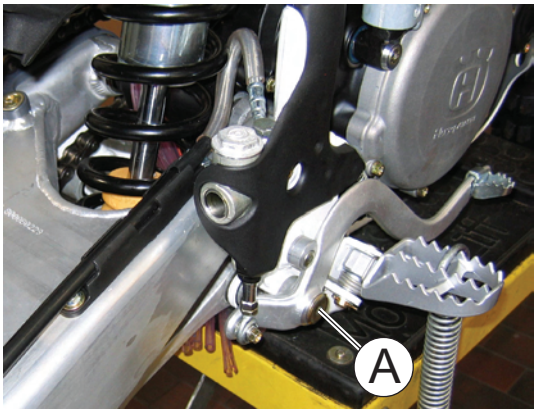

Remove oil line bolt on R.H. crankcase cover (13 mm wrench). Remove 12 cover fastening screws (8 mm wrench), cover and gasket. Use a punch to remove the brass plug cap (A) and install oil seal (50).

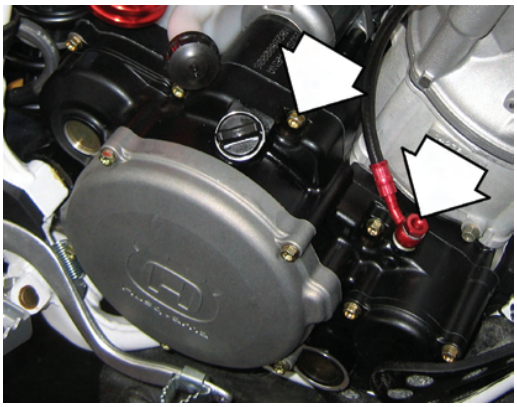

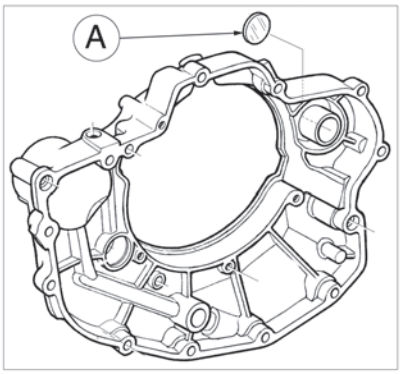

Remove the six screws (12) that fasten the springs (11) (5 mm wrench, whilst following a cross-over pattern and in steps). Remove the pressure plate (10) with the bearing and the clutch control cap (9). Remove clutch discs (8).

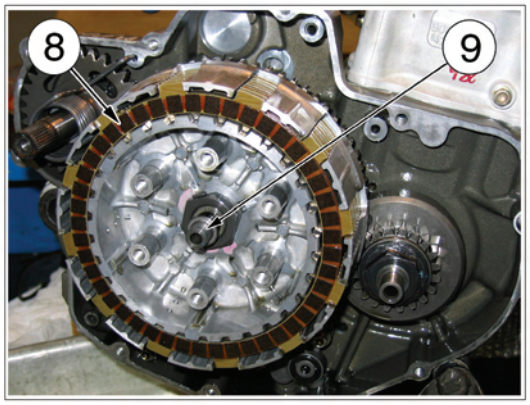

Bend back tabs of the hub washer (6) and holding the clutch hub nut (27 mm wrench), remove the nut (7) using the clutch disassembly tool (A) (code no. 8000 79015). Remove the washer (6), the clutch hub (5), the grooved washer (4) and the clutch housing (3).

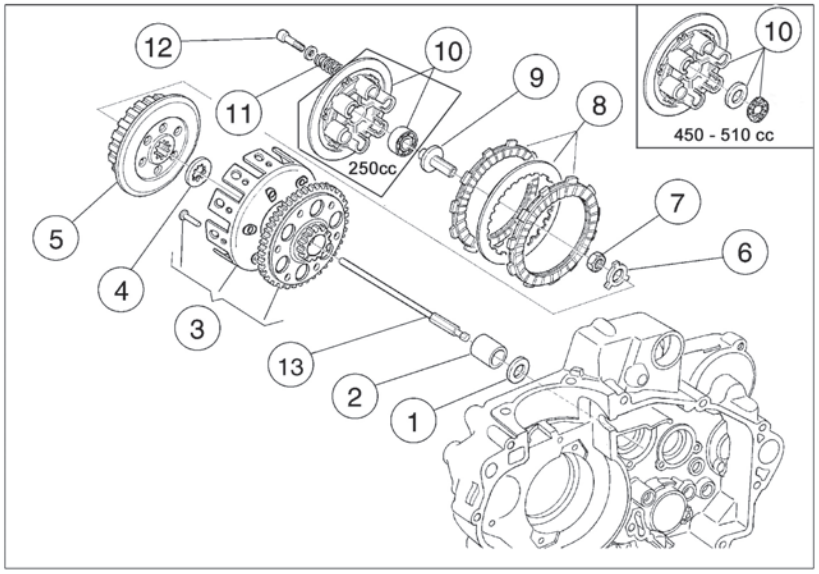

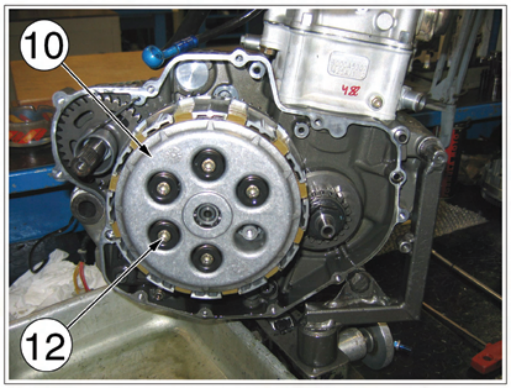

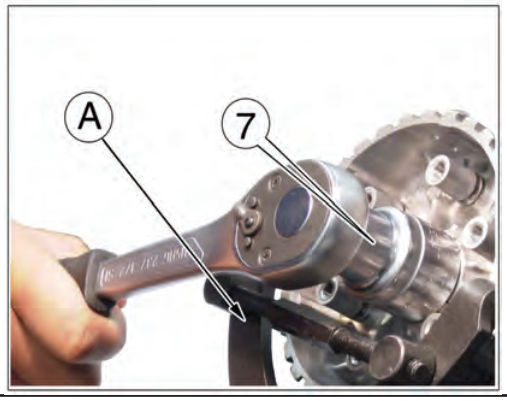

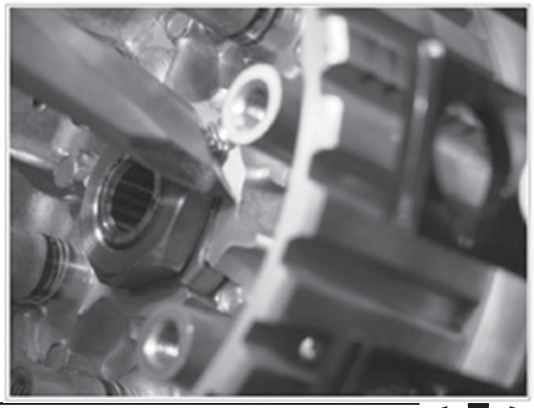

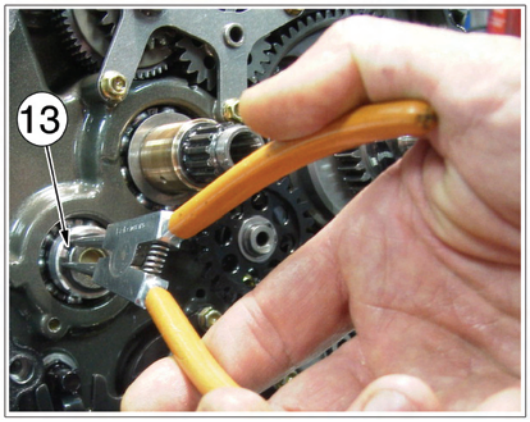

Remove the circlip (13), the spacer (12) then fasten the plate (6) in the holes (A) on the R.H. crankcase (C) using the two screws (38) M6x14 (+LOCTITE 243).

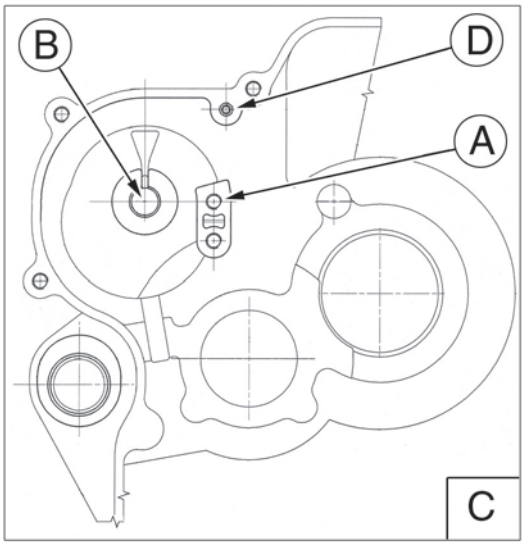

Assemble the shaft assy. (E) in the seat (B) then place the hook return spring (37) in the crankcase hole (D).

Assemble idling gear (40), washer (41) and circlip (13).

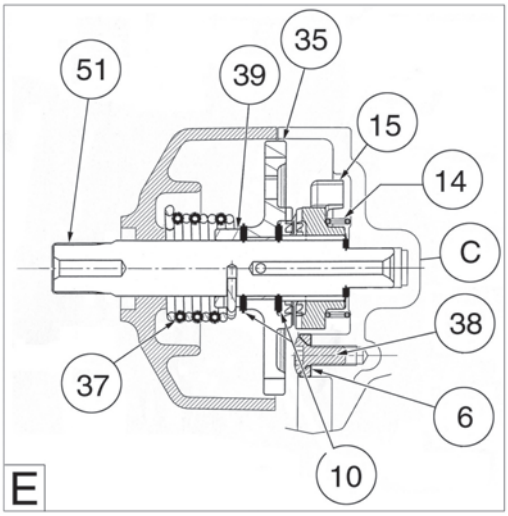

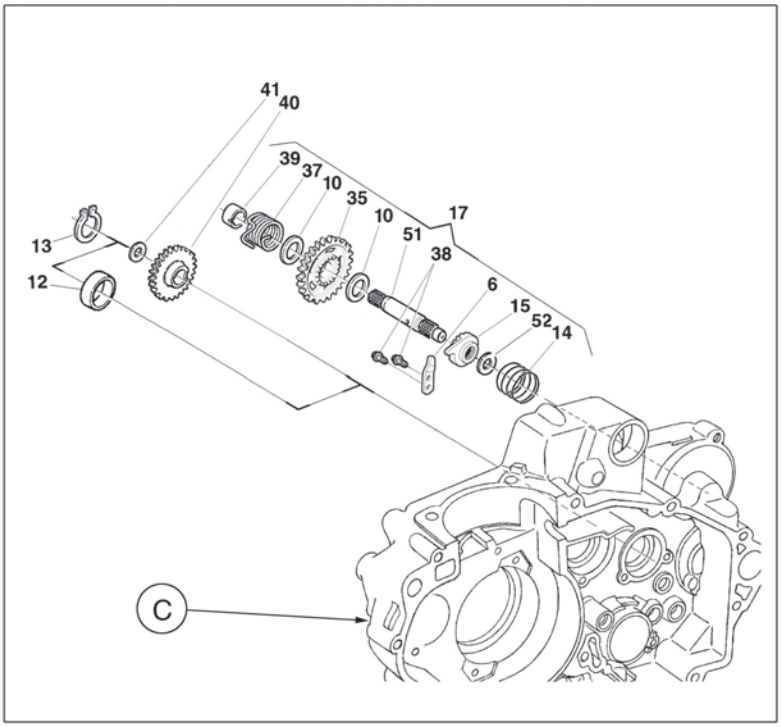

Reassemble: clutch disc housing (3), grooved washer (4), hub (5), lock washer (6) and fastening nut (7) (27 mm socket and tool "A" code no. 8000 79015; tighten at 75 Nm-7,5 kgm-55 ft/lb). Remember to bend locking tab over nut when tight.

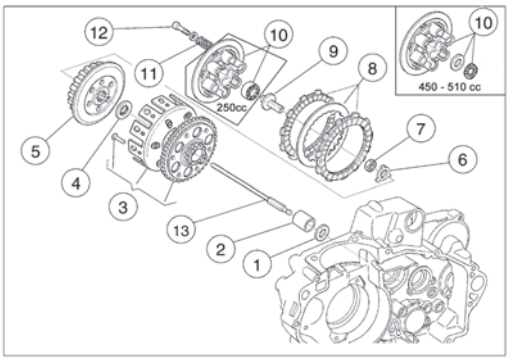

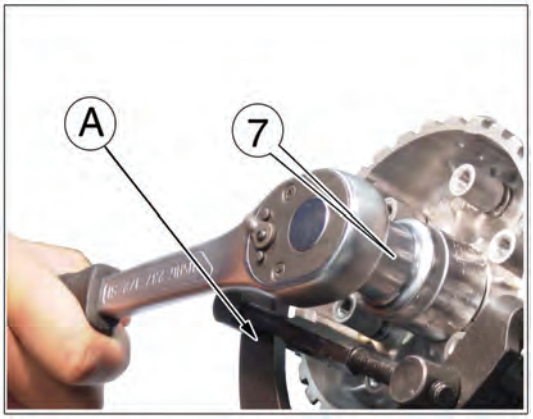

Reassemble clutch discs (8), clutch control cap (9), pressure plate (10) and springs (11).

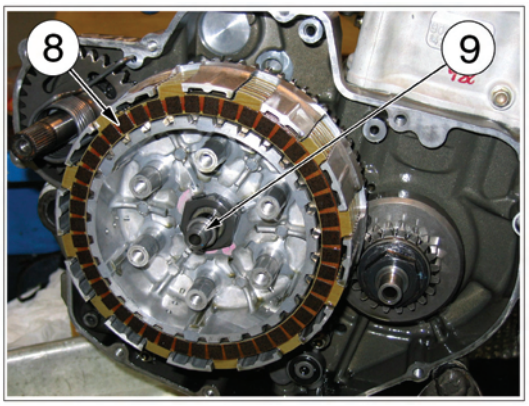

Tight the clutch springs screws (12) whilst following a cross-over pattern and in steps (5 mm allen wrench: 8 Nm-0,8 Kgm- 5.8 ft/lb).

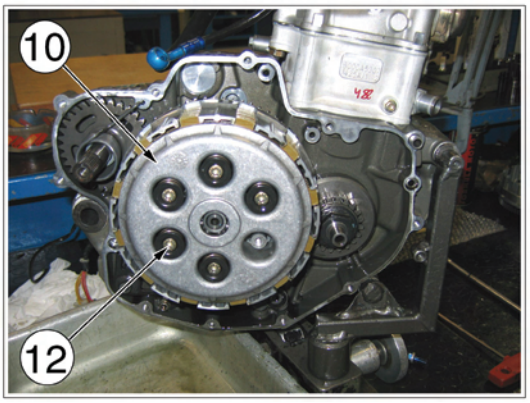

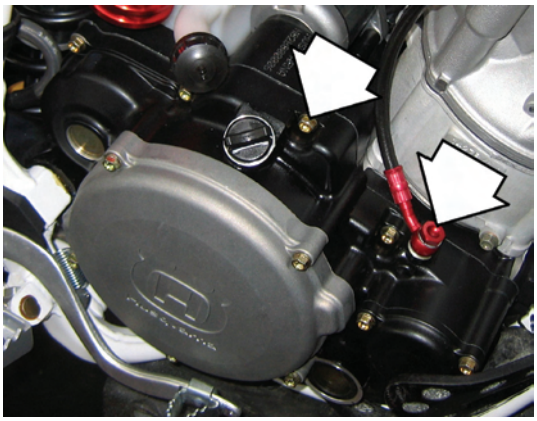

Reassemble R. H. crankcase cover gasket, reassemble cover and tighten 12 fastening screws at 8 Nm-6 ft/lb (8 mm wrench). Reassemble oil line bolt on crankcase cover (13 mm wrench; tighten at 15 Nm-1,5 kgm-11 ft/lb).

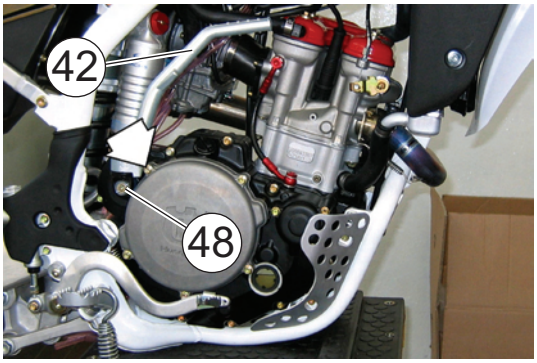

Assemble kick start pedal (42) tightening the screw (48) with 4 mm allen wrench; (tighten at 8 Nm-0,8 kgm-6 ft/lb); verify that the start pedal, in rest position, does not touch the crankcase cover.

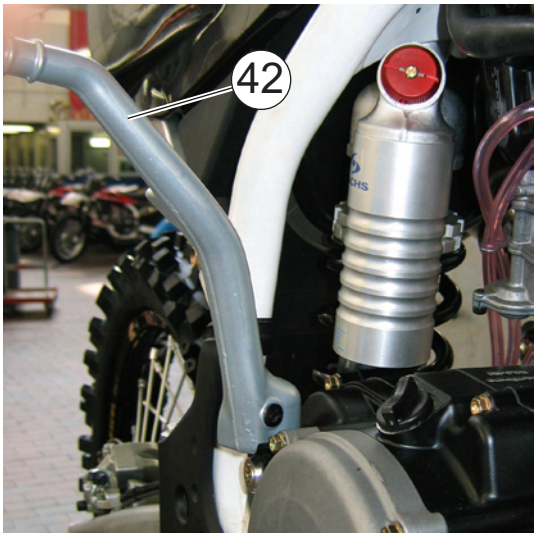

Check that the pedal (42) works and returns freely.

Pour the proper oil amount in the crankcase (1,5 l.-1.3 Imp. Quarts- 1.6 U.S. Quarts of AGIP RACING 4T/ 10W-60). Reassemble the rear brake control pedal (6 mm allen wrench; tighten fastening bolt at 42 Nm-4,2 kgm-31ft/lb+LOCTITE 243). Check that O-Rings are in place. Check the brake fluid level (A) in the tank. Connect the battery to electric system (E.15) and test kick start pedal (42).

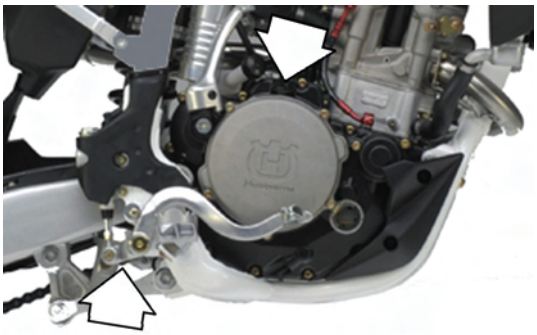

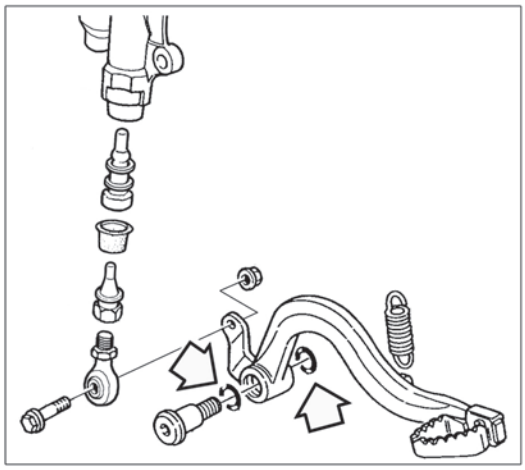

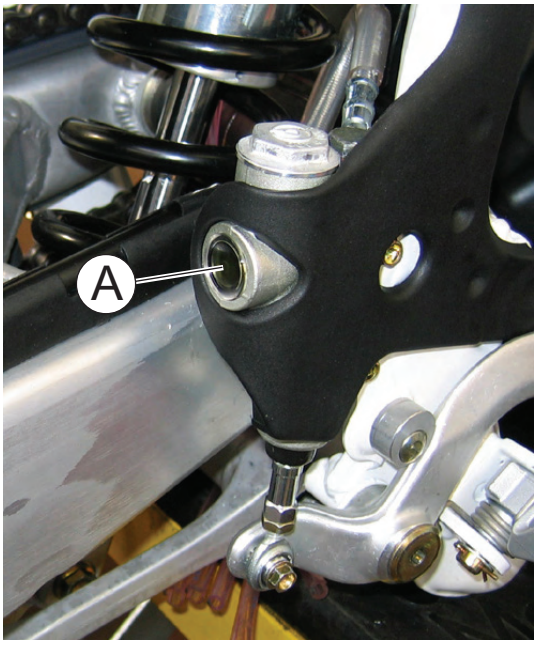

9- Assemblling instructions for full power version on TE-SMR models
(unless specified, instructions are referred to both the models). Illustrations are merely for demonstration purposes and could not exactly match the detail described.

TE

SMR

All modifications reported below cause THE REGISTERED VEHICLE TO BE NON COMPLIANT and unsuitable for circulating on public roads: consequently it may be used only in “CLOSED CIRCUITS” by authorised subjects holding the relevant driving licence.

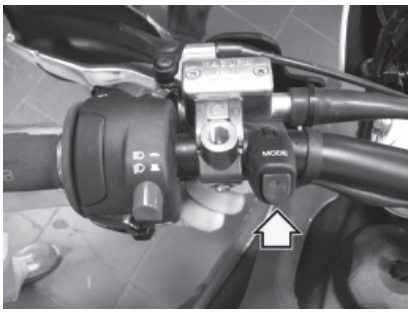

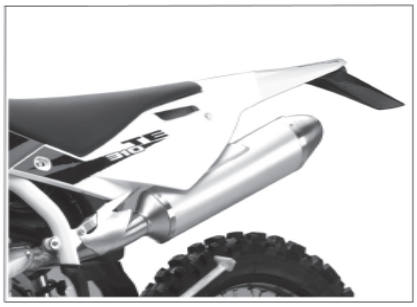

“KIT” ASSEMBLING INSTRUCTIONS

INTRODUCTION
Using the above mentioned parts automatically implies the modification of the central unit mapping, thus operating the vehicle at full power.
The vehicle cannot be used without battery under any circumstances: do not remove the battery.
If the battery is removed/disconnected while the engine is running, the injection system is damaged seriously; do not attempt to disconnect the battery.

Full power version components

1) Lambda sensor plug 8000A7724

2) Lambda sensora plug gasket 8000A7749

3) Lambda sensor connector 8000A6750

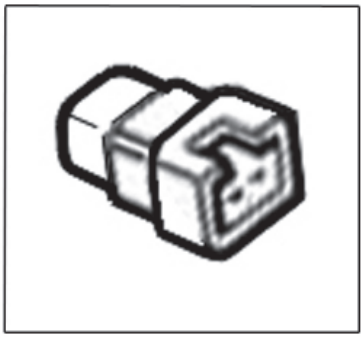

4) Air filter cage 800069549

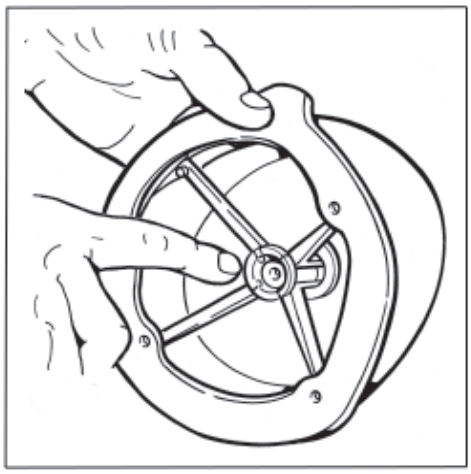

Throttle body plate removal

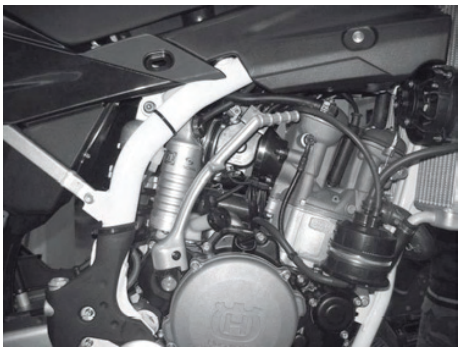

Identify the cover of the throttle cable pulley of the throttle body located on the right side of the vehicle.

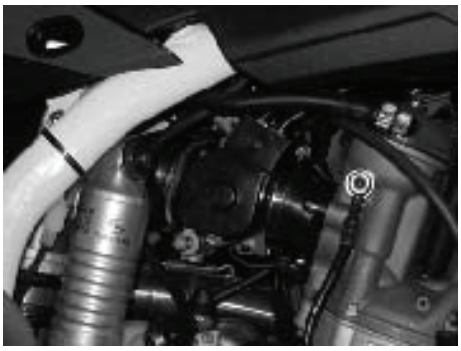

Move away the pedal starting lever from the pulley cover.

Loosen the hexagonal socket screw holding the plastic cover.

Remove the screw.

Remove the cover of the throttle cable pulley.

Loosen the nuts of the throttle cables.

Remove the throttle cables from their housings.

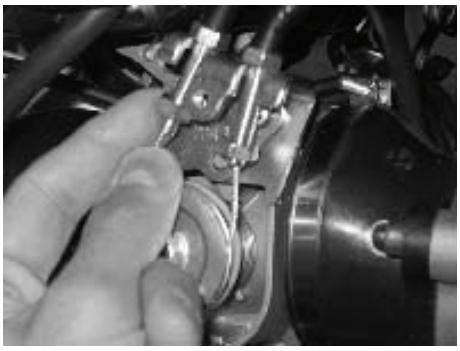

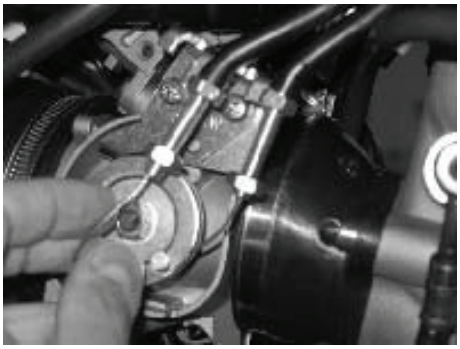

Loosen both screws fastening the pulley locking plate.

Remove the locking plate.

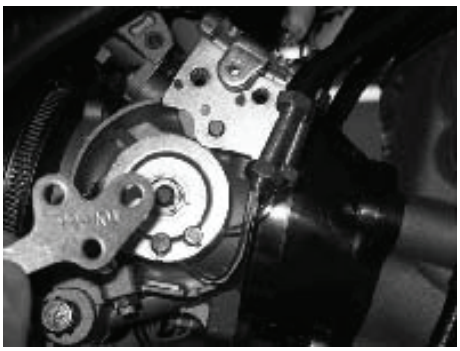

Apply thread locking compound, e.g. “Loctite 243”, to the previously removed plate holding screws.

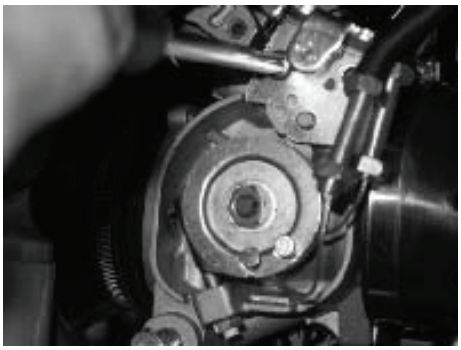

Tighten both screws.

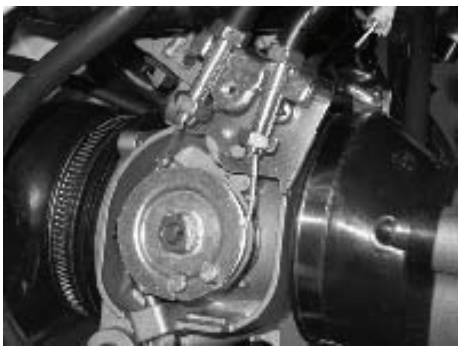

Place the throttle cables into their housings.

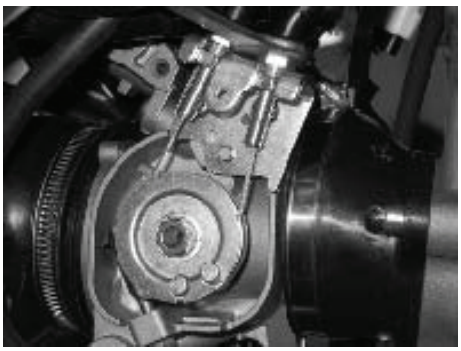

Tighten the throttle cables by means of the relevant nuts. Make sure that the cable has a certain clearance. Make sure that the cables are not tight or locked in any way.

Position the pulley cover back into its housing.

Position the pulley cover into its housing.

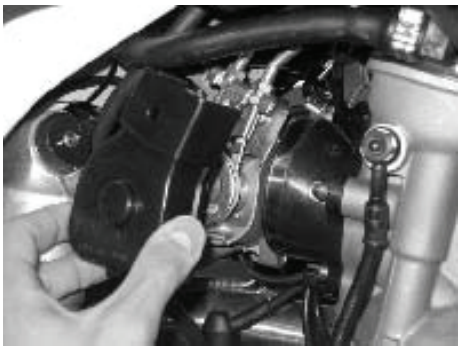

Anchor the pulley cover by means of the previously removed suitable screw.

Catalyst removal **(TE)**

Remove the saddle and L.H. side panel. Using an 8 mm T-shaped spanner on the outside and a 10 mm T-shaped spanner on the inside, remove the locking screw of the muffler. Remove the spring between muffler and the central pipe then with an 8 mm T-shaped spanner remove the front fastening screw of the central pipe to the frame. Pull out the muffler.

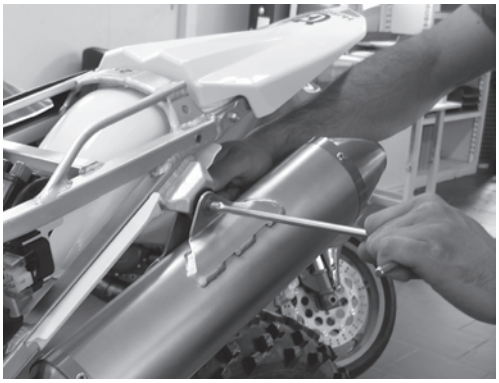

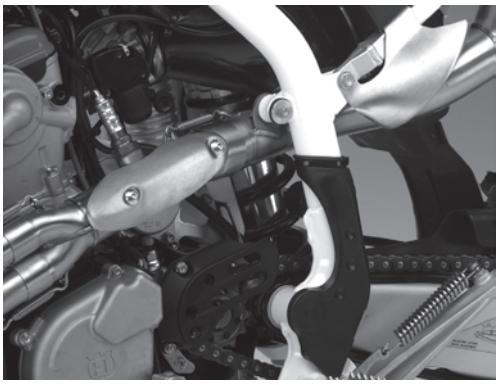

Pull out the catalyst (1) from the exhaust central pipe.

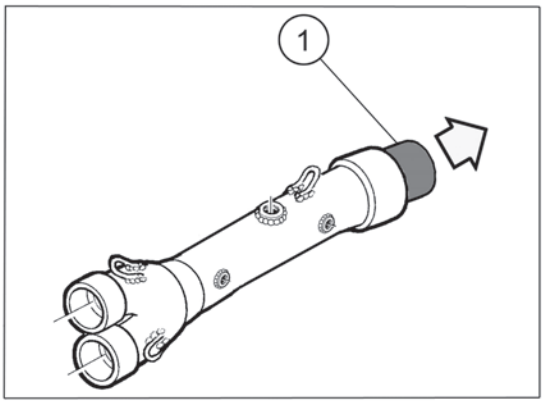

Intake silencer replacement

Remove the battery then place it on the side of the bike.

Remove the wing nut bolt and the air filter.

Remove the intake silencer from the air filter then replace it with the filter cage 800069549 supplied with the KIT.

Reassemble the new air filter assy. according with the pictures.

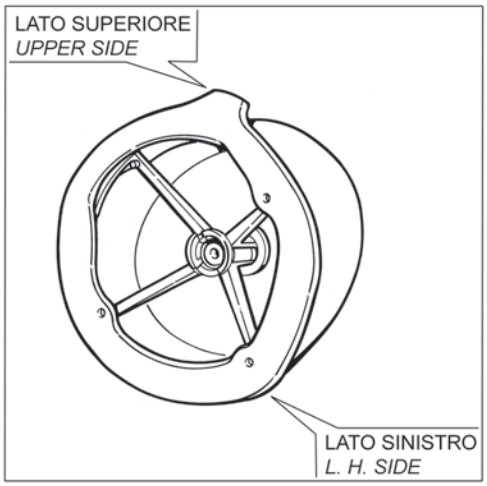

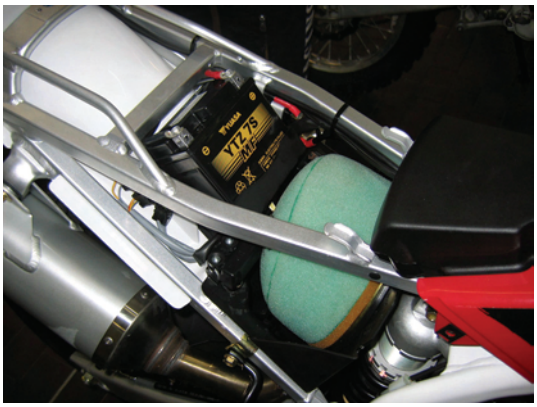

Reassemble the battery.

Full power version components assembling

Loosen the lambda probe from the exhaust pipe.
DO NOT EXPOSE THE PROBE TO OIL OR SOLVENTS.

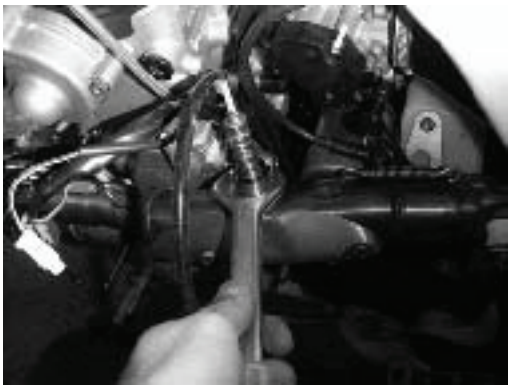

Assemble the 8000A7724 probe plug with the 8000A7749 gasket.

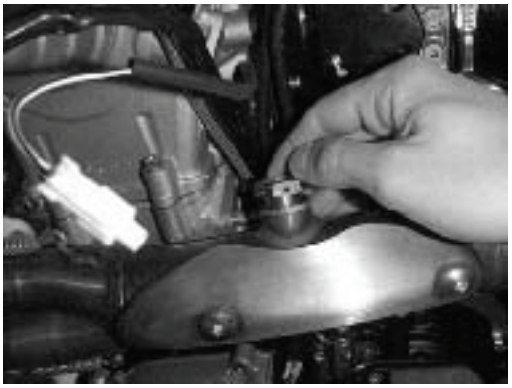

Tighten the lambda probe plug.

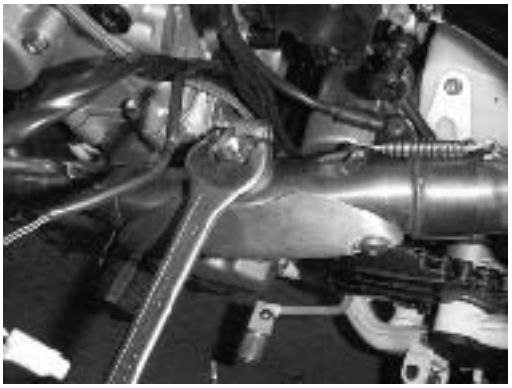

Detach the lambda probe connector from the main wiring harness then mount in its place the connector 8000 A6750.

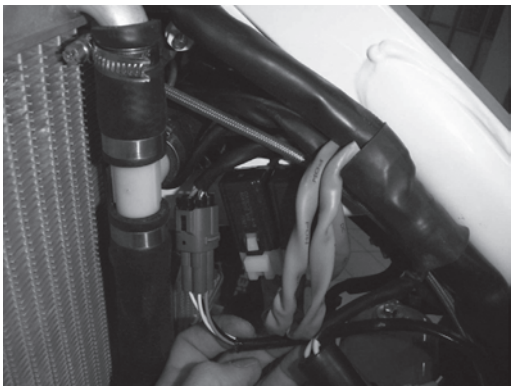

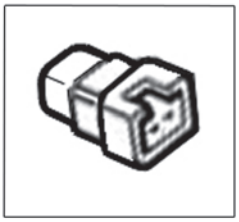

“DUAL MODE” BUTTON ASSEMBLING (TE)

Dual mode button 8000H0590

The “dual mode” button allows to select the correct map according with the ground conditions (knob in rest position to select dry ground map- SEL 1 on instrument display; push knob to select wet ground map- SEL 2 on instrument display).

Remove the upper fastening screw of the the headlamp carrier to the instrument panuel support; push forward the headlamp carrier and pull it towards the high in order to uncouple from the two lower supports. Remove the headlamp carrier.

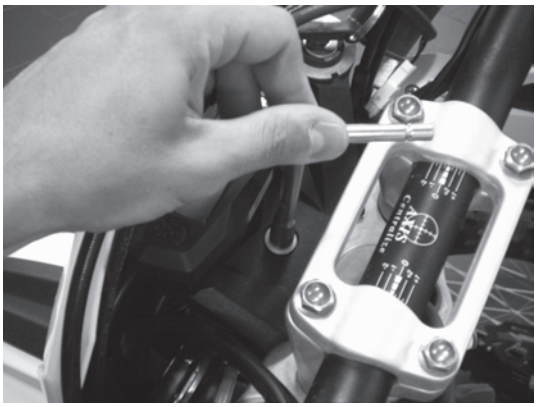

Remove the plug on the cable located behind the headlamp carrier.

Assemble the “dual mode” button connector on the above mentioned cable.

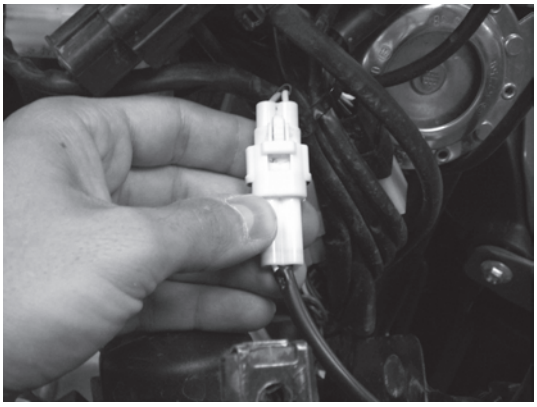

Assemble the “dual mode” button next to the L.H. commutator and fasten it with the supplied clamp.

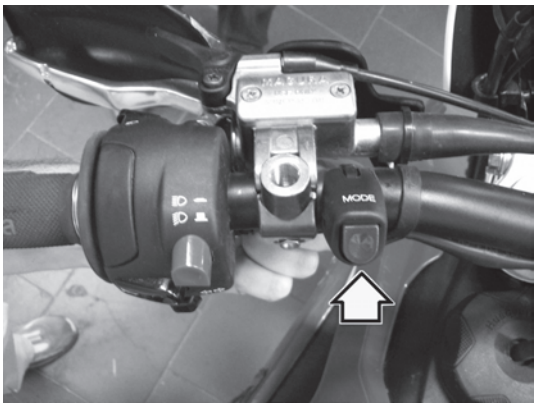

NOTES
- When turn the ignition key in position IGNITION, for the first 2 seconds, the instrument shows the version of the checking SW; after the check, the instrument shows **ALWAYS** the map **SEL 1**.

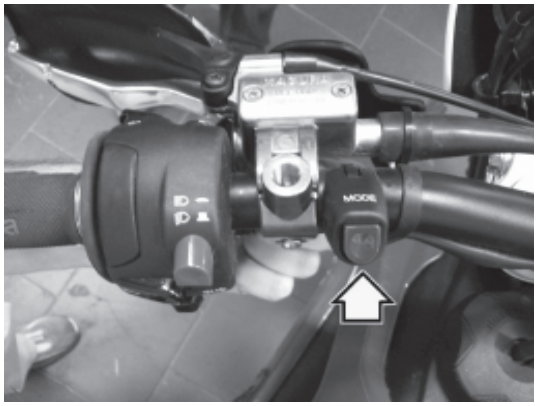

The switching to **SEL 2** is possible with **ENGINE ON**, pushing the “dual mode” button for 1 second, with a water temperature of approx. 40 ° C / 104 ° F and approx. 10 seconds after the engine start. In the absence of these conditions, the switching will not be made. From **SEL 2,** pushing the “dual mode” button for 1 second, **SEL 1** is selected again, and so on.

SEL 1: MAP FOR DRY GROUND

SEL 2: MAP FOR WET GROUND

SEL 1 → **SEL 2** → **SEL 1** → **SEL 2 ...**

“RACING” LICENSE PLATE HOLDER ASSEMBLING

Remove the rear turn indicators.

Licence plate holder kit 8000B1641

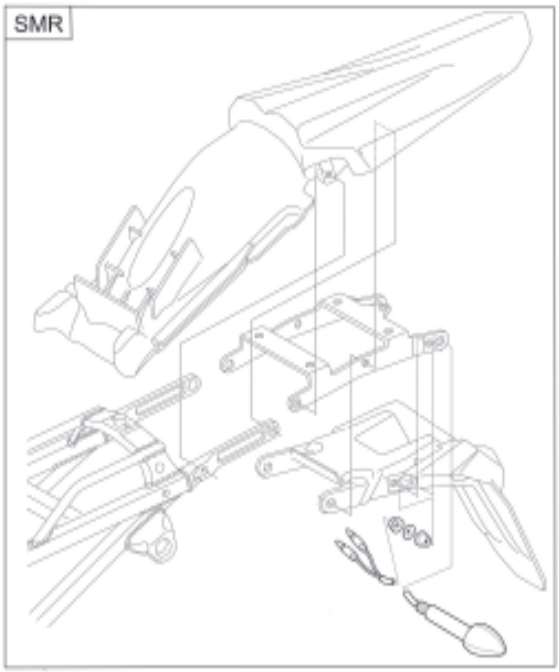

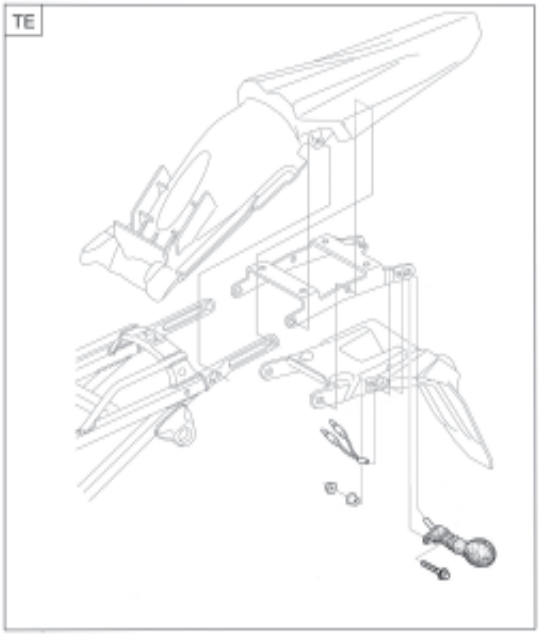

Drill one 6.5 mm hole on the rear mudguard as shown in the picture, then two additional holes with the same diameter matching the holes of the Racing light. Use the available screws to anchor.

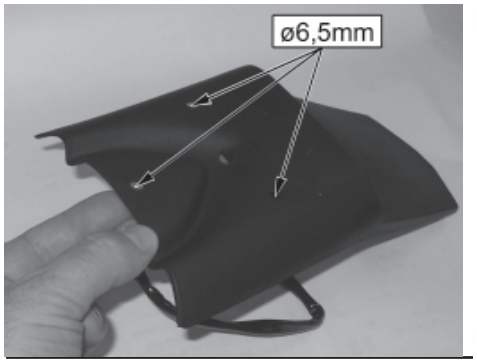

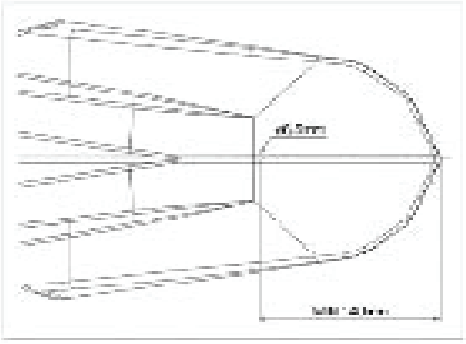

Pass the licence plate holder cables along the rear frame. Connect the rear light connector.

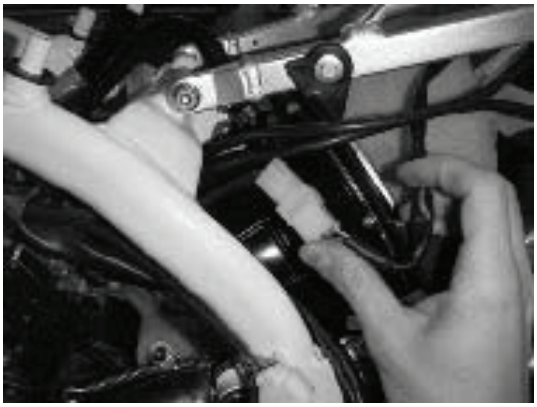

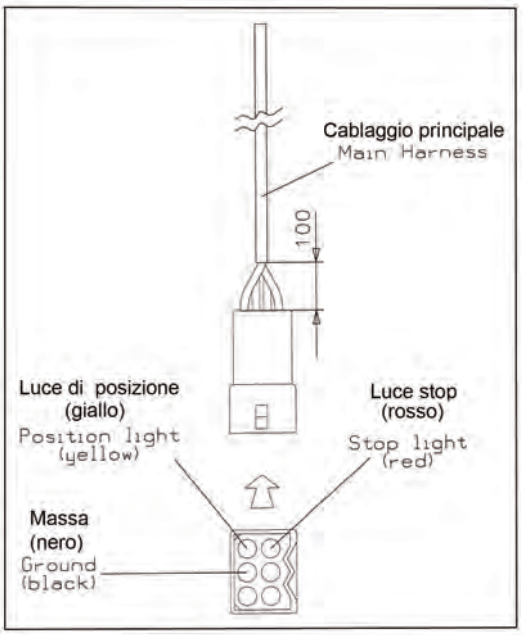

Reassemble the previous removed parts.

HYDRAULIC CONTROL CLUTCH

Hydraulic clutch system P.2
Discharge of hydraulic system fluid P.4
Overhaul of the control pump for clutch release P.4
Bleeding of the hydraulic system P.5

Section P

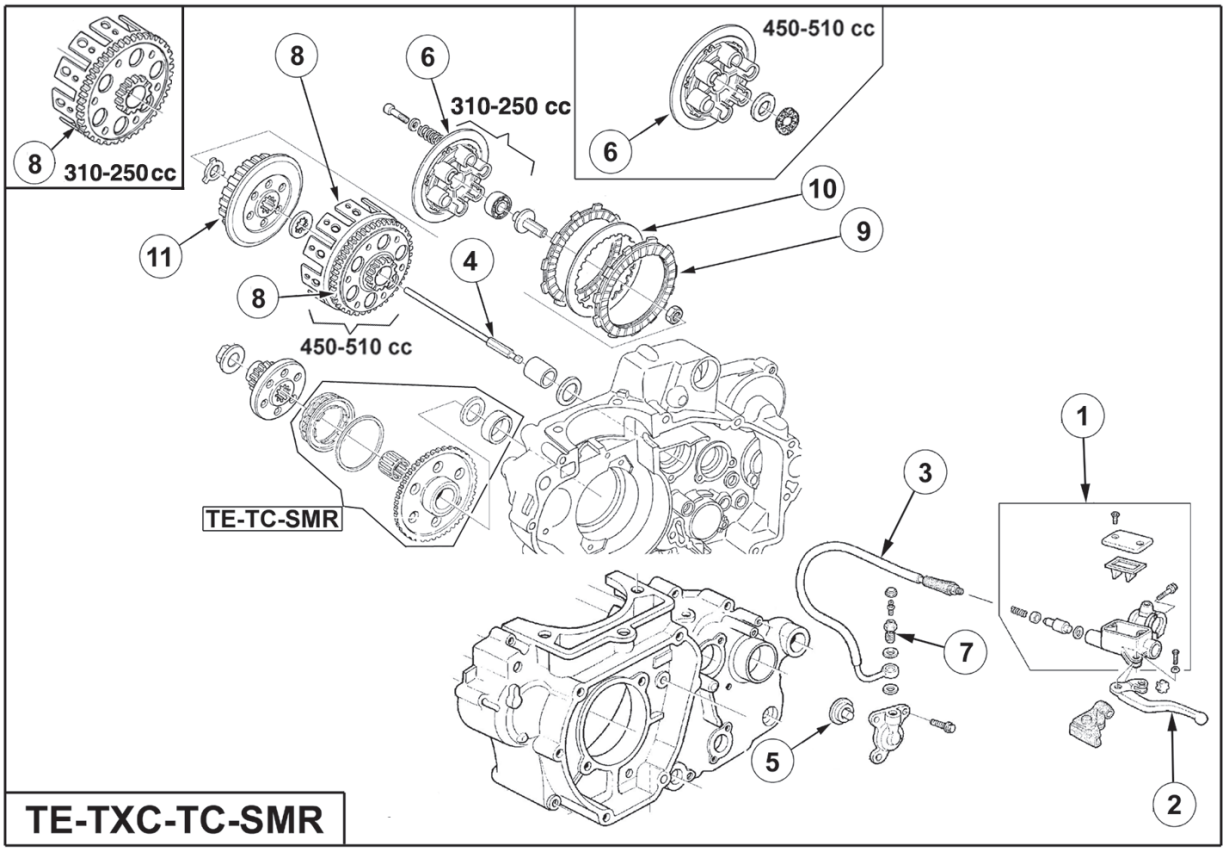
8
310-250cc
8
6
310-250 cc
450-510 cc
6
10
9
11
4
8
450-510 cc
TE-TC-SMR
1
3
7
5
2
TE-TXC-TC-SMR

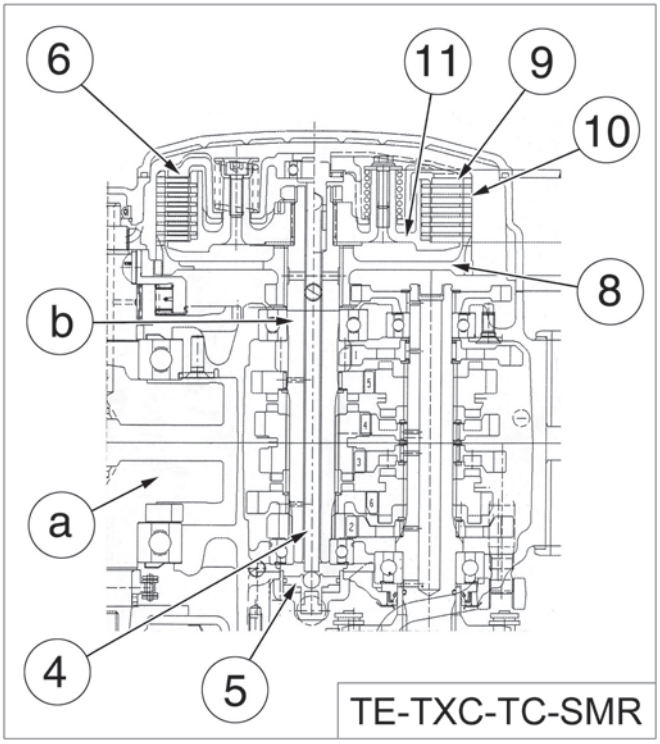
6
11
9
10
8
b
a
4
5
TE-TXC-TC-SMR

Hydraulic clutch system

The hydraulic system consists of a pump with its own tank, placed on handlebar L.H. side, and a small piston, placed in the L.H. engine crankcase. The clutch desengagement is effectued by the slave cylinder (5) that, acting on the push rod, move the pressure disc (6). The drive between the crankshaft (a) and the main shaft (b) of the gearbox is effected by the gear on the clutch housing (8). The clutch housing contains both the driving discs (9) and driven discs (10); the driven discs move the clutch hub (11) fastened on the gearbox main shaft.

1- Clutch master cylinder
2- Clutch control lever
3- Master cylinder/ slave cylinder hose
4- Push rod
5- Clutch slave cylinder
6- Pressure disc
7- Bleeder valve
8- Clutch housing with clutch ring gear
9- Clutch driving disc
10- Clutch driven disc
11- Clutch hub
a- Crankshaft
b- Main shaft

Since the fluid employed inside the hydraulic system can damage the paint, pay the utmost attention during every operation to the system.

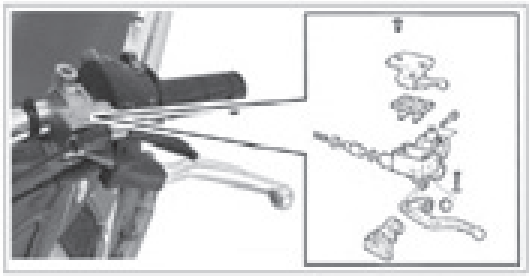

Discharge of hydraulic system fluid

Connect a small plastic hose to the discharge valve and unscrew it by one or two turns. Remove the reservoir cover and the diaphragm and act release control lever until all fluid is discharged.

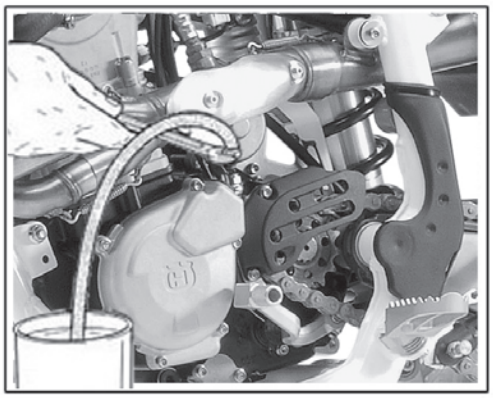

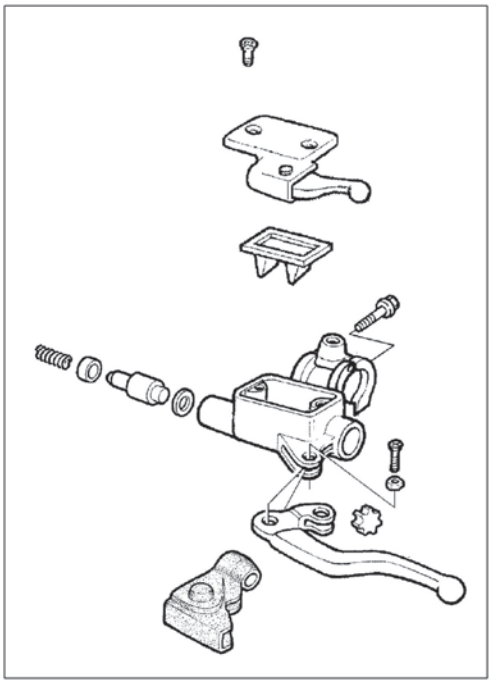

Overhaul of the control pump for clutch release

Drain the system, detach the pump from the L.H. side of the handlebar and disassemble the pump completely. Replace all gaskets, re-assemble the pump and assemble it again on the handlebar. Connect the hose and pour new fluid from the tank; bleed the system as shown on page P.5.

Bleeding of the hydraulic system
Proceed as follows:
- remove screws (1), cap (2) and rubber pump diaphragm (4);
- remove the rubber cap (3) and the bleeding nipple (5);
- mount a syringe in the bleeding nipple hole, then refill with fresh fluid (see LUBRICATION TABLE on page A.9).

: NEVER use brake fluid.

- refill until fluid is discharged from the lower hole (B) on the pump body WITHOUT BUBBLES. The fluid level MUST NEVER BE below 4 mm from the top (A) of the clutch pump body (see picture). Reassemble the removed parts.

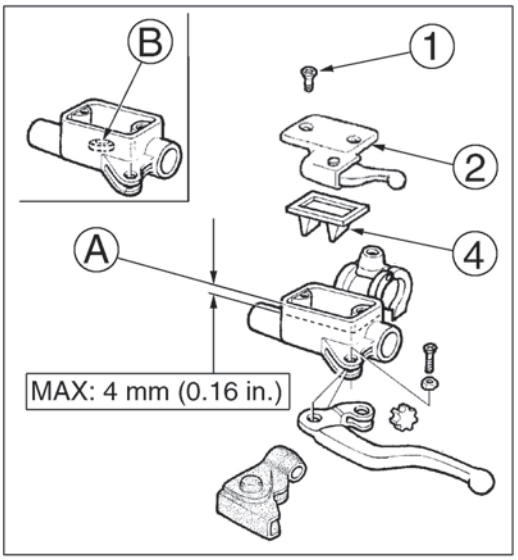

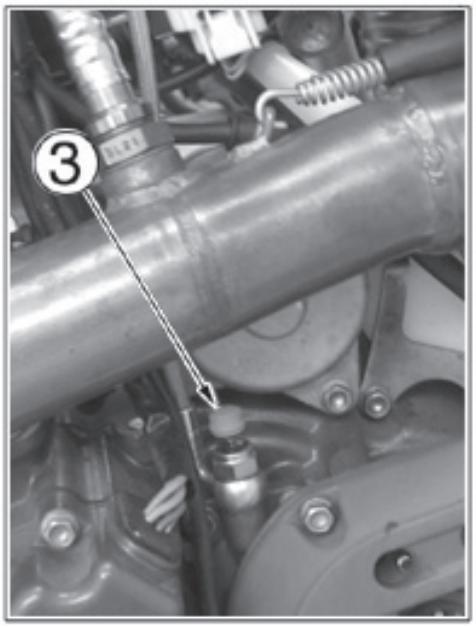

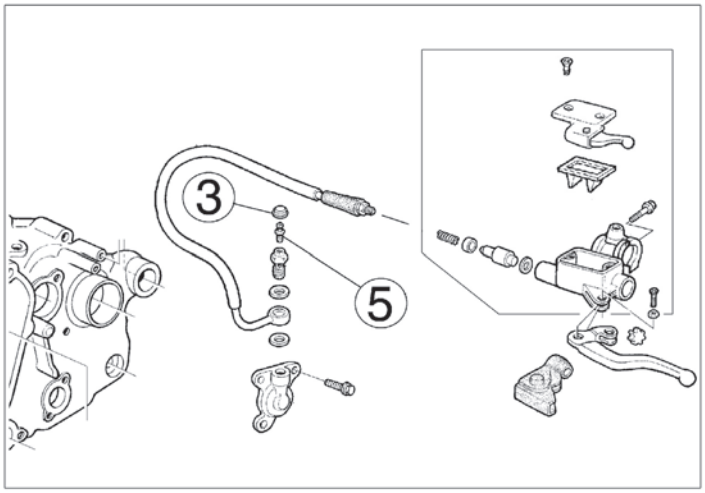

Section Q

OPTIONAL PARTS LIST (TE)

Pos.	Code Nr.	NAME	MODELS
1	8A0096837	REAR SPROCKET Z=47	(1) 250-310
	8B0096837	REAR SPROCKET Z=48 (1)	250-310-450-510
	8C0096837	REAR SPROCKET Z=49 (1)	250-310-450-510
	8D0096837	REAR SPROCKET Z=50 (1)	450-510
2	800063829	DRIVE SPROCKET Z=14 (1)	250-310-450-510
	800063827	DRIVE SPROCKET Z=12 (1)	250-310-450-510
	800063830	DRIVE SPROCKET Z=15 (1)	250-310-450-510
3	8000H0772	LICENCE PLATE HOLDER KIT RACING (1)	250-310-450-510
4	8000A5755	ENGINE GASKET KIT (1)	250-310
	8000A5982	ENGINE GASKET KIT (1)	450-510
5	8000B0373	ENGINE SEALS KIT (1)	250-310
	8000B0364	ENGINE SEALS KIT (1)	450-510
6	800098504	REAR SHOCK ABSORBER SPRING (K=5,4 Kg/mm) (1)	450-510
	8000H0076	REAR SHOCK ABSORBER SPRING (K=5,6 Kg/mm) (1)	250-310

OPTIONAL PARTS LIST (TC)

Pos.	Code Nr.	NAME	MODELS
1	8A0096837	REAR SPROCKET Z=47 (1)	450-510
	8B0096837	REAR SPROCKET Z=48 (1)	450-510
	8C0096837	REAR SPROCKET Z=49 (1)	450-510
2	800063827	DRIVE SPROCKET Z=12 (1)	450-510
	800063828	DRIVE SPROCKET Z=13 (1)	450-510
	800063830	DRIVE SPROCKET Z=15 (1)	450-510
4	8000A5982	ENGINE GASKET KIT (1)	450-510
5	8000A5736	ENGINE SEALS KIT (1)	450-510
6	800098504	REAR SHOCK ABSORBER SPRING (K=5,4 Kg/mm) (1)	450-510

OPTIONAL PARTS (TXC)

Pos.	Code Nr.	NAME	MODELS
1	8A0096837	REAR SPROCKET Z=47 (1)	250
	8B0096837	REAR SPROCKET Z=48 (1)	250-450-510
	8C0096837	REAR SPROCKET Z=49 (1)	250-450-510
	8D0096837	REAR SPROCKET Z=50 (1)	450-510
2	800063827	DRIVE SPROCKET Z=14 (1)	250-450-510
	800063829	DRIVE SPROCKET Z=12 (1)	250-450-510
	800063830	DRIVE SPROCKET Z=15 (1)	250-450-510
3	8000H0772	LICENCE PLATE HOLDER KIT RACING (1)	250-450-510
4	8000A5755	ENGINE GASKET KIT (1)	250
	8000A5982	ENGINE GASKET KIT (1)	450-510
5	8000B0373	ENGINE SEALS KIT (1)	250
	8000B0364	ENGINE SEALS KIT (1)	450-510
6	800098504	REAR SHOCK ABSORBER SPRING (K=5,4 Kg/mm) (1)	450-510
	8000H0076	REAR SHOCK ABSORBER SPRING (K=5,6 Kg/mm) (1)	250
9	8000B1546	NOISE REDUCTION DEVICE	250-450-510
11	8000B0455	SILENCER (TITANIUM) (1)	250-450-510

OPTIONAL PARTS LIST (SMR)

Pos.	Code Nr.	NAME	MODELS
1	8A00A4859	REAR SPROCKET Z=43	450-510
	8B00A4859	REAR SPROCKET Z=44	450-510
	8G00A4859	REAR SPROCKET Z=45	450-510
2	800063829	DRIVE SPROCKET Z=14	450-510
3	8000H0772	LICENCE PLATE HOLDER KIT RACING (1)	450-510
4	8000A5982	ENGINE GASKET KIT	450-510
5	8000B0364	ENGINE SEALS KIT	450-510
10	8000B0591	KICKSTARTER KIT	450-510

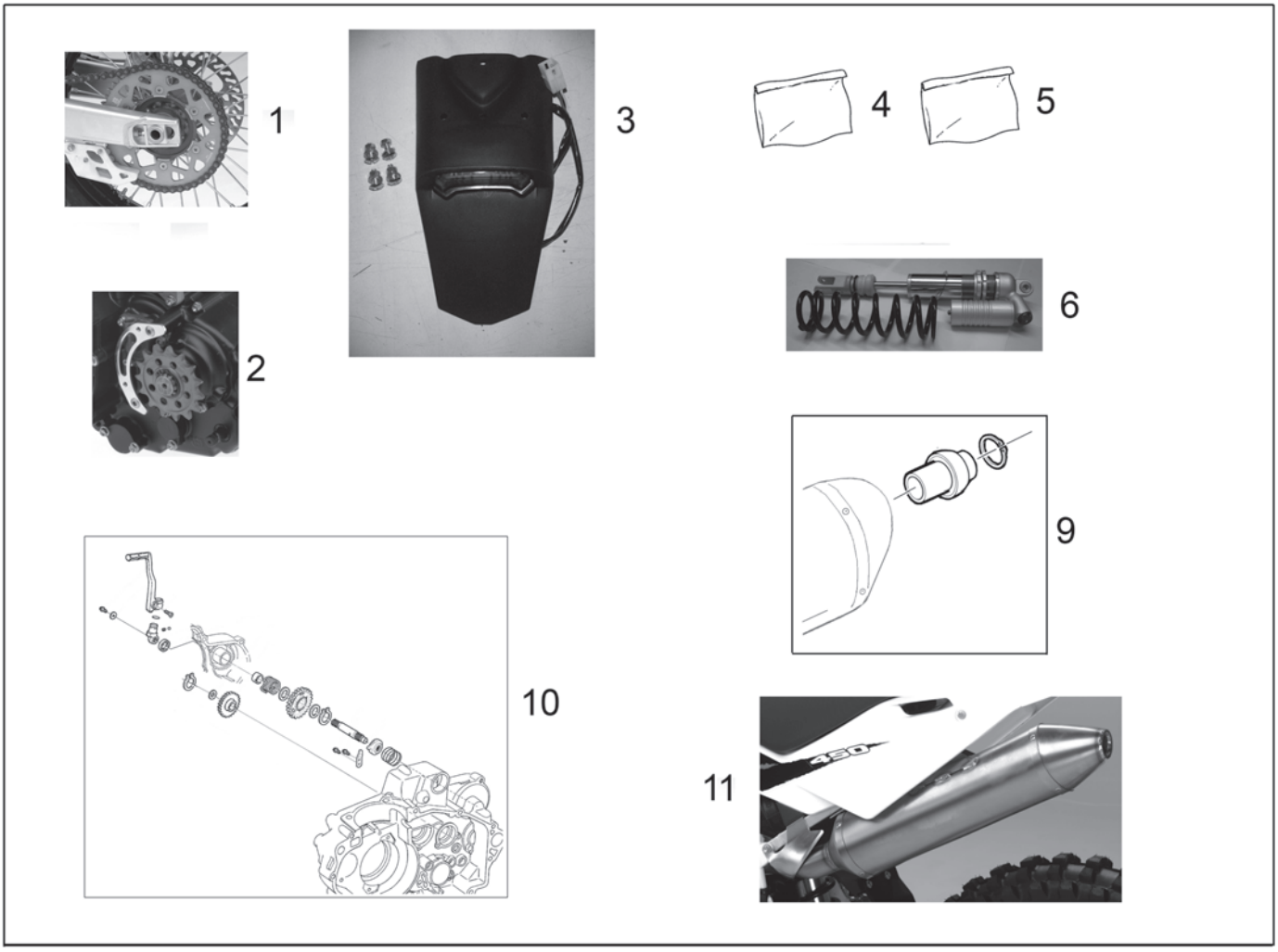

Fuel injection system S.2
Operating instructions for the
"DIAGNOSIS SOFTWARE KIT" on the fuel injection S.3
Fuel pump check S.5
Relay check S.6

Section S

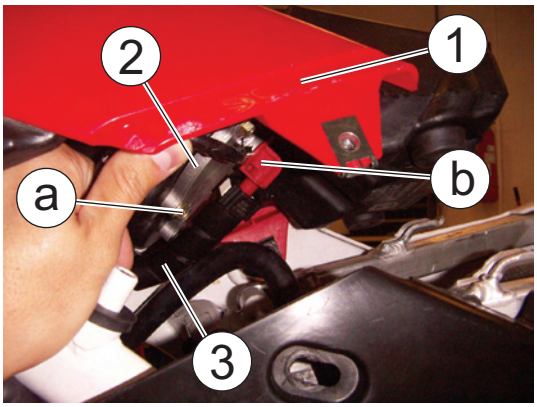

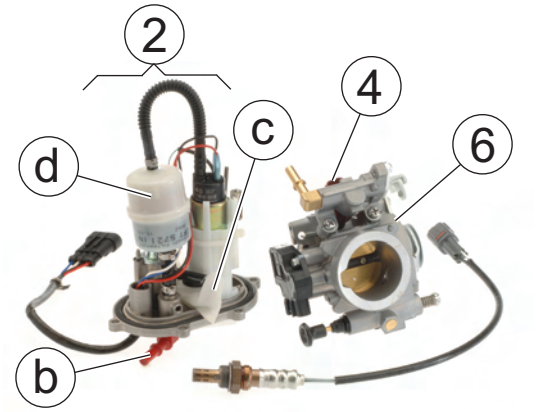

FUEL INJECTION SYSTEM

The fuel injection system consists of: fuel tank (1), electric pump (2), hose (3) and injector (4). The fuel in the tank is pumped by the fuel pump and the pressurized fuel flows into the injector installed in the throttle body (6). The fuel is injected into the throttle body with a conical dispersion when the injector opens according to the injection signal coming from the Electronic power unit (5) located under the fuel tank.
The items to be considered for the correct output of the fuel in every condition of use of the vehicle are the followings:

- Air temperature in the intake manifold;
- Engine coolant temperature;
- Atmospheric pressure in the intake manifold (in the current position and altitude);
- Throttle opening percentage;
- SMR: Vehicle rollover;
- Rich or lean combustion mixture (O2 sensor);
- Battery voltage;
- Sensors source;
- Current gear position;
- Pulse width of fuel injector;
- Ignition coil;
- O2 heater.

The diagnostic software "DIAGNOSIS SOFTWARE KIT" (see on pages S.3-S.4) allows the check of the above mentioned parts in case of fuel injection system malfunction.

The electric pump (2) is assembled in the bottom of the fuel tank (1) and consists of rotor, magnet, impeller, brushes, control valve and relief valve. The ECU (5) checks ON/OFF condition of the pump.
In order to remove the fuel pump, first it is necessary to remove the fuel tank as shown on page E.23, then remove the six fastening screws (a); for the reassembly, reverse the above mentioned operations (for the fuel pump check, please see page S.5).

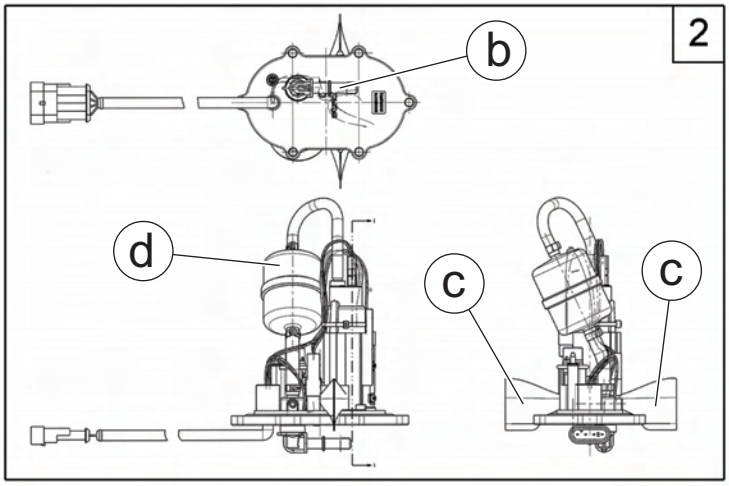

a- Fuel pump fastening screw
b- Delivery union
c- Pump filter
d- Fuel filter

Operating instructions for the "DIAGNOSIS SOFTWARE KIT" on the fuel injection system

Premised that **the fuel injection system doesn't need any programmed maintenance**, the Diagnosis Software Kit code no. 8000 A9634 allows to effect the check of the components of the fuel injection system in case of malfunction. In case of malfunction on the right side of the instrument display will be displayed the warning message "FAIL", with the ignition key in ON position and the right commutator in RUN position.

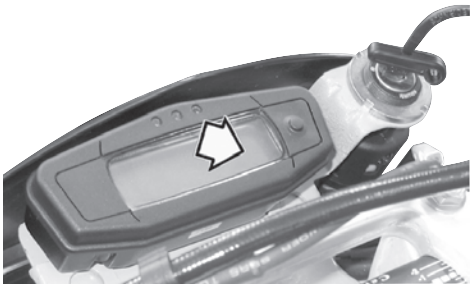

The "DIAGNOSIS SOFTWARE KIT" (A) consists of:
- CD containing "Diagnostic Tool" Software, User's Guide (PDF file), Operation Manual (PDF file);
- User's Guide handbook for the Software Use;
- Operation Manual handbook;
- Connecting cable PC-ECU interface connector.

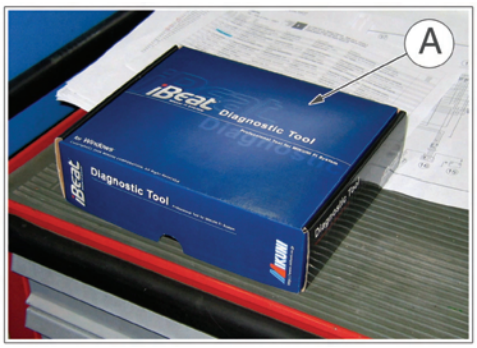

After DIAGNOSIS SOFTWARE loading, according with the User's Guide instructions, proceed as follows:
- remove the front headlamp holder as shown on page M.30;
- remove the plug (B) from the ECU connector interface (C);
- connect the cable (D) of the kit to the connector (C) and to the serial port (E) on PC;
- turn the ignition key (F) in ON position then place the R.H. commutator in RUN position;
- start the "Diagnostic Tool" Software previously installed, then carry out the controls.

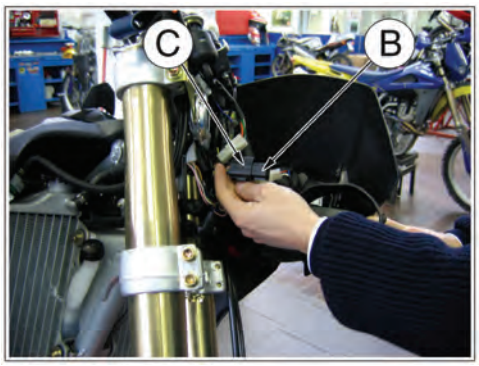

If the throttle body (H) will be removed and/or replaced, it is necessary to adjust the T.P.S. again selecting the options "T.P.S. Idle Adjustment Command" (page 32 on Operation Manual) and "Feedback Adjustment Command" (page 29 on Operation Manual). See fig. 9-3-4 on page S.4 for the "Feedback Adjustment Value".

The components of the fuel injection system that can be checked with this diagnosis software are the followings:

1- AIR TEMPERATURE (Air temperature in the intake manifold);
2- COOLANT TEMPERATURE (Engine coolant temperature);
3- ATMOSPHERIC PRESSURE (Atmospheric pressure in the intake manifold in the current position and altitude);
4- THROTTLE POSITION
5- TILT SENSOR (SMR:senses rollover of the vehicle)
6- O2 SENSOR (Senses rich or lean combustion mixture)
7- BATTERY SENSOR (Battery voltage)
8- SENSORS SOURCE (It supplies energy to the sensors)
9- GEARSHIFT POSITION (Current gear position)
10- INJECTOR (Pulse width of fuel injector)
11- IGNITION COIL (It accumulates energy and discharges said energy to spark plug)
12- O2 HEATER (It warms the O2 sensor to a temperature suitable for the sensor to give stable output)

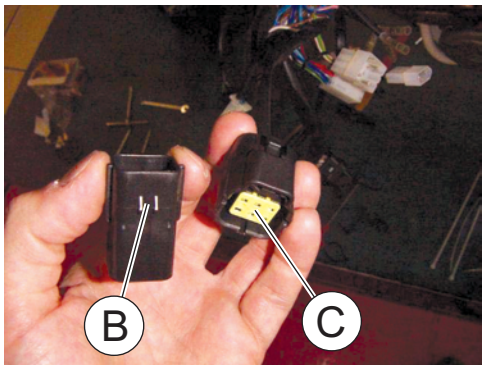

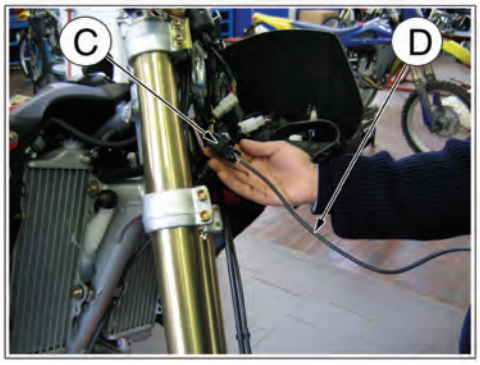

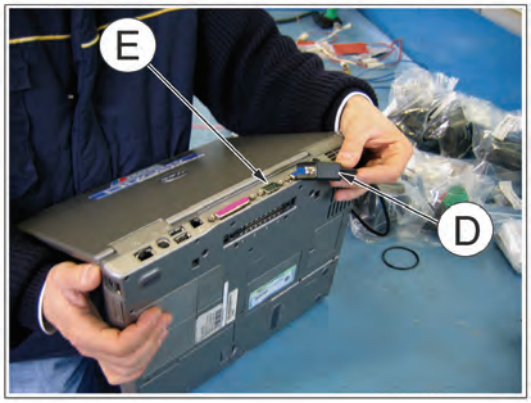

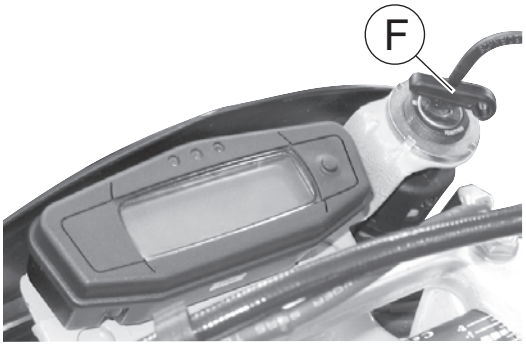

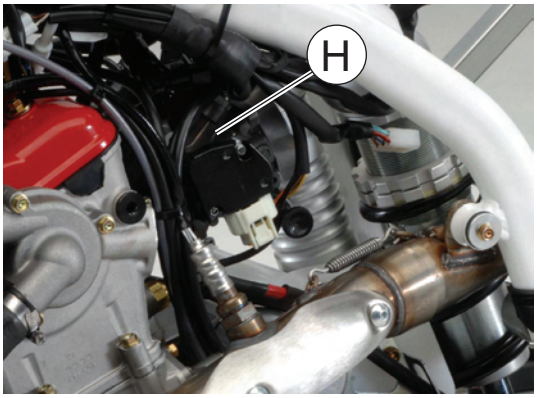

This diagnosis software allows, besides the identification of the malfunctions in progress, also the memorization of those that are already occurred and that have been eliminated: for these last ones it is possible to effect the cancellation, following the instructions of the Operation Manual (page 29).

The ECU memorizes the number of the engine running hours (with tolerance: + or - 1 hour) and, in the case of the first equipment, the identification numbers of the frame (VIN) and of the engine (Engine No.) of the motorcycle. In case of replacement, the new ECU will only show the number of engine running hours.

NOTES

The NEUTRAL green warning light comes on ONLY when the ignition key is in ON position and the R.H. commutator is in RUN position.

The front-rear lights and the instrument display will come on when the ignition key is in ON position.

The functions controlled by the L.H. commutator and the rear stop light can be selected ONLY when the engine is running.

For the fuel pump and relays check, please see on pages S.5 and S.6.

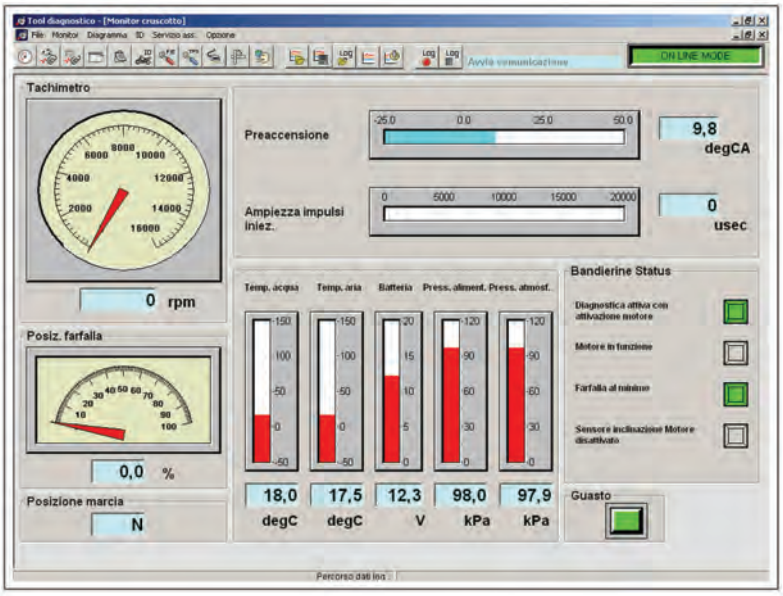

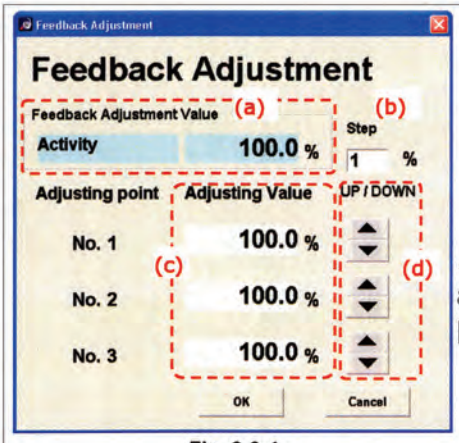

Fig. 9-3-4

Adjust item No. 1 so that the "Feedback correction value" is ~ 100.0 %

Adjusting points No. 2 and 3: THEY MUST NOT BE MODIFIED (100%)

Fuel pump check
Remove the pump as shown on page S.2.
- A: reserve sensor
Check that in the reserve sensor has not remained any gasoline therefore set the meter on "Impedance" position and effect the reading on the cables BLUE and WHITE. The value will have to be: 1.3 KOhms (+/- 10%) to 20°C.
- B: pump working
Connect the RED (+) and BLACK (-) cables to a 12V stabilized feeler then check that the fuel pump runs.

Don’t continuously effect this last check for more than 3 seconds.

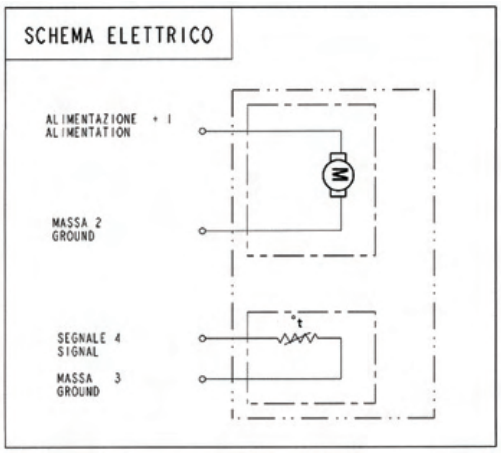

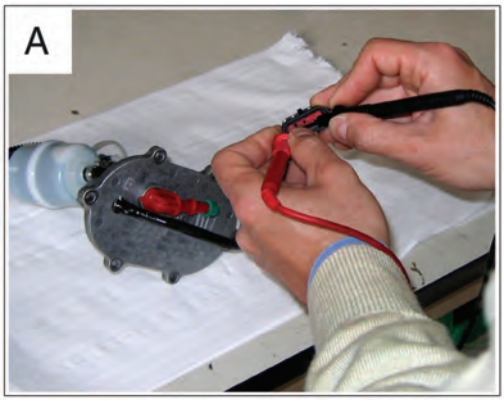

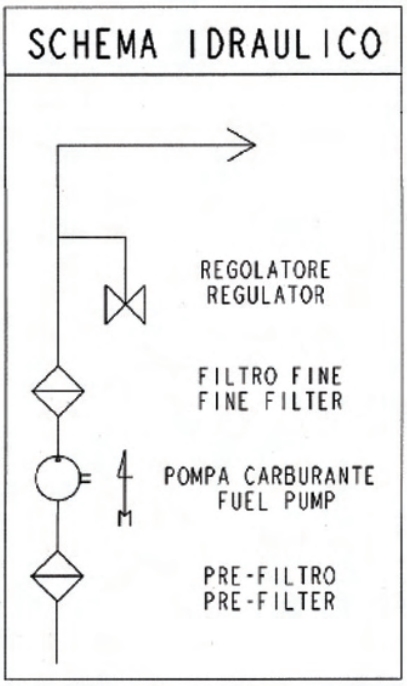

Relay check

Remove the saddle and the the fuel tank as shown on pages E.15-E.23. Remove the relays (1) located on the frame, R.H. side (no. 1) and L.H. side (no. 2).

A: set the meter on "Impedance" position and check that the exciter coil functions properly; the value will have to be: 80 Ohm (+/- 10%) at 20°C.

B: set then the meter on "Continuity" position and check that the circuit is open.

C: using a 12V stabilized feeler for the coil and check that the circuit is closed.

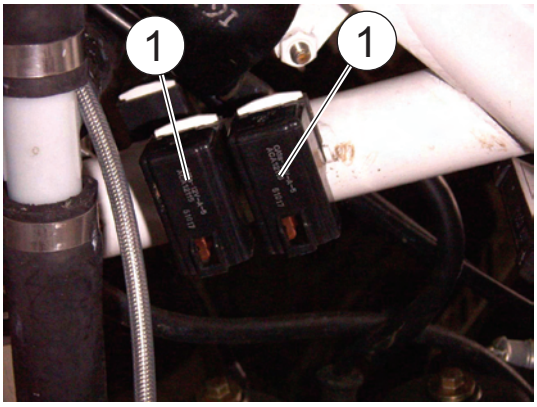

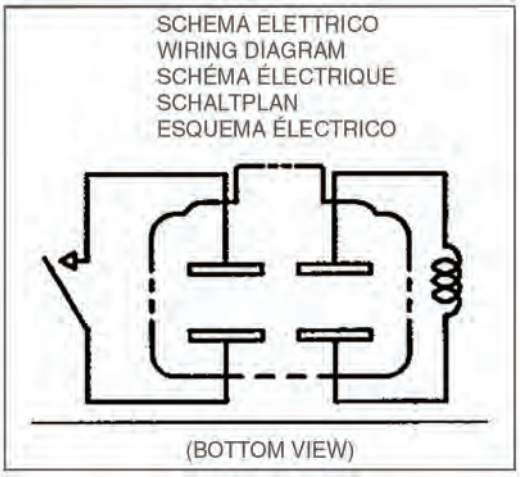

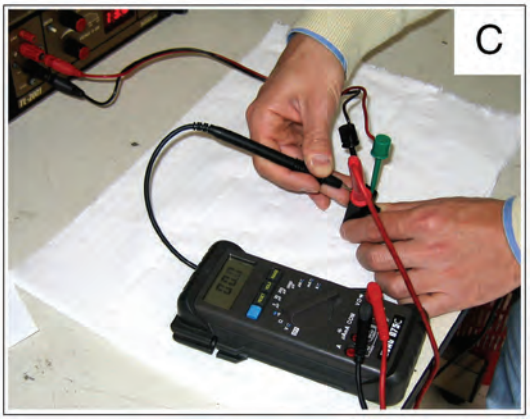

Section T

LUBRICATION SYSTEM PARTS

Nr.	NAME
1	Double net filter
2	Main oil pump
3	Easy-change filter
4	Piston - D.C. roller bearing - Conn.-rod - Starter driver wheel
5	Camshaft (Intake)
6	Camshaft (Exhaust)
7	Spark and timing chamber
8	Cranking mechanism chamber
9	Net filter
10	Oil pump for secondary circuit
11	Mainshaft
12	Counter shaft
13	Primary drive driven gear

LUBRICATION SYSTEM DIAGRAM

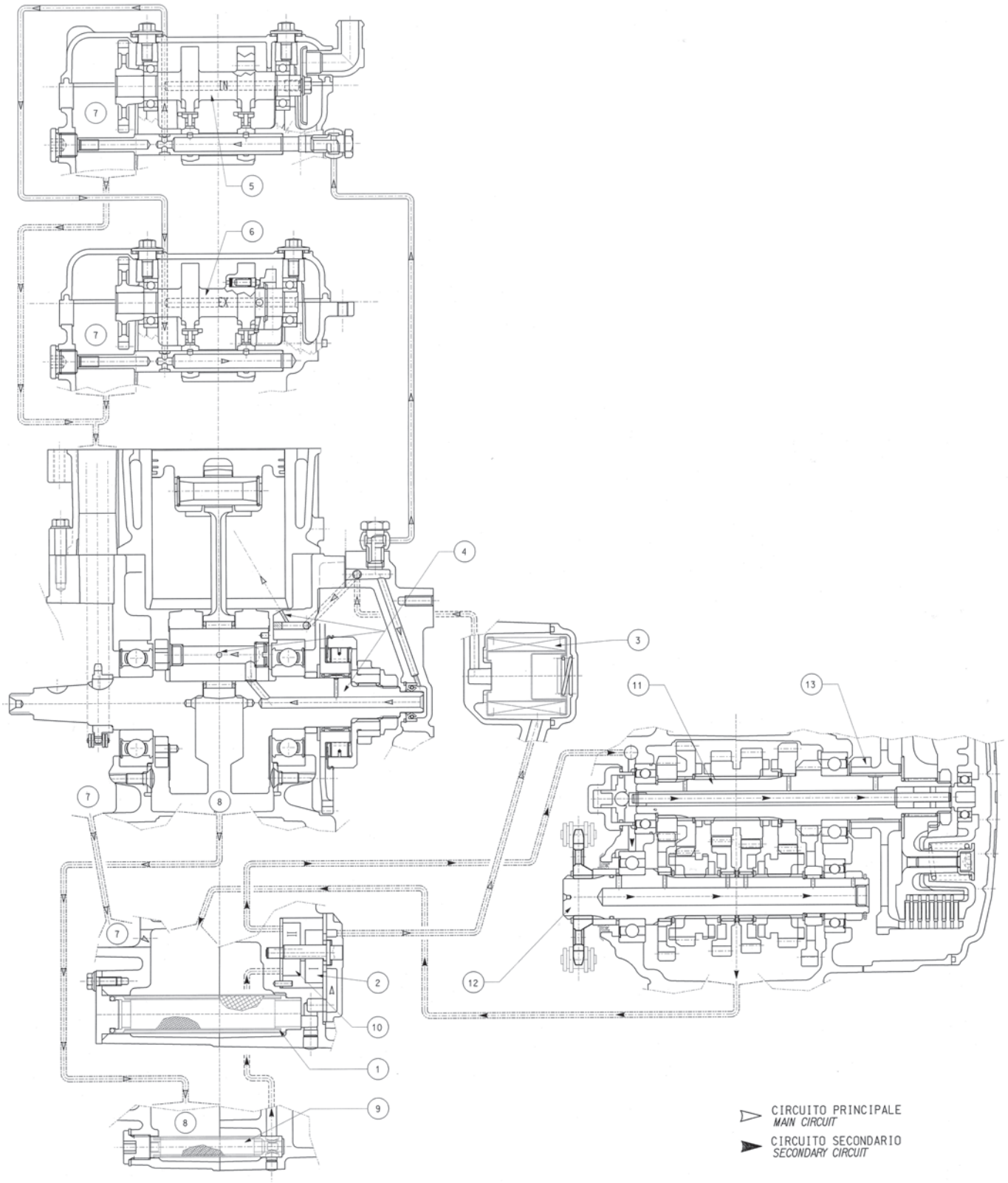

Section W

SPECIAL TOOLS

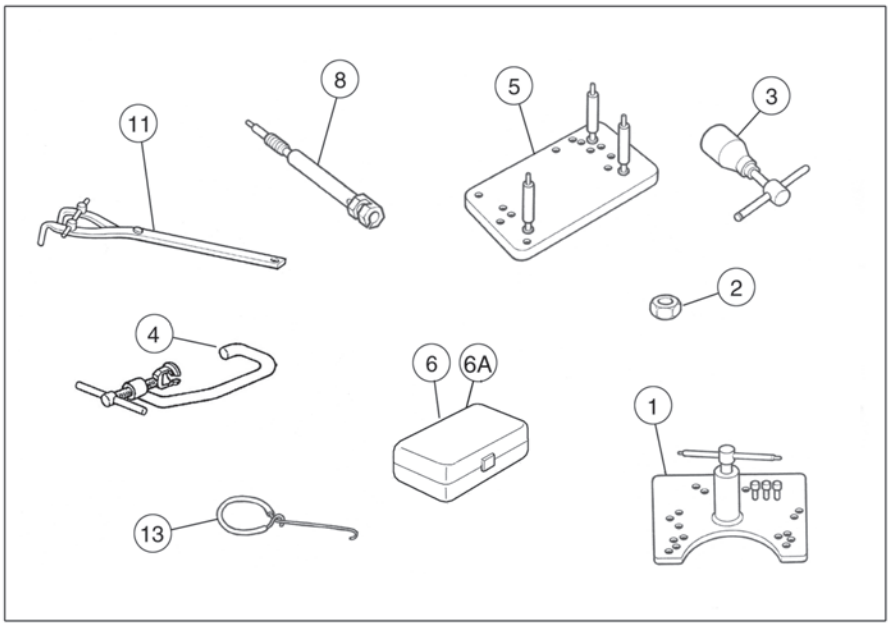

1- (**1517 94702**) Crankcase puller

2- (**8000 A1580**) Crankshaft guard

3- (**8000 A1559**) Flywheel extractor (TC-TXC)

3- (**8000 B0144**) Flywheel extractor (TE-SMR)

4- (**8000 39521**) Valves assembling and removing tool

5- (**8A00 90662**) Support for assy

6- (**8000 A9634**) Diagnosys kit (TE-SMR)

*6A- (**8000 H0237**) Control unit - Reprogramming kit (TE-SMR)

8- (**8000 A1625**) Dial gauge holding tool

11- (**8000 79015**) Clutch hub retaining wrench

13- (**1519 84701**) Spring hook

*Put the vehicle to “RACING CONFIG”, as described in section O (non type-approved vehicle), and use the kit to map the control unit.

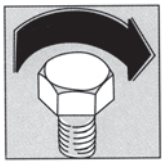

Section X

Tighten all nuts and bolts with a torque wrench at the correct setting. Insufficient tightening of nuts or bolts can cause them to become damaged or loose leading to vehicle damage or injury to the rider. Overtightening a nut or bolt can strip its thread or cause
breakage. The table shows the torque settings for the main nuts and bolts in relation to thread diameter, pitch and use. The above torque settings refer to threads which have been cleaned with solvent.

TORQUE WRENCH SETTINGS

TIGHTENING TORQUES (+/- 5%)

ENGINE

Application

Camshaft cap fastening screw	M6x1	12 Nm	1,2 Kgm	8.7 ft/lb
Rocker arm axle plug	M14x1,5 (+LOCTITE 243)	25 Nm	2,55 Kgm	18.4 ft/lb
Cylinder head cover fastening screw	M6x1	8Nm	0,8 Kgm	5.8ft/lb
Cylinder head fastening nut	M8x1,25	15 Nm	1,5 Kgm	10.8 ft/lb
Cylinder head and cylinder fastening nut	M10x1,5 (+MOLIKOTE HSC)	37 Nm+90°	3.8 Kgm+90°	27.5 ft/lb+90°
Oil hose fastening screw (cylinder head-transmission cover)	M10x1	15 Nm	1,5 Kgm	10.8 ft/lb
Cooling pipe connection on cylinder	M14x1,5 (+LOCTITE 542)	25 Nm	2,55 Kgm	18.4 ft/lb
Water temperature sensor (TE-SMR)	M10x1,25	5 Nm	0,5 Kgm	3.6 ft/lb
Plug for water temperature sensor hole (TC-TXC)	M8x1,25	8 Nm	0,8 Kgm	5.8 ft/lb
Rear screw, left cylinder side (USA excluded)	M5x0,8 (+LOCTITE 243)	5 Nm	0,5 Kgm	3.6 ft/lb
Gear selector stopping pin	M10x1,25 (+LOCTITE 601)	15 Nm	1,5 Kgm	10.8 ft/lb
Oil hole plug on conrod pin	M14x1 (+LOCTITE 243)	20 Nm	2 Kgm	14.5 ft/lb
Primary drive driving gear fastening nut	M18x1,25 (+LOCTITE 243)	180 Nm	18 Kgm	130 ft/lb
Centrifugal disc on INTAKE CAMSHAFT fastening screw	M6x1 (+LOCTITE 243)	8 Nm	0,8 Kgm	5.8 ft/lb
Timing chain slider fastening screw	M8x1,25	12 Nm	1,23 Kgm	8.9 ft/lb
Crankcase bearings plates fastening screw	M6x1 (+LOCTITE 272)	11 Nm	1,1 Kgm	7.9 ft/lb
Engine oil drain plug	M16x1,5	25Nm	2,55 Kgm	18.4 ft/lb
Engine oil filter plug	M14x1,5	25Nm	2,55 Kgm	18.4 ft/lb
Engine oil filter cartridge cover fastening screw	M5x0,8 (+LOCTITE 243)	6 Nm	0,6 Kgm	4.3 ft/lb
Oil filling cap	M18x1,5	3 Nm	0,3 Kgm	2.1 ft/lb
Carburetor union fastening screw (TC-TXC)	M4x0,7 (+LOCTITE 272)	3 Nm	0,3 Kgm	2.2 ft/lb
Alternator fastening nut	M12x1	75Nm	7,65 Kgm	55.3 ft/lb
Stator plate fastening screw (TC-TXC)	M6x1 (+LOCTITE 272)	8 Nm	0,8 Kgm	5.8 ft/lb
Stator plate fastening screw (TE-SMR)	M5x0,8 (+LOCTITE 272)	6 Nm	0,6 Kgm	4.3 ft/lb
Starter lever fastening screw	M6x1 (+LOCTITE 272)	8 Nm	0,8 Kgm	5.8 ft/lb
Spark plug	M10x1		(*)	
Pick-up fastening screw	M5x0,8 (+LOCTITE 272)	6 Nm	0,6 Kgm	4.3 ft/lb
Clutch hub and disc housing fastening nut	M18x1	75Nm	7,6 Kgm	55 ft/lb
Starting gears stop plate fastening screw	M6x1 (+LOCTITE 243)	8 Nm	0,8 Kgm	5.8 ft/lb
Gearbox forks driving shaft fastening screw	M8x1,25 (+LOCTITE 243)	20 Nm	2 Kgm	14.5 ft/lb
Gear control click and plate fastening screw	M6x1 (+LOCTITE 243)	8 Nm	0,8 Kgm	5.8 ft/lb
Gear shift position sensor fastening screw	M5x0,8 (+LOCTITE 243)	6Nm	0,6 Kgm	4.3 ft/lb
Water pump rotor fastening nut	M5x0,8 (+LOCTITE 243)	3,9 Nm	0,4 Kgm	2.9 ft/lb
Water pump body fastening screw	M6x1(+LOCTITE 542)	8 Nm	0,8 Kgm	5.8 ft/l
Drive sprocket seal ring plate fastening screw	M5x0,8 (+LOCTITE 243)	6Nm	0,6 Kgm	4.3 ft/lb
Timing chain slider pin fastening screw	M4x0,7	3 Nm	0,3 Kgm	2.2 ft/lb

(*): Apply a little graphite grease to the spark plug thread; fit and screw the spark plug by hand then tighten to the torque of 10÷12 Nm- 7.4÷8.9 ft/lb. Loosen the spark plug then tighten it again to the torque of 10÷12 Nm- 7.4÷8.9 ft/lb.

TORQUE WRENCH SETTINGS

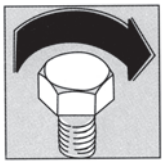

TIGHTENING TORQUES (+/- 5%)

CHASSIS

Application				
Rear frame lower fastening screw	M8x1,25	25,5 Nm	2,6 Kgm	18.8 ft/lb
Engine guard fastening screw	M6x1	14,7 Nm	1,5 Kgm	10.8 ft/lb
Rear chain roller fastening screw	M8x1,25	26,95 Nm	2,75 Kgm	19.9 ft/lb
Side stand fastening screw	M8x1,25 (+LOCTITE 243)	11,75 Nm	1,2 Kgm	8.7 ft/lb
Rear frame upper fastening screw	M8x1,25	25,5 Nm	2,6 Kgm	18.8 ft/lb
Frame to engine plate fastening screw	M8x1,25 (+LOCTITE 270)	35,3 Nm	3,6 Kgm	26 ft/lb
Engine lower fastening screw	M8x1,25	35,3 Nm	3,6 Kgm	26 ft/lb
Clutch and front brake controls clamp fastening screw	M6x1	4,9 Nm	0,5 Kgm	3.6 ft/lb
Throttle control holders fastening screw	M6x1	4,9 Nm	0,5 Kgm	3.6 ft/lb
Front brake hose upper fastening screw (TE, SMR)	M10x1	19 Nm	1,95 Kgm	14 ft/lb
Front brake hose upper fastening screw (TC, TXC)	M10x1	24,7 Nm	2,5 Kgm	18.2 ft/lb
Rear brake control pedal fastening screw	M10x1,25 (+LOCTITE 243)	41,65 Nm	4,25 Kgm	30.7 ft/lb
Rear brake pump fastening screw	M6x1	10,4 Nm	1,05 Kgm	7.7 ft/lb
Front brake pump plate fastening screw (SMR)	M6x1	10,4 Nm	1,05 Kgm	7.7 ft/lb
Rear brake fluid tank fastening screw	M6x1	2,45 Nm	0,25 Kgm	1.8 ft/lb
Rear stop control switch (TE, SMR)	M10x1	19 Nm	1,95 Kgm	14 ft/lb
Front control switch connector fastening screw (SMR)	M2x0,4	0,8 Nm	0,1 Kgm	0,6 ft/lb
Rear brake pedal adjusting cam fastening screw	M6x1	14,7 Nm	1,4 Kgm	10.8 ft/lb
Front brake hose guide plate fastening screw	M6x1	6 Nm	0,6 Kgm	4.4 ft/lb
Front brake tank cap fastening screw (SMR)	M6x1	4,9 Nm	0,5 Kgm	3.6 ft/lb
Front fork legs fastening screw	M8x1,25	25 Nm	2,5 Kgm	18.4 ft/lb
Front wheel axle fastening screw	M6x1	10,4 Nm	1,05 Kgm	7.7 ft/lb
Steering bearings adjusting ring nut	M25x1	3,45 Nm	0,35 Kgm	2.5 ft/lb
Steering pivot fastening nut	M24x1	83,3 Nm	8,5 Kgm	61.4 ft/lb
Handlebar upper clamp	M8x1,25	28,4 Nm	2,9 Kgm	20.9 ft/lb
Handlebar holder fastening screw	M10x1,5	21,1 Nm	2,15 Kgm	15.6 ft/lb
Front fork legs guard fastening screw	M5x0,8	7,85 Nm	0,8 Kgm	5.8 ft/lb
Front fork legs ring guard fastening screw	M5x0,8	2,45 Nm	0,25 Kgm	1.8 ft/lb
Rear swing arm axle fastening nut	M16x1,5 (+LOCTITE 243)	122,5 Nm	12,5 Kgm	90.3 ft/lb
Rear swing arm to rocker arm fastening nut	M12x1,25	80 Nm	8,2 Kgm	59 ft/lb
Tie rod to rocker arm fastening nut	M12x1,25	80 Nm	8,2 Kgm	59 ft/lb

NOTE: If not otherwise specified, standard tightening torques for the following thread				
	M5x0,8	5,6÷6,2 Nm	0,57÷0,63 Kgm	4.1÷4.5 ft/lb
	M6x1	7,6÷8,4 Nm	0,80÷0,85 Kgm	5.8÷6.1 ft/lb
	M8x1,25	24÷26 Nm	2,4÷2,6 Kgm	17.3÷18.8 ft/lb

TORQUE WRENCH SETTINGS

TIGHTENING TORQUES (+/- 5%)

CHASSIS

Application				
Frame to tie rod fastening nut	M12x1,25	80 Nm	8,2 Kgm	59 ft/lb
Rocker arm to tie rod lubricator	M6x1	2,95 Nm	0,3 Kgm	2,2 ft/lb
Rear shock absorber to frame fastening pivot	M10x1,25	52,4 Nm	5,35 Kgm	38,6 ft/lb
Rocker arm to frame fastening pivot	M10x1,25	52,4 Nm	5,35 Kgm	38,6 ft/lb
Chain guide to rear swing arm fastening screw (TE-SMR)	M8x1,25	25 Nm	2,5 Kgm	18.4 ft/lb
Chain guide to rear swing arm front fastening screw (TC)	M8x1,25 (+LOCTITE 243)\	10,4 Nm	1,05 Kgm	7.7 ft/lb
Chain guide to rear swing arm rear fastening screw (TC)	M6x1 (+LOCTITE 243)	10,4 Nm	1,05 Kgm	7.7 ft/lb
Bracket to chain guide fastening screw (TE-SMR)	M6x1 (+LOCTITE 243)	2 Nm	0,2 Kgm	1.5 ft/lb
Chain slider and rear brake hose clamp lower fastening screw	M5x0,8	4,4 Nm	0,45 Kgm	3.2 ft/lb
Chain slider and rear brake hose clamp reear fastening screw (TC-TXC)	M5x0,8	4,4 Nm	0,45 Kgm	3.2 ft/lb
Chain guard fastening screw (TE-SMR)	M5x0,8	4,4 Nm	0,45 Kgm	3.2 ft/lb
Chain adjuster fastening nut	M8x1,25	4,4 Nm	0,45 Kgm	3.2 ft/lb
Spoiler to fuel tank fastening screw	M6x1	6 Nm	0,6 Kgm	4.4 ft/lb
Front number holder upper fastening screw (TC-TXC)	M6x1	6 Nm	0,6 Kgm	4.4 ft/lb
Front number holder lower fastening screw (TC-TXC)	M6x1	10,4 Nm	1,05 Kgm	7.7 ft/lb
Rear shock absorber guard fastening screw	M6x1	6 Nm	0,6 Kgm	4.4 ft/lb
Rear fender front fastening screw	M6x1	10,4 Nm	1,05 Kgm	7.7 ft/lb
Rear fender rear fastening screw	M6x1	6 Nm	0,6 Kgm	4.4 ft/lb
Front fender fastening screw	M6x1	10,4 Nm	1,05 Kgm	7.7 ft/lb
Radiator guard fastening screw	M6x1	6 Nm	0,6 Kgm	4.4 ft/lb
Side panel fastening screw	M6x1	6 Nm	0,6 Kgm	4.4 ft/lb
License plate fastening screw	M6x1	6 Nm	0,6 Kgm	4.4 ft/lb
Rear reflector fastening nut	M4x0,7	1,9 Nm	0,2 Kgm	1.4 ft/lb
Brake hose ring to front fairing fastening screw	ø 3,5	1,9 Nm	0,2 Kgm	1.4 ft/lb
Turn signals fastening screw	M6x1	6 Nm	0,6 Kgm	4.4 ft/lb
Front headlamp fastening screw	ø 3,9	1,45 Nm	0,15 Kgm	1 ft/lb
Electric start remote control switch cables fastening screw	M6x1	10,4 Nm	1,05 Kgm	7.7 ft/lb
Fuel tank front rubber pad fastening screw	M6x1	10,4 Nm	1,05 Kgm	7.7 ft/lb
Fuel cock fastening screw	ø5,5	2,45 Nm	0,25 Kgm	1.8 ft/lb
Fuel tank rear fastening screw	M6x1	10,4 Nm	1,05 Kgm	7.7 ft/lb
Air filter box front fastening screw	M6x1	10,4 Nm	1,05 Kgm	7.7 ft/lb

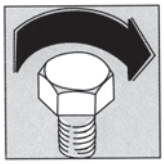

TIGHTENING TORQUES (+/- 5%)

CHASSIS

Application				
Air filter box flange fastening nut	M5x0,8	3,45 Nm	0,35 Kgm	2.5 ft/lb
Front brake caliper fastening screw (TE- TC)	M8x1,25	25,5 Nm	2,6 Kgm	18.8 ft/lb
Brake hoses lower fastening screw	M10x1	19 Nm	1,95 Kgm	14 ft/lb
Front wheel axle fastening screw (SMR)	M10x1,5	51,45 Nm	5,25 Kgm	38 ft/lb
Front brake caliper fastening screw (SMR)	M10x1,5	25,5 Nm	2,6 Kgm	18.8 ft/lb
Brake caliper holding plate to front fork (SMR)	M10x1,5	25,5 Nm	2,6 Kgm	18.8 ft/lb
Front wheel axle fastening screw (TE-TC-TXC)	M20x1,5	51,45 Nm	5,25 Kgm	38 ft/lb
Front brake disc fastening screw (TE-TC-TXC)	M6x1 (LOCTITE 243)	14,7 Nm	1,5 Kgm	1 0.8 ft/lb
Front brake disc fastening screw (SMR)	M8x1,25	34,7 Nm	3,54 Kgm	25.6 ft/lb
Rear brake disc fastening screw	M6x1 (LOCTITE 243)	14,7 Nm	1,5 Kgm	10.8 ft/lb
Front wheel nipple	M4,07x0,75	4,4 Nm	0,45 Kgm	3.2 ft/lb
Rear wheel nipple	M4,5x0,75	4,4 Nm	0,45 Kgm	3.2 ft/lb
Rear wheel sprocket fastening nut	M8x1,25 (+LOCTITE 243)	34,3 Nm	3,5 Kgm	25.3 ft/lb
Rear wheel axle fastening nut	M20x1,5	142,1 Nm	14,5 Kgm	104.8 ft/lb
Drive sprocket cover fastening screw	M6x1	10,4 Nm	1 Kgm	7.7 ft/lb
Exhaust silencer fastening screw	M6x1	10,4 Nm	1 Kgm	7.7 ft/lb
Exhaust pipes to cylinder head fastening screw	M6x1	10,4 Nm	1 Kgm	7.7 ft/lb
Instrument fastening screw	ø4,8	3,45 Nm	0,35 Kgm	2.5 ft/lb
Radiator fastening screw	M6x1	7 Nm	0,72 Kgm	5.2 ft/lb

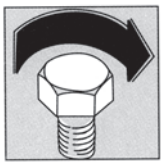

TORQUE WRENCH SETTINGS

NOTE: If not otherwise specified, standard tightening torques for the following thread (+/- 5%)

steel screws on plastic with metal spacer	M4	2 Nm	0,2 Kgm	1.45 ft/lb
steel screws on brass, copper, aluminium	M4	2 Nm	0,2 Kgm	1.45 ft/lb
steel screws on iron, steel	M4	3 Nm	0,3 Kgm	2.2 ft/lb
steel screws on plastic with metal spacer	M5	4 Nm	0,4 Kgm	3 ft/lb
steel screws on brass, copper, aluminium	M5	4 Nm	0,4 Kgm	3 ft/lb
steel screws on iron, steel	M5	6 Nm	0,6 Kgm	4.4 ft/lb
steel screws on plastic with metal spacer	M6	6,5 Nm	0,65 Kgm	4.8 ft/lbb
steel screws on brass, copper, aluminium	M6	6,5 Nm	0,65 Kgm	4.8 ft/lb
steel screws on iron, steel	M6	10,5 Nm	1 Kgm	7.7 ft/lb
steel screws on brass, copper, aluminium	M8	16 Nm	1,6 Kgm	11.8 ft/lb
steel screws on iron, steel	M8	26 Nm	2,6 Kgm	19.1 ft/lb
steel screws on iron, steel	M10	52 Nm	5,2 Kgm	38.3 ft/lb
steel screws on iron, steel	M12	100 Nm	10 Kgm	73.8 ft/lb
steel screws on iron, steel	M14	145 Nm	14,5 Kgm	107 ft/lb

Frame Y.2
Front wheel Y.5
Removing the front wheel Y.6
Reassembling the front wheel Y.8
Rear wheel Y.10
Removing rear wheel Y.11
Wheels overhauling Y.12
Bending the wheel pin Y.12
Wheel spokes Y.13
Rims warpage Y.13
Rear sprocket, transmission sprocket, rear chain Y.14

Section Y

FRAME

The single-beam frame splits approximately at the exhaust level and includes round, rectangular and elliptic section steel pipes; light alloy rear frame. For a rough check, please see the picture. The size indicated enable to see if the frame should be realigned or replaced.

The frames seriously damaged should be replaced.

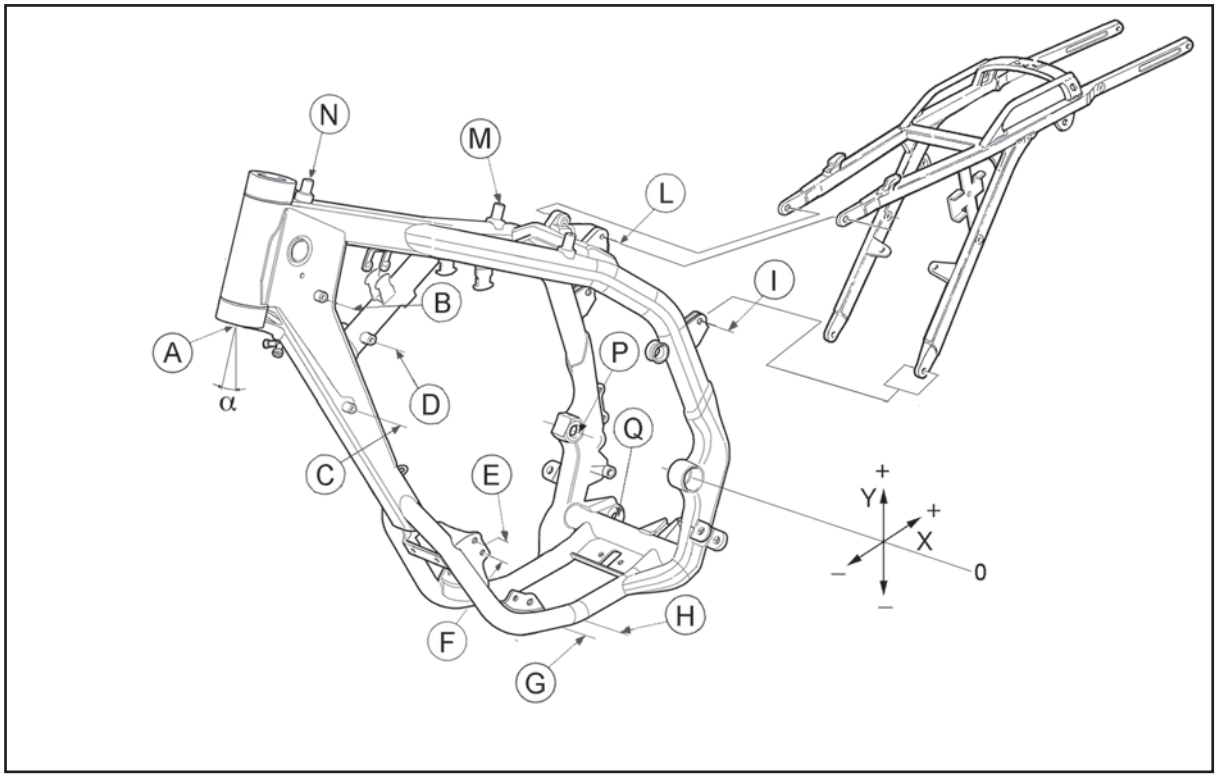

STANDARD mm (in.)

AXIS	"X"	"Y"
A	-576.7 (22.7)	+440.5 (17.34)
B	-460 (18.11)	+423 (16.65)
C	-442 (17.40)	+259 (10.19)
D	-394.2 (15.52)	+337.2 (13.27)
E	-311 (12.24)	+23.2 (0.91)
F	-302.4 (11.9)	+1.8 (0.07)
G	-262.5 (10.33)	-81.5 (3.2)
H	-240.8 (9.48)	-95.9 (3.77)
I	+65.5 (2.57)	+170 (6.69)
L	-20 (0.78)	+335.4 (13.20)
M	-84.8 (3.33)	+374 (14.72)
N	-430,1 (16.93)	+576.1 (22.68)

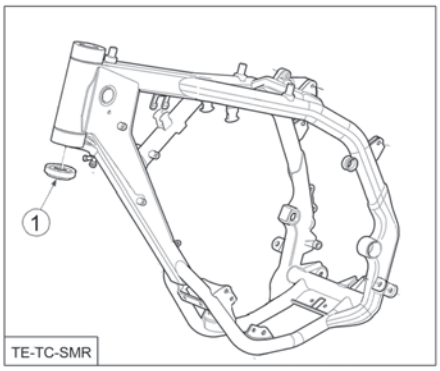

width **P**	215.4 (8.48)
width **Q**	90.2 (3.55)
steering axis angle α	26.5°

LUBRICATION POINTS (LUBRICANT)

1- Steering stem bearings (Grease)

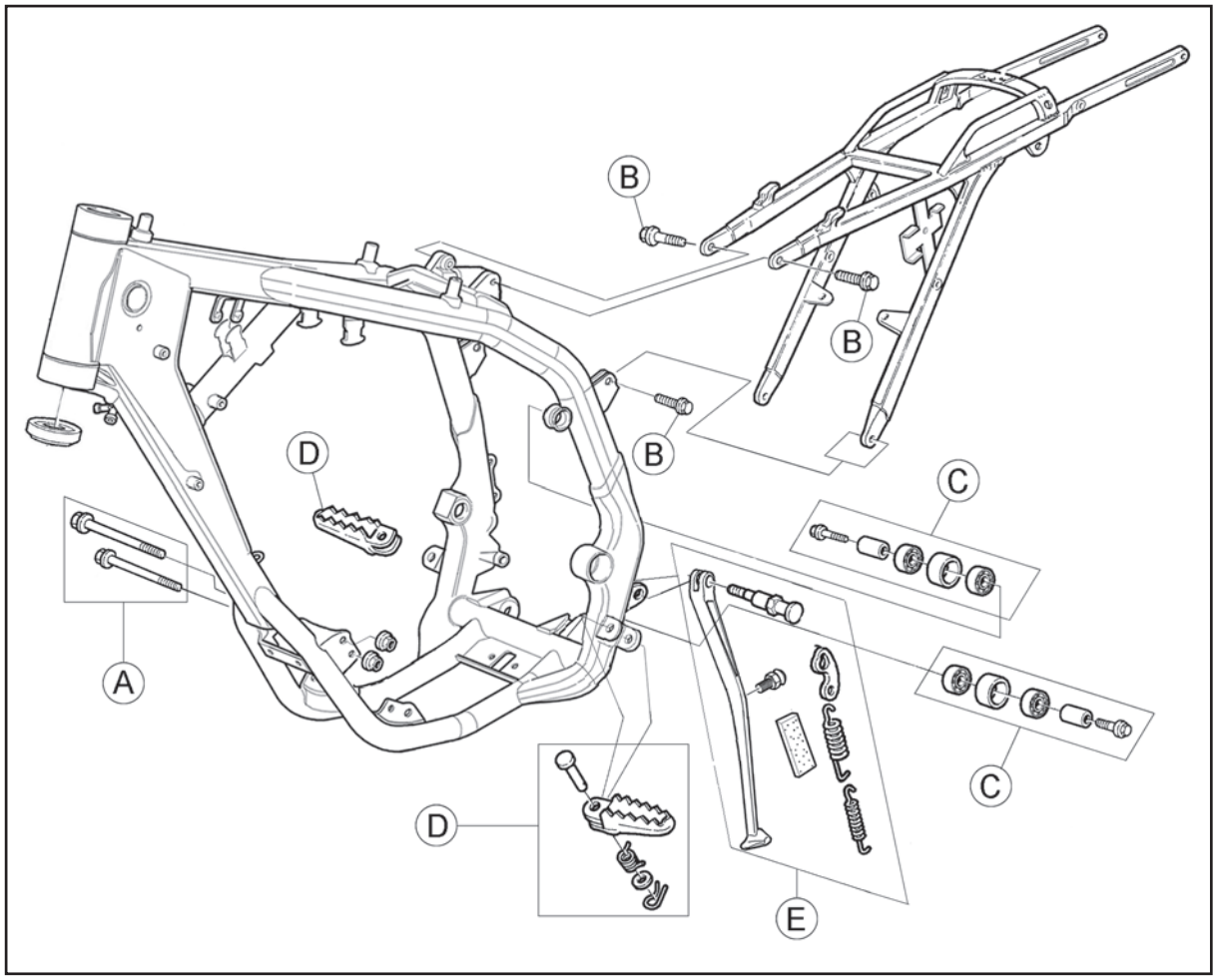

Check the assemblies shown on the picture for wear or failure.
If worn or breaked, replace them.
A. ENGINE FASTENING BOLTS
B. REAR FRAME FASTENING BOLTS
C. CHAIN GUIDE ROLLER-BEARING
D. FOOTRESTS-PIVOTS-SPRINGS
E. SIDE STAND- SPRINGS

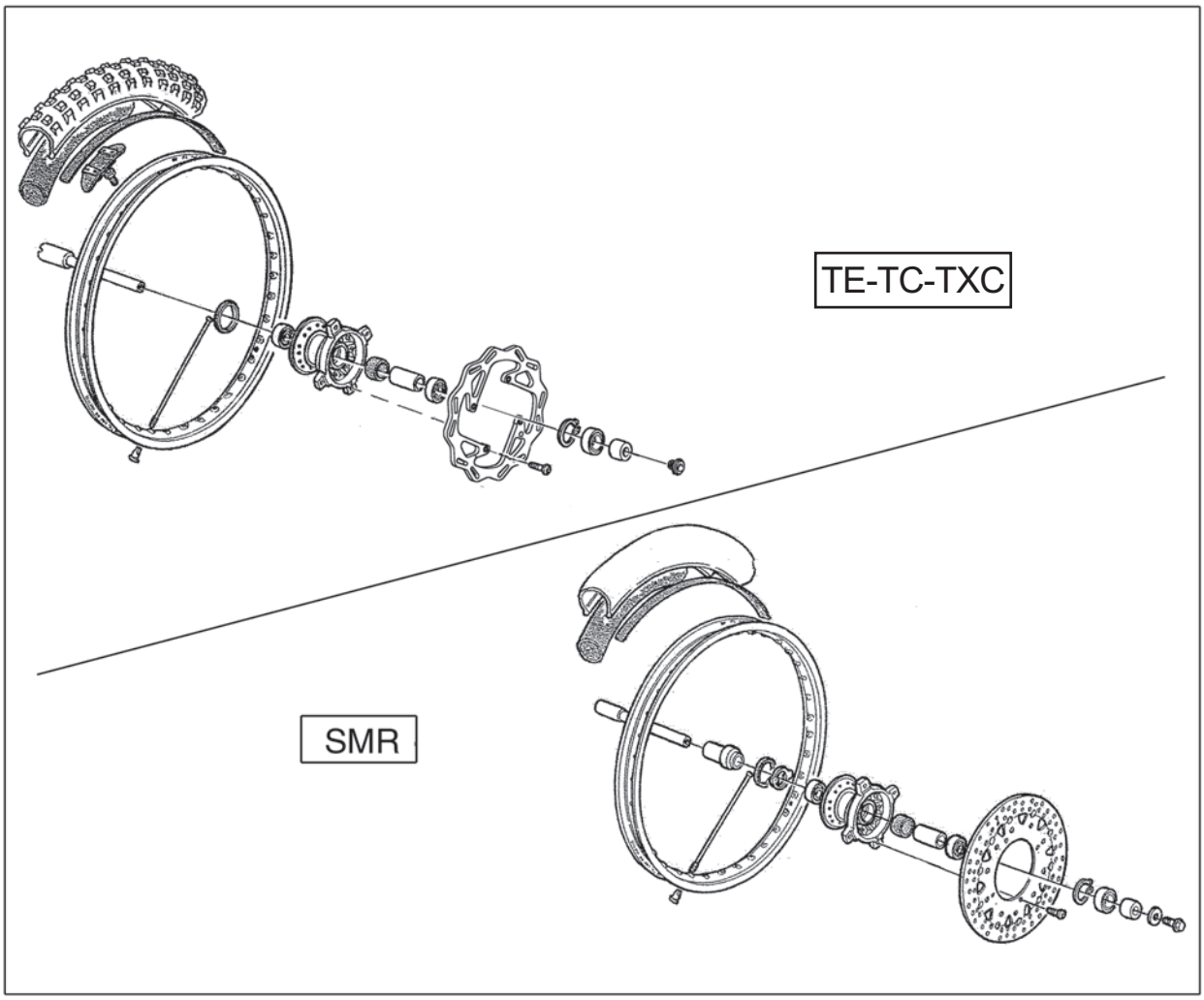

Front wheel

Hub and rim in light alloy with high tensile steel spokes.

Rim make, type and dimension	(TE, TC, TXC) "TAKASAGO"" Excel in light alloy: 1.6x21” (SMR) "SANREMO" in light alloy: 3.50x17”
Tire make, type and dimension	(TE, TXC) "Michelin" ENDURO COMP. 3; "Pirelli" MT 83 Scorpion; "Dunlop" 54R-D907 (TC) "Pirelli" 51R-MT 32A; 80/100 x 21” (SMR) "Pirelli" MTR 21 DRAGON-EVO; 120/70-17”
Cold tire pressure	
(TE- Racing use; TC-TXC)	0.9÷1.0 Kg/cm^2
(TE- Road use)	1.1 Kg/cm^2
(SMR)	1.4 kg/cm^2 (Racing use); 1.8 kg/cm^2 (Road use: driver only); 2.0 kg/cm^2 (Road use: driver and passenger)

Removing the front wheel (pages Y.6-Y.7)
Set a stand or a block under the engine and see that the front wheel is lifted from the ground.

SMR: remove the two screws (A) and the brake caliper.

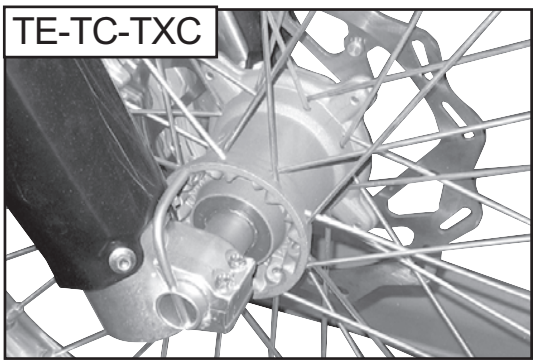

Loosen the screws (1) fastening the wheel axle (2) to the fork rod supports.

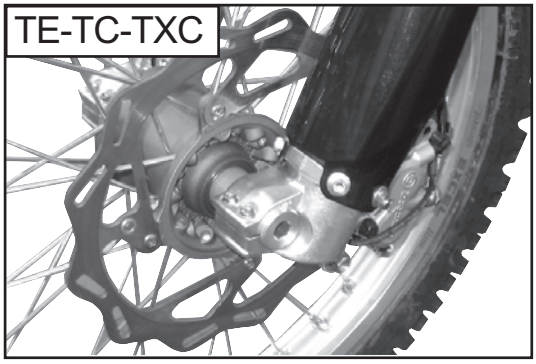

Lock the wheel pin head and at the same time loosen the screw (3) on the opposite side; remove the wheel axle.

- Do not operate the front brake lever when the wheel has been removed; this causes the caliper piston to move outwards.
- After removal, lay down the wheel with brake disc on top.

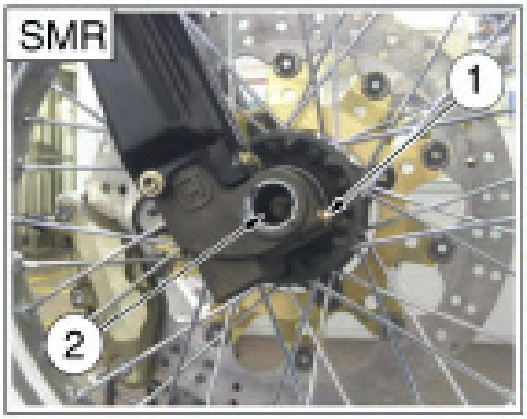

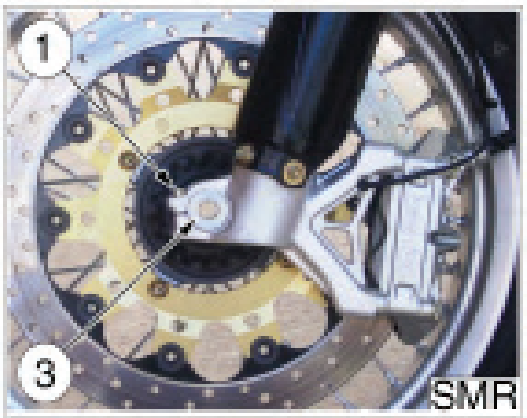

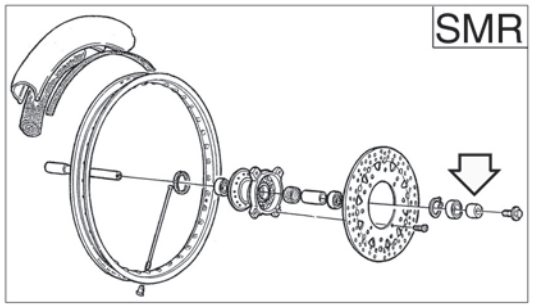

Reassembling the front wheel (pages Y.8-Y.9)
Fit the L.H. spacer on the wheel hub.

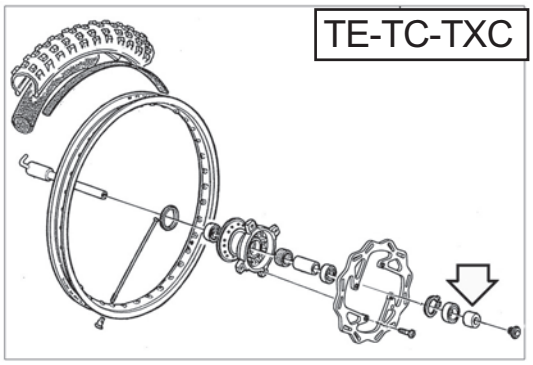

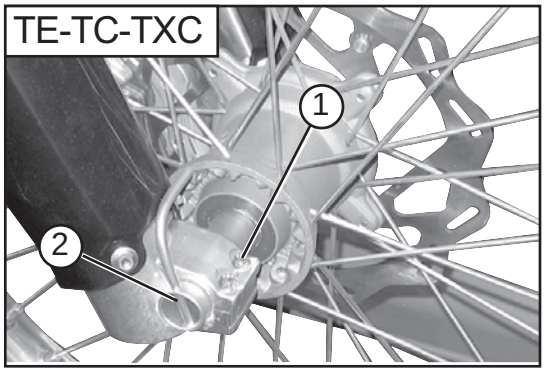

TE-TC-TXC: Fit the wheel between the front fork legs so that the brake disc is fitted into the caliper.

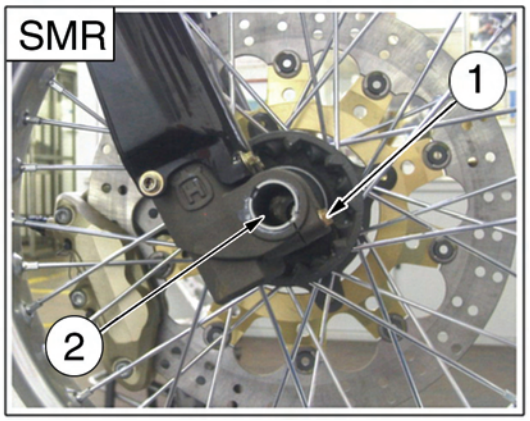

SMR: Fit the wheel between the front fork legs.
Fit the wheel axle (2) from the R.H. side, after greasing it and push it to the stop on the L.H. leg; during this operation, the wheel should be turned.

Tighten the screw (3) on the fork L.H. side but DO NOT lock it. Now, pump for a while, pushing the handlebar downwards until you are sure that the fork legs are perfectly aligned. Lock: the screws (1) on the R.H. leg (10,4 Nm/ 1,05 Kgm/ 7.7 ft-lb), the screw (3) on the L.H. side (51,45 Nm/ 5,25 Kgm/ 38 ft-lb), the screws (1) on the L.H. leg (10,4 Nm/ 1,05 Kgm/ 7.7 ft-lb).

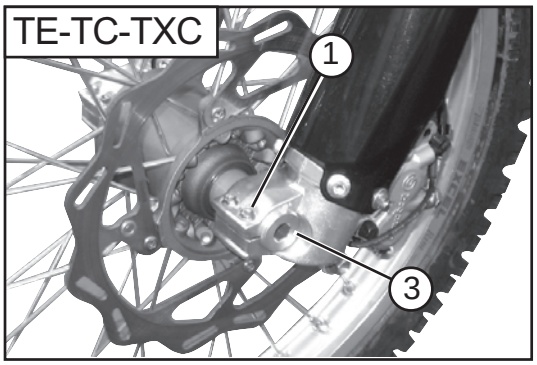

SMR: fit the brake caliper on the disc; assemble the caliper on its holding plate and tighten the screws (A) at 25,5 Nm/ 2,6 Kgm/ 18.8 ft-lb.
Check that the brake disc slides between the caliper pads without any friction. Check the distance between magnet on the brake disc and sensor on the brake caliper (page I. 61).

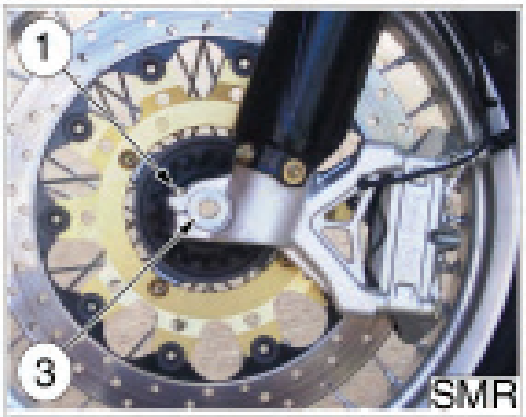

● After reassembly, pump the brake control lever until the pads are against the brake disc.

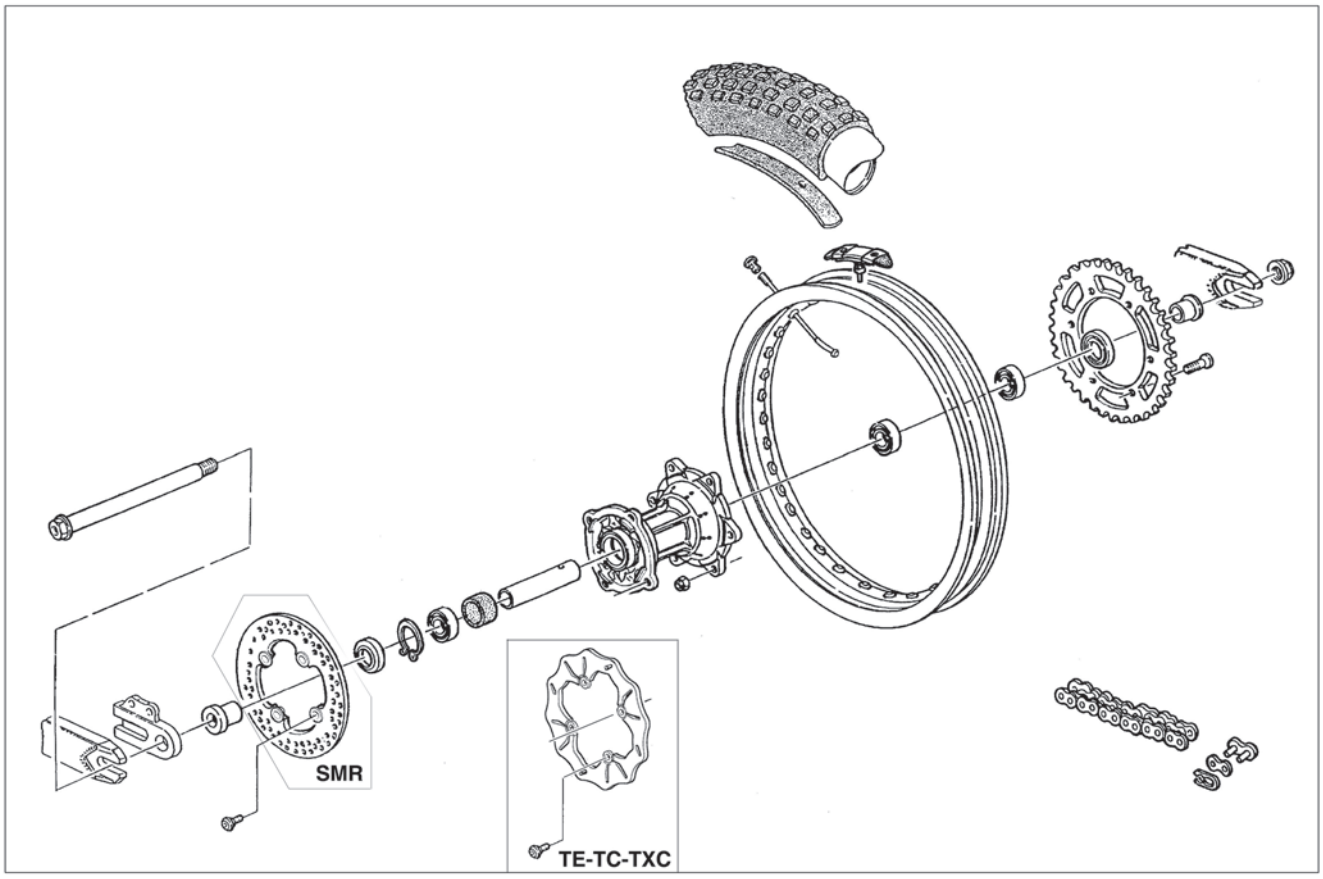

Rear wheel

Hub and rim in light alloy with high tensile steel spokes.

Rim make, type and dimension	(TE, TXC) "TAKASAGO“ Excel in light alloy: 2,15x18” (TC) "TAKASAGO“ Excel” in light alloy: 1,85x19”(250); 2,15x19”(450-510) (SMR) "SANREMO" in light alloy: 4,25x17”
Rim make, type and dimension	(TE, TXC) “Michelin” ENDURO COMP. 3- “Pirelli” MT 83 Scorpion - “Dunlop” 70R-D907; 120/90x18” (250); 140/80x18” (450, 510) (TC) "Pirelli" NHS (62) MT 32; 100/90x19” (250); 110/90x19” (450, 510) (SMR) "Pirelli" MTR 22 DRAGON-EVO; 150/60x17”
Cold tire pressure (TE- Racing use; TC-TXC) (TE- Road use) (SMR)	 0,8÷0,9 Kg/cm^2 1,0 Kg/cm^2 1,6 kg/cm^2 (Racing use); 2,0 kg/cm^2 (Road use: rider only); 2,2 kg/cm^2 (Road use: rider and passenger)

Removing the rear wheel
Set a stand or a block under the engine and see that the rear wheel is lifted from the ground.

Unscrew the nut (1) of the wheel pin (3) and extract it. It is not necessary to unloose the chain adjusters (2); in this way, the chain tension will remain unchanged after the reassembly. Extract the complete rear wheel, by taking care of the spacers located at the hub sides. To reassemble, reverse the above procedure remembering to insert the disc into the caliper.

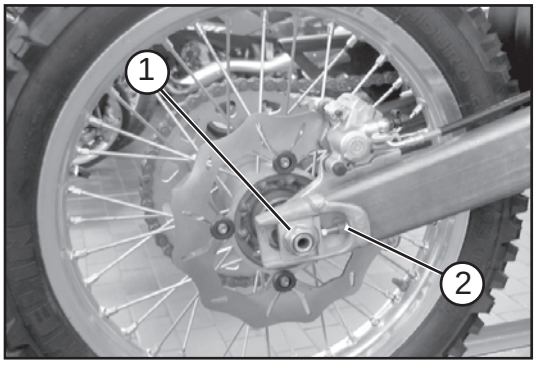

: Do not operate the rear brake pedal when the wheel has been removed; this causes the caliper piston to move outwards.

: After removal, lay down the wheel with brake disc on top.

: After reassembly, pump the brake control pedal until the pads are against the brake disc.

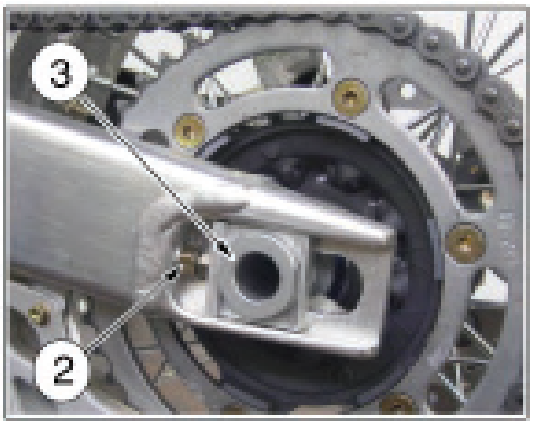

TIGHTENING TORQUES
1: 142.1 Nm/ 14.5 Kgm/ 104.8 ft-lb

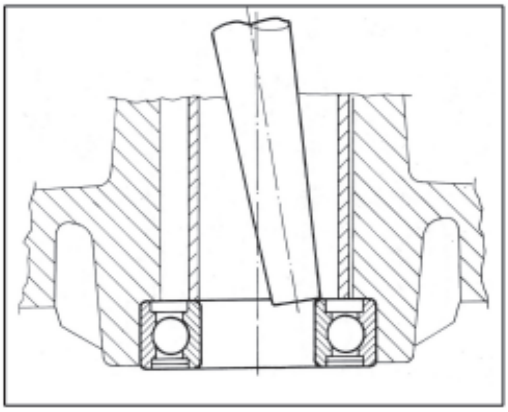

Wheels overhauling

Check the wear state of the hub bearings. In case of excessive clearance (radial and axial), operate as follows:
- lay the hub on a flat holder with hole, allowing for the passage of the removed bearing;
- use a hammer and a pin to exercise pressure only on the bearing inner ring (see figure) up to its removal;
- continuosly change the pressure position so to get an extraction as regular as possible;
- extract the spacer and perform the same operations for the other bearing.

Removed bearings must not be reassembled.

When reassembling new bearings checl the seat. It must be clean and without grooves or scatches. Grease the seat before fitting the bearing, then put it in the seat using a proper tubolar pad, exercising pressure only on the bearing outer ring uo to complete inserting. Place the spacer and the proceed with the placing of the other bearing. Check their alignement by placing the wheel pin.

After every intervention on wheels their balancing is advisable.

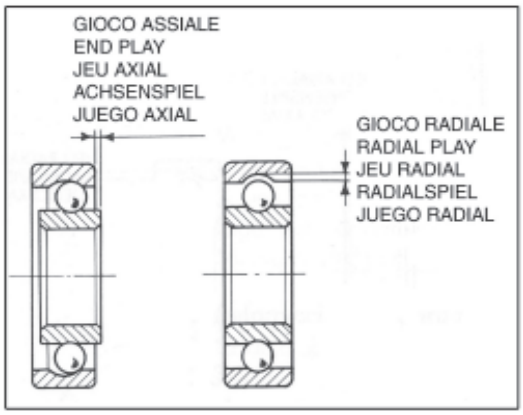

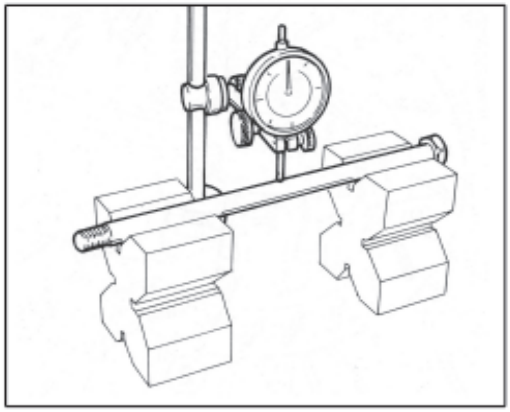

Wheel axle bending

If the bending figure is over the allowable max limit, straighten or replace the axle. If the axle can not the straightened within the prescribed limits, replace it.

Axle out of track 100 mm

Wheel axle	Standard	Max wear limit
Wheel axle	less than 0.004 in.	0,2 mm (0.0078 in.)

WHEEL SPOKES

Check to make sure that all the nipples are tight (4,4 Nm/ 0,45 Kgm/ 3.2 ft-lb); tighten them if necessary.
Remember that an insufficient stretch jeopardizes the motorcycle stability.
For an instant check, use a metal point (for instance, a screwdriver) to beat the spokes with. A live sound accounts for an accurate tightening, while a dull sound means that a new tightening is necessary.

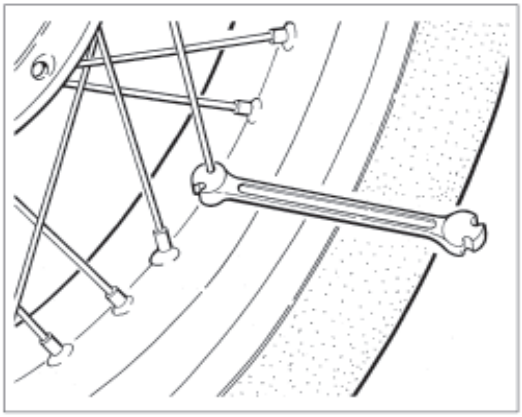

Rims warpage

The table below shows the control value that the wheel rim must be checked. Too much skid and eccentricity are generally caused by any worn bearings. In this case, replace teh bearings. If this operation does not get round this trouble, replace the rim or the wheel.

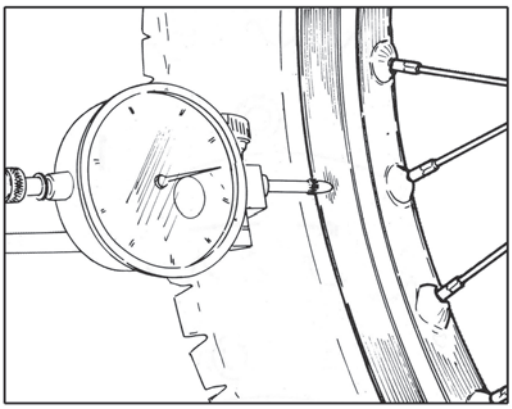

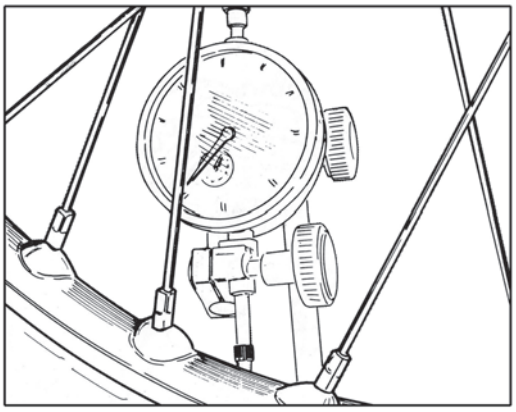

Standard		Max wear limit
Side skid	less than 0.019 in.	2 mm (0.078 in.)
Eccentricity	less than 0.031 in.	

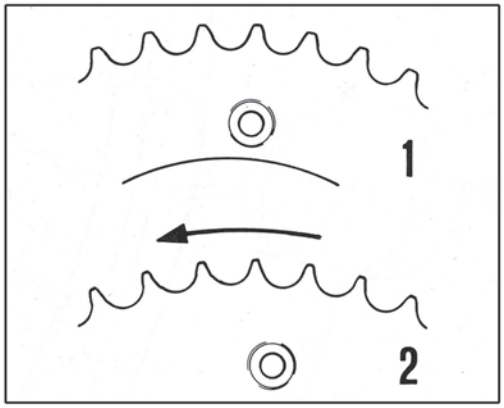

Rear sprocket, transmission sprocket and drive chain
The figure shows the outline of teeth in normal and excessive wear.

1- Normal consumption

2- Excessive consumption

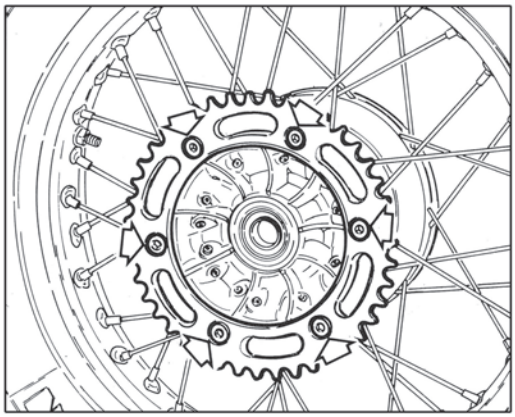

Should the sprocket be badly worn out, replace it by loosening the six fastening screws to the hub.

After every rear sprocket replacement, also replace the drive sprocket and transmission chain.

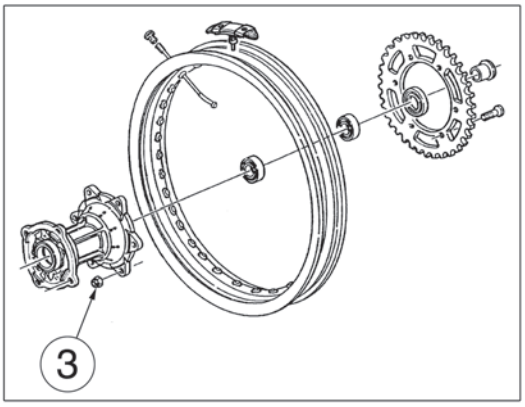

TIGHTENING TORQUES
3: 34.3 Nm/ 3.5 Kgm/ 25.3 ft-lb +LOCTITE 243

CHECKING THE WEAR OF CHAIN, PINION AND SPROCKET
Proceed as follows:
- Fully stretch the chain with the adjusting screws.
- Mark 20 chain links.
- measure the distance “A” between 1st pin center and 21 st pin center.

Check the pinion damages or wear and replace it should the wear degree be as the one shown in figure.

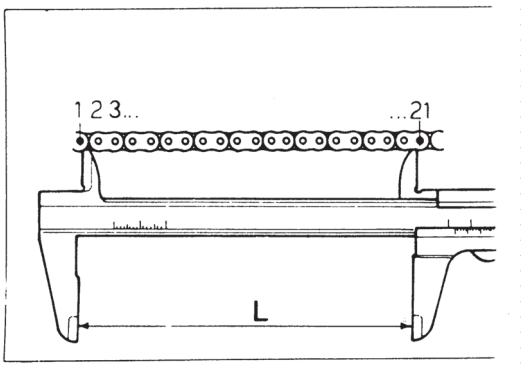

: Misalignment of the wheel will result in abnormal wear and may result in an unsafe riding condition.
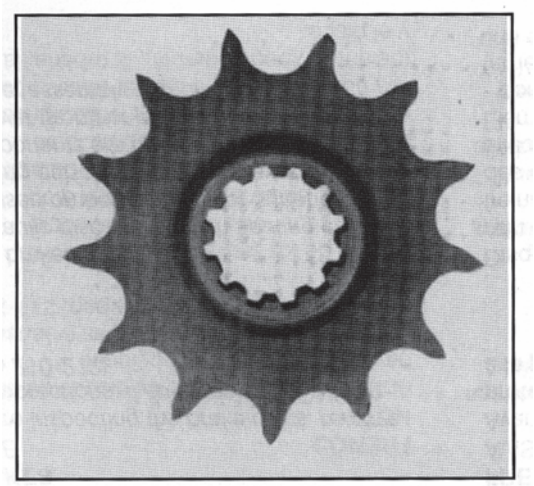
: In muddy and wet conditions, mud sticks to the chain and sprockets resulting in an overtight chain. The pinion, the chain, and the rear sprocket wheel wear increases when running on muddy ground.